STREET SMART PARTS
BY McNEILUS

ALL MAKES PARTS CATALOG

ADVANCE/TEREX®
BECK®
CBMW®
CCB®
JAEGER®
KIMBLE®
LONDON®
MTM®
REX®
ROCKET®
SCHWING®
SMITH®

2019

P/N: 1357952
Rev. 0719

McNeilus®

www.streetsmartparts.com
888.686.7278

© 2015 McNeilus Truck and Manufacturing Inc. McNeilus, the McNeilus logo are registered trademarks and Street Smart Parts is a trademark of McNeilus Truck and Manufacturing Inc., Dodge Center, MN, USA. Oshkosh is a registered trademark of Oshkosh Corporation, Oshkosh, WI, USA. All other designated trademarks are the property of their respective owners.

STREET SMART PARTS BY McNEILUS

ENVIROGUARD CHUTE WASH SYSTEM

WORKING TOGETHER TO CLEAN UP THE INDUSTRY!

The Enviroguard Chute Wash System lets you clean your chutes efficiently, without creating an enviromental hazard. The stone is retained in the lightweight bucket while the cementitious slurry is pumped back into the drum.

Features

- Unit consists of pump, bucket, hoses and all necessary hardware
- Total weight is 100 lbs
- Driver attaches special bucket to chute hooks and washes down chute
- A screen in the bucket catches coarse aggregate for later disposal
- Slurry water, including sand is pumped from bucket into mixer drum (typically 5-8 gallons)
- Pump has been specially modified to reduce wear from abrasives
- All contaminates remain in the truck system
- Custom installation upgrade kits are offered for easy integration to your mixer

888.686.7278
StreetSmartParts.com

McNeilus GET IN.

The specifically designed pump can withstand abrasive sand and cementitious material, while faciliting reuse of slurry in the next load

Chute washing made safe and easy

Benefits

- Installation time is approximately two hours
- Minimal training required for operation
- Everything is installed on the truck, so drivers can wash down anywhere eliminating the disposal cost for contractors
- Wash out time averages the same amount of time as traditional washouts
- System is designed for long-term use, with minimal maintenance required
- Patented in Canada, the United States, Australia, Singapore and Mexico
- Support and installation services throughout the US and Canada.
- Available through all branch locations.

STREET SMART PARTS BY McNEILUS

We offer a complete line of parts and services for *ALL* makes and models! Go to www.StreetSmartParts.com to view and purchase.

888.686.7278
StreetSmartParts.com

McNeilus
GET IN.

Disclaimer:

All information, illustrations, and specifications in this manual are based on the latest information available at the time of publishing. The illustrations used in this manual are intended as representative reference views only. Moreover, because of our continuous product improvement policy, we may modify information, illustrations and/or specifications to explain and/or exemplify a product, service, or maintenance improvement. We reserve the right to make any change at any time without notice.

No part of this publication may be reproduced or used in any form by any means - graphic, electronic, or mechanical, including photocopying, recording, taping, or information storage and retrieval systems without the written permission of McNeilus Truck and Manufacturing, Inc.

For a complete copy of the ANSI Standard contact:
Waste Equipment Technology Association
A Part of the Environmental Industry Associations
4301 Connecticut Avenue, NW • Suite 300
Washington, D.C. 20008
Telephone: 202-244-4700 • Fax: 202-966-4824

For assistance in ordering OSHA Publications contact:
U.S. Department of Labor/OSHA
OSHA Publications
P.O. Box 37535 • Washington, D.C. 20210
Telephone: 202-693-1888 • Fax: 202-693-2498

THIS PAGE INTENTIONALLY LEFT BLANK

Table of Contents

Section Page

1 Specifications and Order Forms....1

2 Chutes....9
- ADVANCE / TEREX....10
- BECK....10
- CBMW....10
- CCB....12
- KIMBLE / K2000....15
- LONDON....17
- MTM....19
- REX....22
- SCHWING....23
- SMITH....24
- CHUTE ACCESSORIES....25

3 Hoppers....29
- ADVANCE / TEREX....30
- BECK....30
- CBMW....31
- CCB....31
- KIMBLE....37
- LONDON....38
- MTM....40
- REX....48
- SCHWING....58
- SMITH....59

4 Collectors....63
- ADVANCE / TEREX....64
- CBMW....64
- CCB....64
- LONDON....65
- MTM....66
- REX....67
- SCHWING....68
- SMITH....68

5 Fenders....71
- ADVANCE / TEREX....72
- CBMW....74
- CCB....76
- KIMBLE....76
- LONDON....78
- MTM....79
- REX....82

Section Page

SCHWING 83
SMITH 84

6 Tanks - Air, Hydraulic, Water 89
ADVANCE / TEREX 90
CBMW 90
CCB 91
LONDON 91
MTM 92
REX 94
SCHWING 94
SMITH 95

7 Axle Parts 99
CCB 100
KIMBLE 102
LONDON 102
MTM 102
REX 103
SCHWING 103
MTM / LONDON 103
HENDRICKSON PUSHER AXLES 104
TAG AXLES 106
AIR BAGS / AIR SPRINGS 107
BRAKES & DUST SHIELDS 118

8 Axle Assemblies 121
TEREX BM Axle 122
Hendrickson Axle 124
Watson Axle Assembly (1 of 3) 126
Watson Axle Assembly (2 of 3) 128
Watson Axle Assembly (3 of 3) 130
Westport Axle Assembly (1 of 4) 132
Westport Axle Assembly (2 of 4) 134
Westport Axle Assembly (3 of 4) 136
Westport Axle Assembly (4 of 4) 138

9 Cylinders 141
ADVANCE / TEREX 142
CCB 142
CBMW 144
KIMBLE 145
LONDON 146
MTM 147
REX 148
SCHWING 150

Section Page

10 Front Pedestal Components 151
CBMW 152
KIMBLE 152
MTM 153

11 Rear Pedestal Components 157
ADVANCE / TEREX 158
CBMW 161
CCB 162
KIMBLE 164
LONDON 167
MTM 171
REX 181
SCHWING 182
SMITH 183
KNEE BRACE ASSEMBLIES 185

12 Chute Pivots, Locks, Swings 189
ADVANCE / TEREX 190
CBMW 190
CCB 191
LONDON 193
MTM 194
REX 196
SCHWING 197
SMITH 197
ROCKET 198

13 Rollers 201
ADVANCE / TEREX 202
CBMW 203
CCB 204
JAEGER 205
KIMBLE 206
LONDON 207
MTM 208
REX 211
SCHWING 212
SMITH 213

14 Bibs, Boots, Wipers 215
ADVANCE / TEREX 216
CBMW 216
CCB 216
KIMBLE 217
LONDON 217
MTM 218

Section Page
REX 218
SCHWING 219
SMITH 220

15 Electrical and Controls 223
ADVANCE / TEREX 224
CBMW 227
CCB 230
KIMBLE 235
LONDON 235
MTM 238
REX 253
SCHWING 254
SMITH 255
CONTROL CABLES - 3” THROW 257
CONTROL CABLES - 4” THROW 258
THROTTLE CABLES 260
CONTROL CABLE ACCESSORIES 260
HD & HDP SERIES 261
DT SERIES 262
DTM SERIES 262
WEDGE LOCKS 263
DEUTSCH ACCESSORIES 264
WEATHER PACK 266
RUBBER PANEL GROMMETS 268
LIGHT ASSEMBLY GROMMETS 271

16 Air and Water Valves, Regulators, Gauges 273
ADVANCE / TEREX 274
CBMW 276
CCB 277
KIMBLE 281
LONDON 281
MTM 282
REX 288
SMITH 289
BALL VALVES 290
GATE VALVES 291

17 Bearings, Bushings, Pins 293
ADVANCE / TEREX 294
CBMW 295
CCB 295
KIMBLE 299
LONDON 300
MTM 301

Section Page
REX ... 309
SCHWING ... 313
SMITH ... 313

18 Hydraulic Valves, Blocks, Regulators, Gauges ... 315
ADVANCE / TEREX ... 316
CCB ... 316
KIMBLE ... 318
LONDON ... 324
MTM ... 325
REX ... 331
SCHWING ... 333
SMITH ... 340

19 Manifold Assemblies ... 343
CBMW ... 344
KIMBLE H10-25500-01 ... 346
KIMBLE H10-25500-00 ... 348

20 Filters ... 351
ADVANCE / TEREX ... 352
CCB ... 353
KIMBLE ... 354
MTM ... 355
REX ... 357
SCHWING ... 358
SMITH ... 358

21 Hydrostatic ... 361
EATON STANDARD PUMPS ... 362
EATON A-PAD PUMPS ... 362
EATON DUAL ELEMENT PUMPS ... 363
EATON MOTORS ... 363
SUNSTRAND ... 364
A-PAD PISTON PUMPS ... 365
SEAL KITS & GASKETS ... 367
PTO SHAFT ACCESSORIES ... 370
PTO SHAFTS ... 374
PTO ADAPTERS ... 379
GEARBOX / MOTOR ADAPTERS ... 382

22 Control Valves ... 385
MTM ... 386
KIMBLE ... 390
SCHWING ... 391

23 Gearboxes ... 393
ZF MODEL P-5300 ... 394

Section **Page**

ZF MODEL P-5300 (Continued) 396
ZF MODEL P-6300 398
ZF MODEL P-6300 (Continued) 400
ZF MODEL P-7300 402
ZF MODEL P-7300 (Continued) 404
ZF MODEL PK-6500 406
ZF MODEL PK-6500 (Continued) 408
ZF MODEL PK-7500 410
ZF MODEL PK-7500 (Continued) 412
CHALLENGE MODEL 08 (12 BOLT) 414
CHALLENGE MODEL 08 (12 BOLT) (Continued) 416
CHALLENGE MODEL 08 (24 BOLT) 418
CHALLENGE MODEL 08 (24 BOLT) (Continued) 420
CHALLENGE MODEL 8YH 422
CHALLENGE MODEL 8YH (Continued) 424

24 Chute Lifters 427

M-719 DYNA CHUTE 428
M-721 DYNA CHUTE 430
M-723 DYNA CHUTE 432

25 Brackets 435

ADVANCE / TEREX 436
CBMW 438
CCB 438
KIMBLE 440
LONDON 442
MTM 447
REX 460
SMITH 464
PUMP MOUNTS & PTO COVERS 465
PEDESTAL MOUNTING ANGLES 471

26 Accessories 479

DRIVE SOCKETS 480
HOOKS 480
MOUNTING HARDWARE 481
MUDFLAPS 481
RUBBER PADS & STRIPS 481
TOOL BOXES 482

27 Index 485

THIS PAGE INTENTIONALLY LEFT BLANK

THIS PAGE INTENTIONALLY LEFT BLANK

Specifications and Order Forms

1

STREET SMART PARTS BY McNEILUS

McNEILUS GLIDER KIT

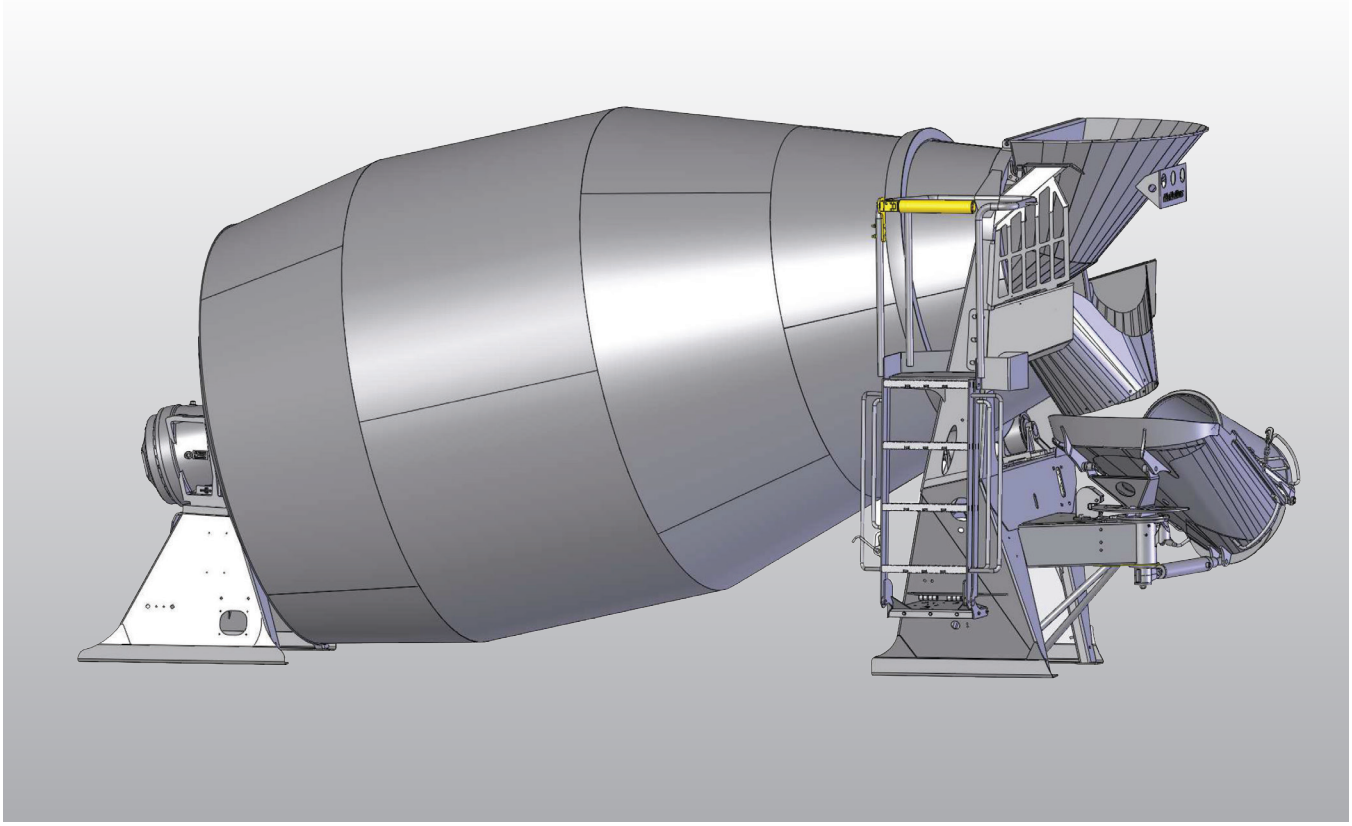

EXPECT THE BEST

Update your fleet with the quality you have come to expect.

- New McNeilus Street Smart Parts™ drum assembly
- Complete rear pedestal includes: roller assemblies, hoop, manual chute lock, hopper, collector with bib, chute cylinder, washout guard, platforms, and ladder assembly
- Full set of chutes included: pivot arm, main chute and fold over chute
- Front pedestal to accept ZF gearbox.
- Includes new P7300 or P7500 ZF gearbox (not shown)
- Prime painted and many other paint options available

888.686.7278
StreetSmartParts.com

McNeilus GET IN.

THE DIFFERENCE IS WITHIN. DEMAND MORE FROM YOUR DRUM.

LEGENDARY QUALITY AND PERFORMANCE

MANY OPTIONS AVAILABLE FOR ALL MAKES AND MODELS

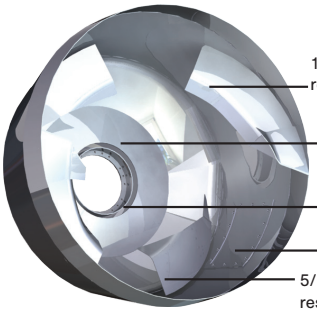

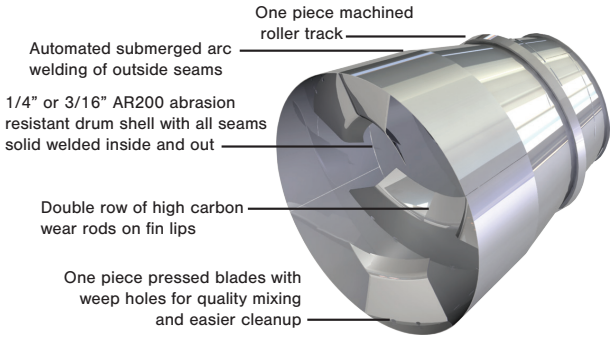

STREET SMART BY McNEILUS

We offer a complete line of parts and services for *ALL* makes and models! Go to www.StreetSmartParts.com to view and purchase.

McNeilus GET IN.

Learn more at www.StreetSmartParts.com

© 2016 McNeilus Truck & Manufacturing, Inc. McNeilus and the McNeilus logo are trademarks of McNeilus Truck & Manufacturing, Inc., Dodge Center, MN, USA. All other designated trademarks are the property of their respective owners. Specifications, descriptions and illustrations in this brochure are accurate as shown at the time of publication, but are subject to change without notice. Illustrations may include optional equipment and accessories and may not include all standard equipment.

PN:

REPLACEMENT DRUM ORDER SPEC SHEET (FRONT)

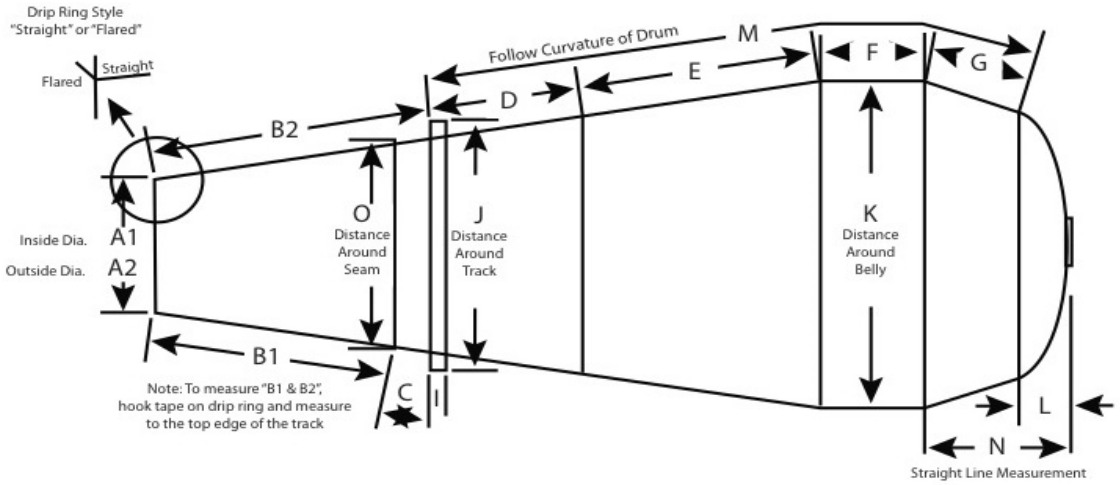

Dimensions:

A1 _____
A2 _____
B1 _____
B2 _____
C _____
D _____
E _____
F _____
G _____
I _____
J _____
K _____
L _____
M _____
N _____
O _____

Part # _____
Approval # _____
McNeilus Branch _____
Sales Person _____

Number of Bolts in Flange _____
Type of Mixer Drive _____
Model of Mixer Drive _____

Mixer Serial Number _____
Mixer Model _____
Mixer Size _____
Unit No. _____
Customer Name _____
Street Address _____
City _____
State, Zip _____
Phone _____
Contact _____

Quantity of drums this measurement sheet _____

Central Water Injection
☐ Yes ☐ No

Drum Shell Thickness Desired
☐ 3/16" Std. ☐ 1/4"

Fin Thickness Desired
☐ 3/16" ☐ 1/4"

If you have any questions concerning this measurement sheet or McNeilus Replacment Drums, please feel free to contact your conveniently located McNeilus branch.

CALL TOLL-FREE 24/7: 888-686-7278 TO ORDER A GENUINE MTM REPLACEMENT DRUM

REPLACEMENT DRUM ORDER SPEC SHEET (STANDARD)

STREET SMART SERVICE BY McNEILUS

Dimensions:

A _____
B _____
C _____
D _____
E _____
F _____
G _____
H _____
I _____
J _____
K _____
L _____

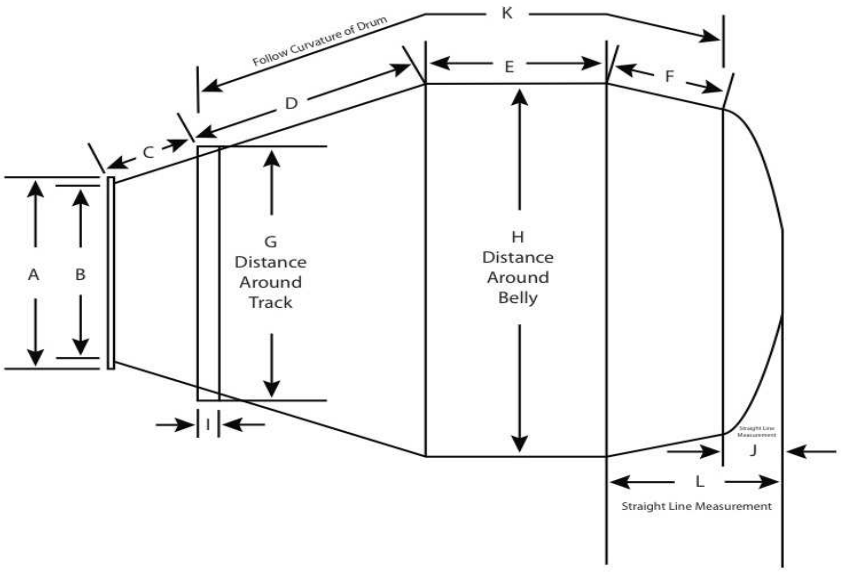

Part # _____
Approval # _____
McNeilus Branch _____
Sales Person _____

If Direct Drive:

Number of bolts in Flange _____
Type of Transmission _____

Quantity of drums this measurement sheet _____

Mixer Serial Number _____
Mixer Model _____
Mixer Size _____
Unit No. _____
Customer Name _____
Street Address _____
City _____
State, Zip _____
Phone _____
Contact _____

Options:

Fin Thickness Desired
☐ 3/16' ☐ 1/4"

Drum Shell Thickness Desired
☐ 3/16" Std. ☐ 1/4"

Front Water Injection
☐ Yes ☐ No

Hatch Option
☐ Quick Hatch ☐ Twin

Paving Fins
☐ Yes ☐ No

If you have any questions concerning this measurement sheet or McNeilus Replacment Drums, please feel free to contact your conveniently located McNeilus branch listed above.

CALL TOLL-FREE 24/7: 888-686-7278 TO ORDER A GENUINE MTM REPLACEMENT DRUM

REPLACEMENT DRUM ORDER SPEC SHEET (COMPOUND REAR CONE)

STREET SMART SERVICE BY McNEILUS

Dimensions:

A _____
B _____
C _____
D _____
E _____
F _____
G _____
H _____
I _____
J _____
K _____
L _____
M _____

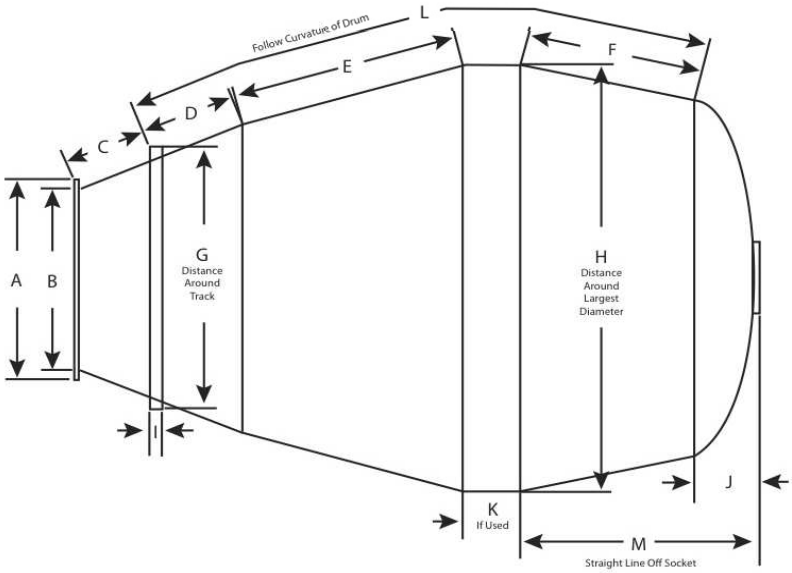

Part # _____
Approval # _____
McNeilus Branch _____
Sales Person _____

If Direct Drive:

Number of bolts in Flange _____
Type of Transmission _____

Quantity of drums this measurement sheet _____

Mixer Serial Number _____
Mixer Model _____
Mixer Size _____
Unit No. _____
Customer Name _____
Street Address _____
City _____
State, Zip _____
Phone _____
Contact _____

Options:

Fin Thickness Desired
☐ 3/16" ☐ 1/4"

Drum Shell Thickness Desired
☐ 3/16" Std. ☐ 1/4" Optional

Front Water Injection
☐ Yes ☐ No

Hatch Option
☐ Quick Hatch ☐ Twin Hatch

Paving Fins
☐ Yes ☐ No

If you have any questions concerning this measurement sheet or McNeilus Replacment Drums, please feel free to contact your conveniently located McNeilus branch.

CALL TOLL-FREE 24/7: 888-686-7278 TO ORDER A GENUINE MTM REPLACEMENT DRUM

REAR PEDESTAL ORDER SHEET

CUSTOMER _____

QTY _____ DATE OF ORDER _____

MIXER SERIAL # _____ YEAR MIXER WAS BUILT _____

42" STD _____ 46" PAVER _____ YARDAGE _____

_____ STANDARD
_____ B/M TYPE "A"
_____ B/M TYPE "B"
_____ B/M TYPE "C"
_____ TUCK -A- WEIGH
_____ STD REVOLUTION PED
_____ BM REVOLUTION PED CHOOSE TYPE A,B,

_____ TYPE III (PRE - '93)
_____ LO-PRO
_____ B/M III ('93 - '99)
_____ CURRENT STD ('93 TO DATE)
_____ CURRENT B/M ('00 TO DATE)

COMPLETE ASSY _____ BARE PEDESTAL _____

MAIN _____ TYPE III
_____ TYPE IV
_____ CURRENT
_____ OTHER

PEDESTAL WIDTH _____ 32-3/4" Narrow
_____ 33-1/4" Wide
_____ 34" Old Style

F/O _____ TYPE III
_____ TYPE IV
_____ CURRENT
_____ OTHER

OPTIONS _____ AIR CHUTE LOCK
_____ TIP UP HOPPER

Ladder _____ 99 & Older
Assy _____ Current Production
(Must have 2" of
clearnace between
ladder platform & fender)

Hopper _____ 99 & Older STD hopper
_____ Current Production STD Hopper
_____ Other (Provide Part #)

_____

CHASSIS WIDTH GUIDE:

Old Style Type III Pre '93			New Style 93-Current		
	STD	B/M		STD	B/M
Ford	34	33 1/4	Ford	33 1/4	33 1/4
Mack	33 1/4	32 3/4	Mack	33 1/4	32 3/4
			(Except Mack Granite's, they are 33 1/4)		
KW	34	33 1/4	KW	33 1/4	33 1/4
IHC	34	33 1/4	IHC	33 1/4	33 1/4
Oshkosh	34	33 1/4	Oshkosh	33 1/4	33 1/4
Pete	34	33 1/4	Pete		
Frt Liner	33 1/4	32 3/4	Frt Liner	33 1/4	32 3/4

McNeilus®

Front Pedestal Spec Sheet

MIXER SERIAL NUMBER _____ HOW THICK ARE ZF PADS? ____

MIXER SIZE _____ YDS

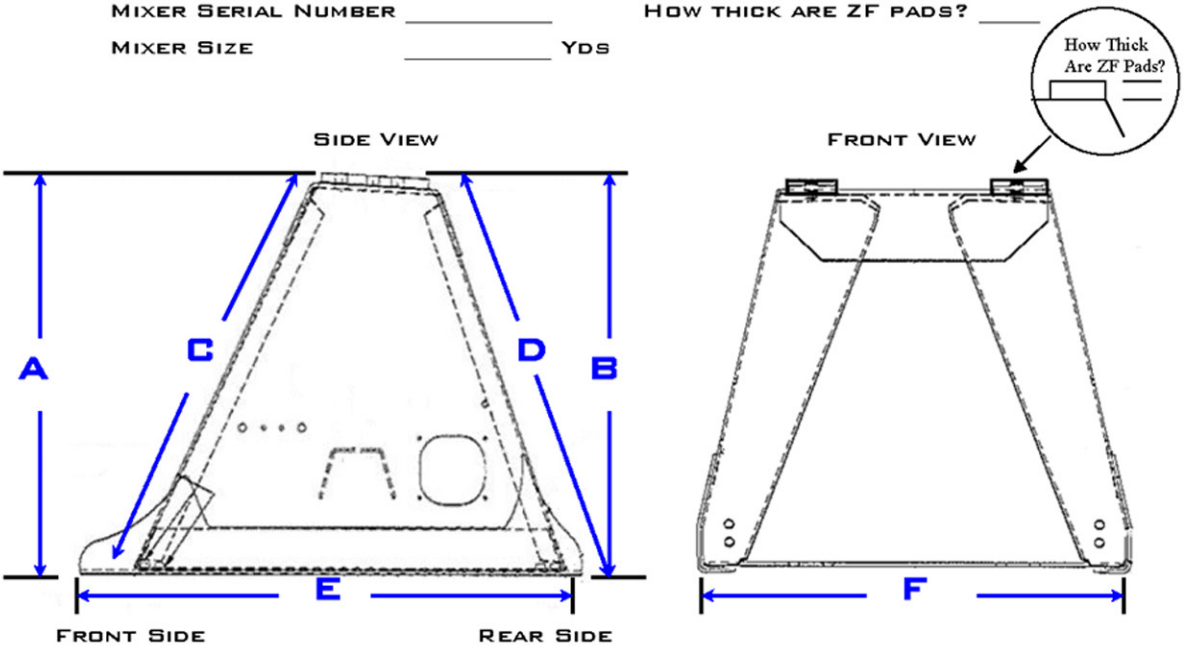

A=___ B=___ C=___ D=___ E=___ F=___

PEDESTAL ANGLE: CIRCLE ONE OF THE FOLLOWING

IS TOP OF PED FLAT SLOPES DOWN TO FRONT SLOPES DOWN TO BACK

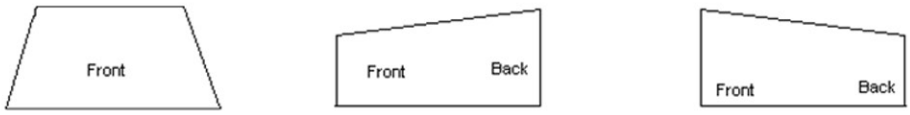

IS HYDRAULIC RESERVOIR BUILT INTO THE FRONT PED? ____ YES OR NO

IS HYDRAULIC RESERVOIR INSIDE & UNDERNEATH THE FRONT PED? ____ YES OR NO

CALL YOUR MCNEILUS PARTS REPRESENTATIVE TOLL FREE AT 888-686-7278

©2007 McNeilus Truck and Manufacturing, Inc. McNeilus and the McNeilus logo are trademarks of McNeilus Truck and Manufacturing, Inc. Dodge Center, MN, USA

Chutes

ADVANCE / TEREX

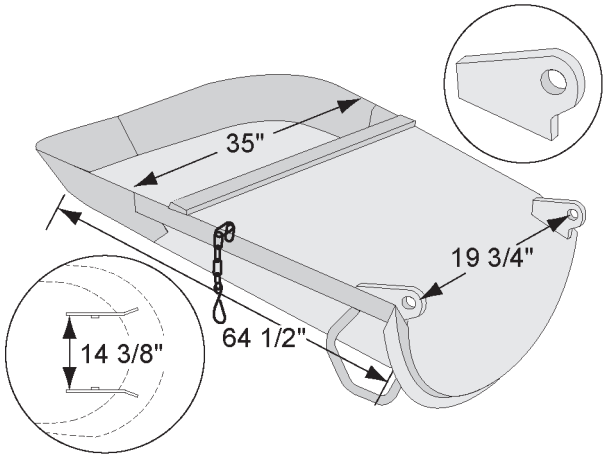

CHUTE - MAIN, 7/8", MOUNT '96

1486307 MTM 40130/41580 TEREX

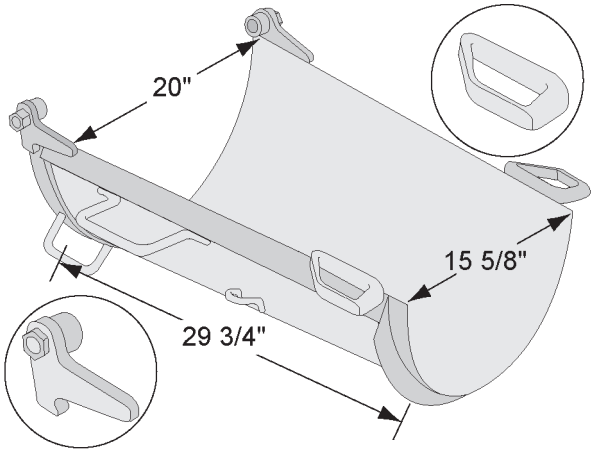

CHUTE - FOLDOVER, 7/8", MOUNT '96

0152630 MTM 40117 TEREX

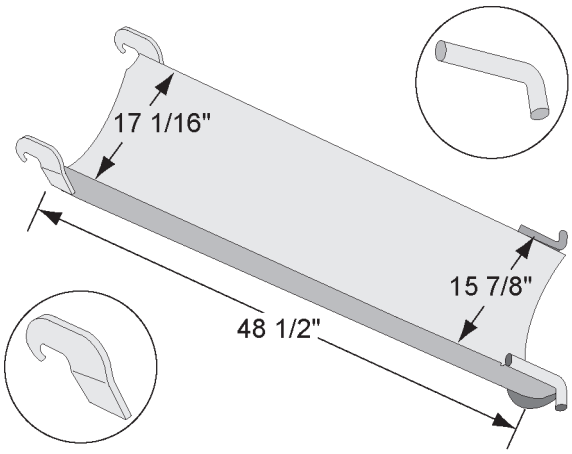

CHUTE - EXTENSION

0151650 MTM 40749 TEREX

BECK

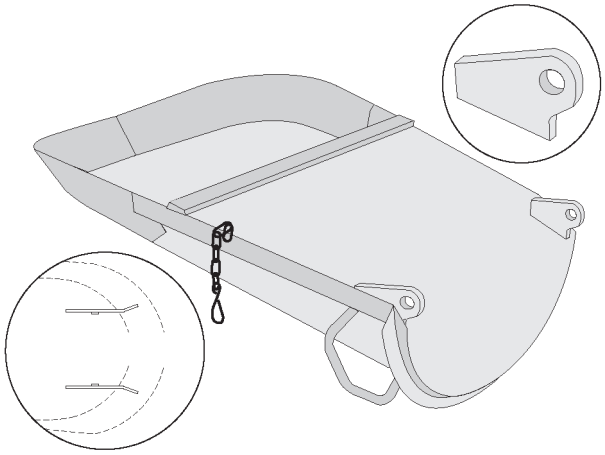

CHUTE - MAIN, SUPER PVR

1467406 MTM 40300 BECK

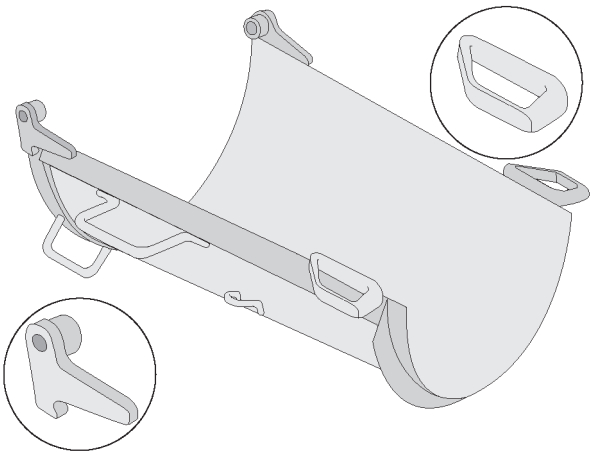

CHUTE - FOLDOVER, STD, 30"

MANU341497 MTM NPN BECK

CBMW

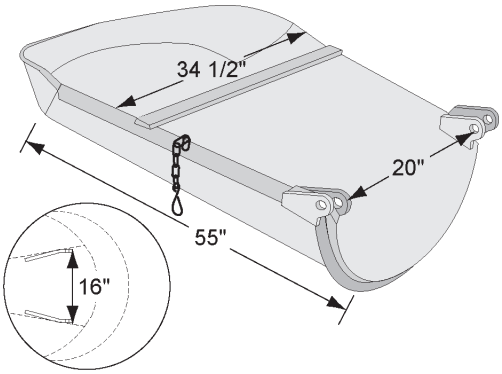

CHUTE - MAIN, '98-'99 STANDARD

1366110 MTM 90512820 CBMW

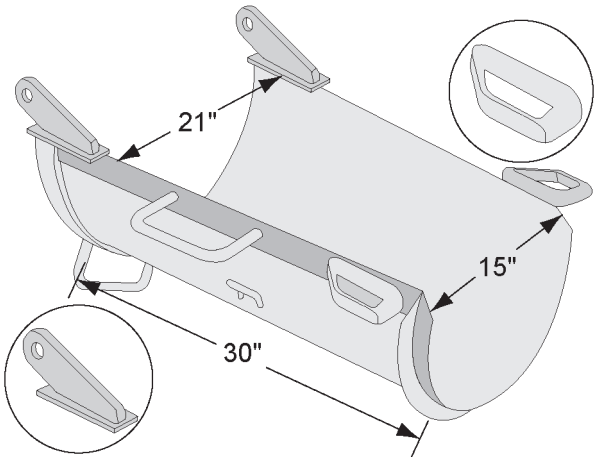

CHUTE - FOLDOVER, STANDARD

0250230 MTM 90522495 CBMW

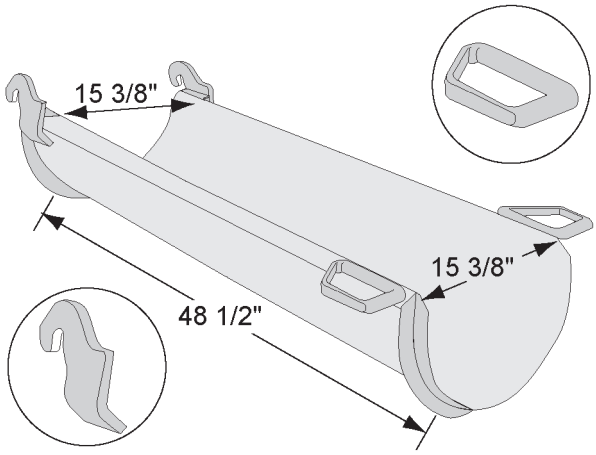

CHUTE - EXTENSION, STANDARD

0250330 MTM 10530092 CBMW

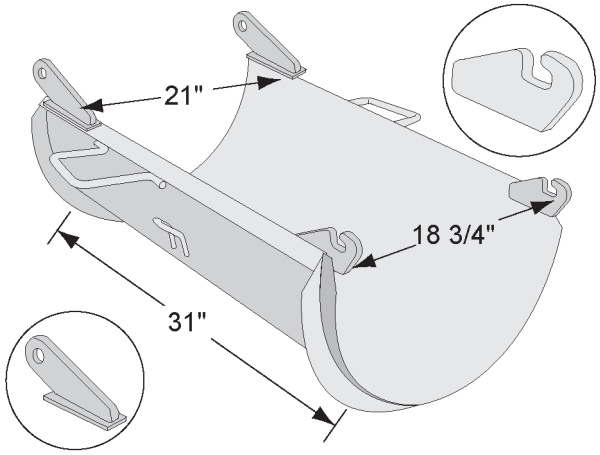

CHUTE - FOLDOVER, WITH LOOP

1140521 MTM 90520108 CBMW

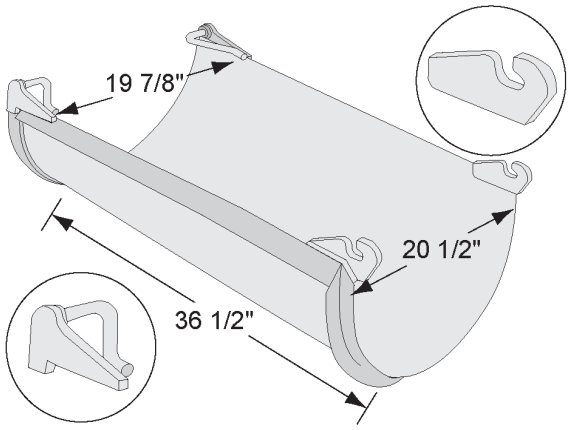

CHUTE - EXTENSION, WITH LOOP

1140522 MTM 90532300 CBMW

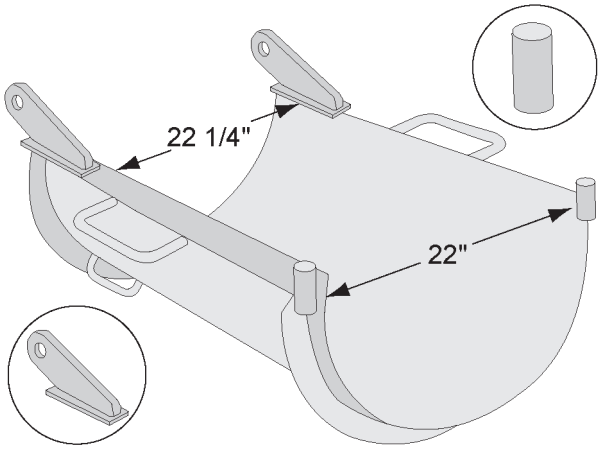

CHUTE - FOLDOVER

0250200 MTM 90522436 CBMW

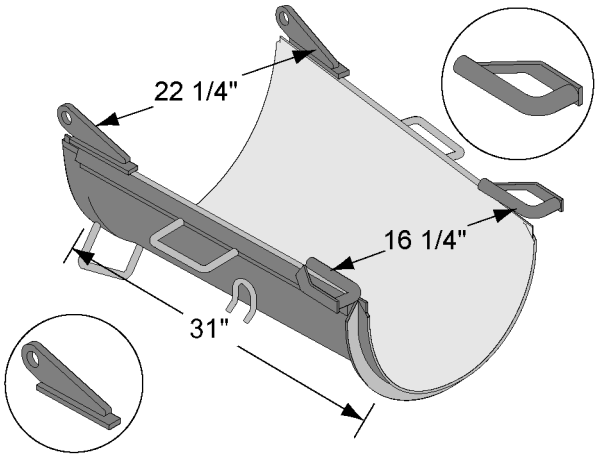

CHUTE - F/O, CBMW STD TO MTM EXT

1365045 MTM 90522489 CBMW

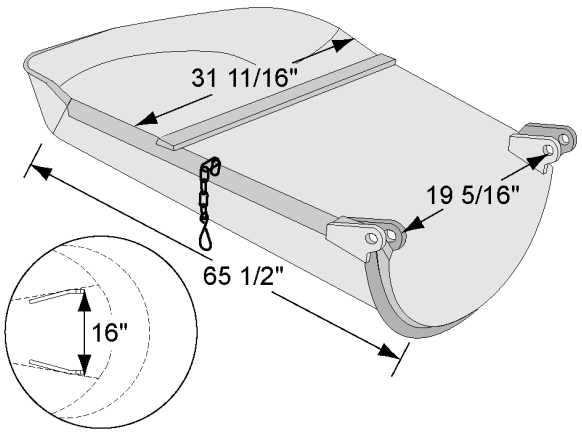

CHUTE - MAIN, CBMW

1366110 MTM 90512820 CBMW

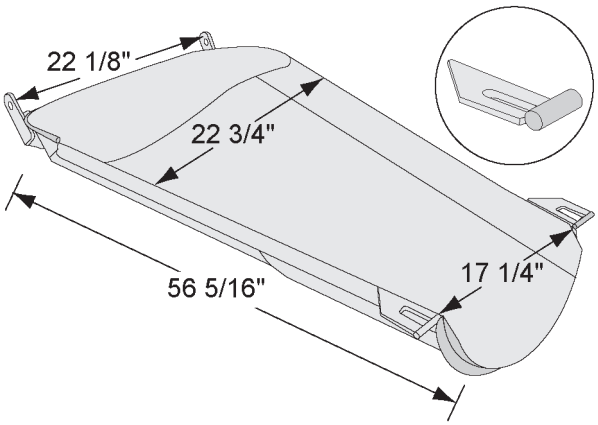

MAIN - S, PACE

0012674 MTM 5042163 CCB

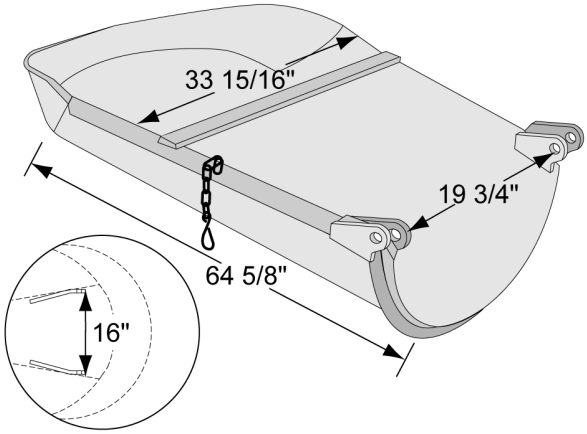

CHUTE - MAIN, CBMW

1366110 MTM 90512820 CBMW

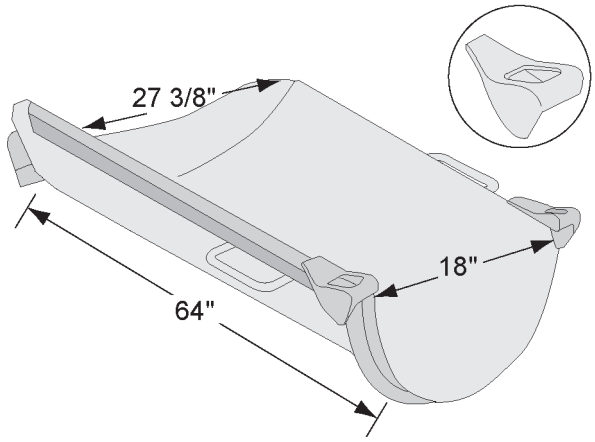

MAIN - BB, CC

0012671 MTM 5044467 CCB

CCB

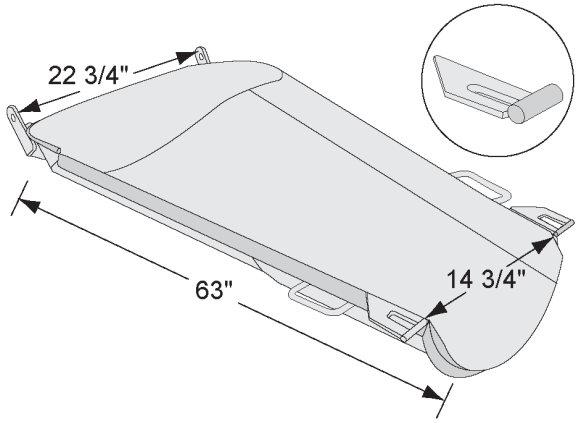

CHUTE - MAIN, BB

0011010 MTM 5042161 CCB

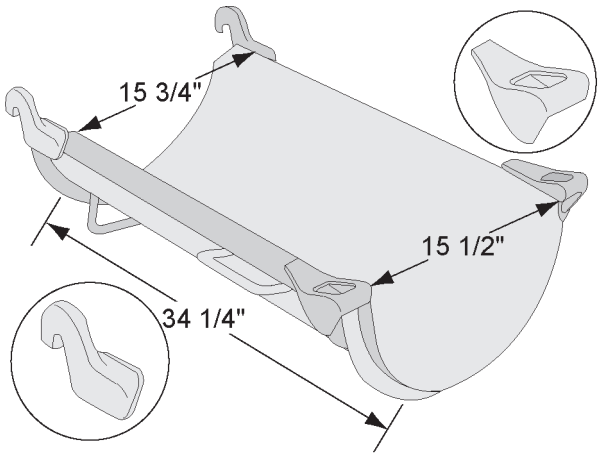

F/O - CAST

0012623 MTM 5043757 CCB

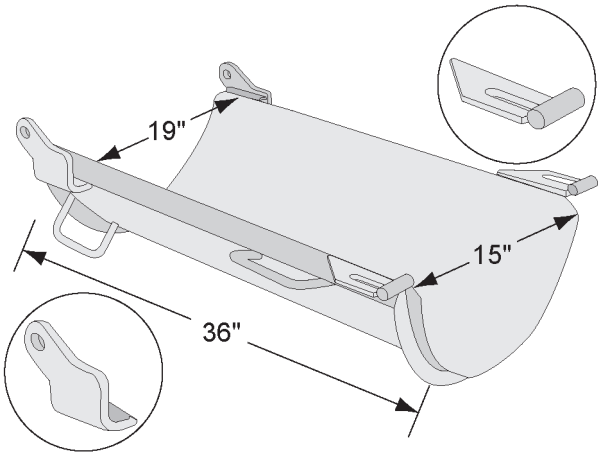

CHUTE - FOLDOVER, FH

0012663 MTM 5042167 CCB

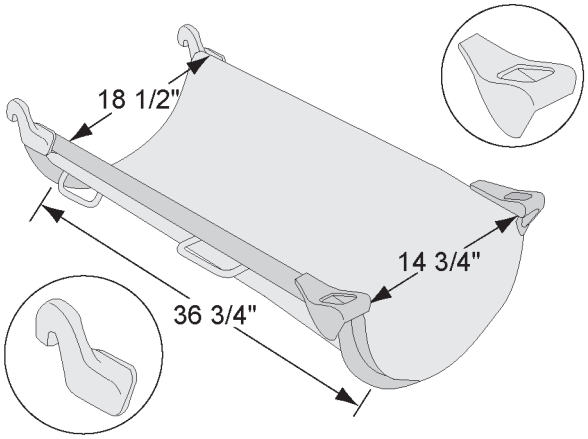

CHUTE - FOLDOVER, CC

0012618 MTM 5043766 CCB

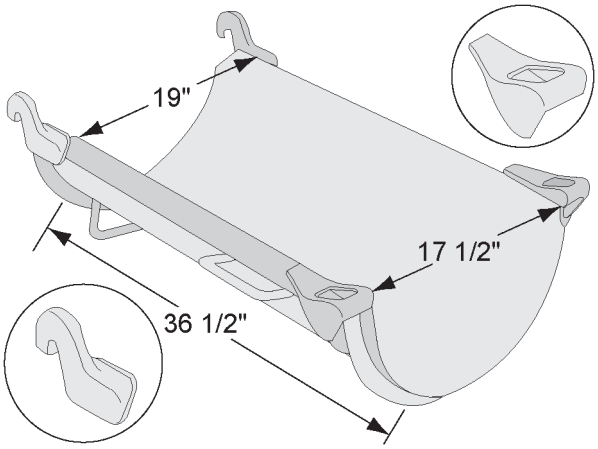

CHUTE - FOLDOVER, CC

0012673 MTM 5043760 CCB

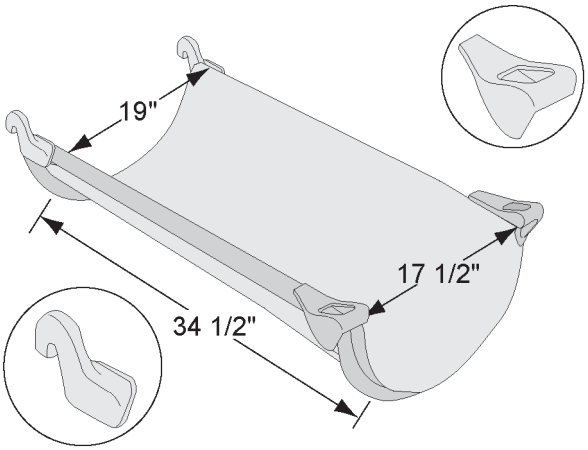

CHUTE - EXTENSION

0012619 MTM 5043739 CCB

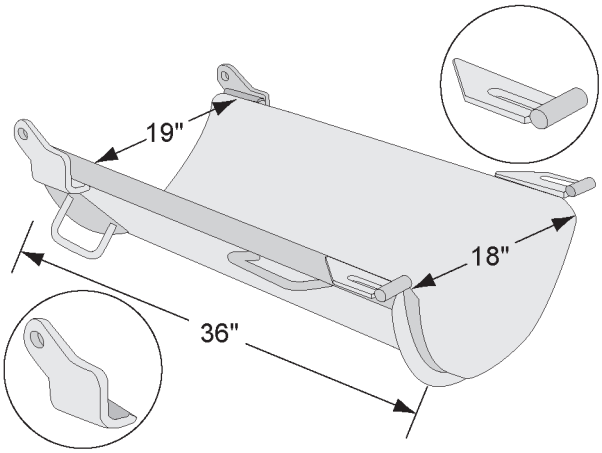

CHUTE - FOLDOVER, FH

0012020 MTM 5042165 CCB

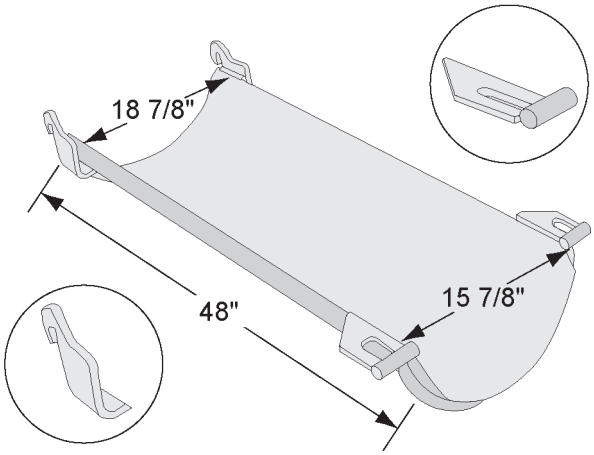

EXT - P, FH

0013010 MTM 5040141 CCB

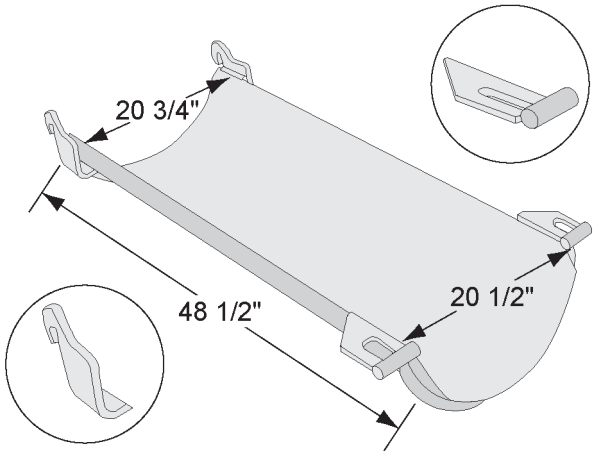

EXT - SP, FH

0013050 MTM 5040810 CCB

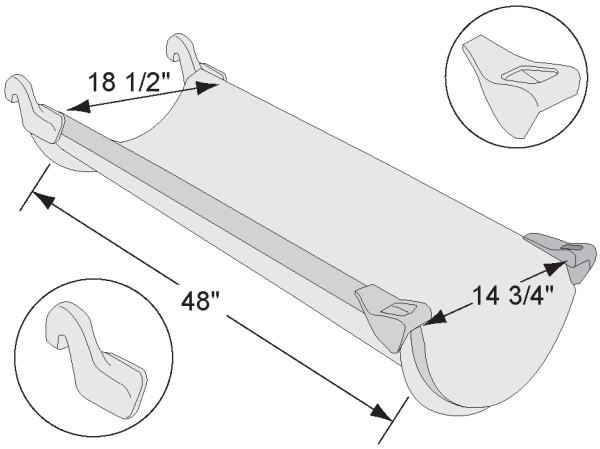

CHUTE - EXTENSION

0012624 MTM 5043748 CCB

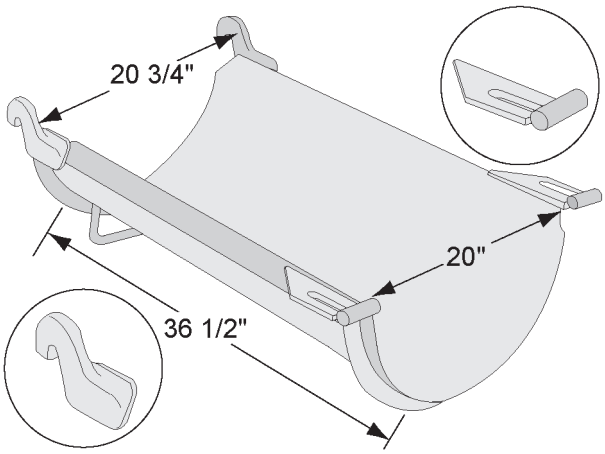

EXT - SP

0014545 MTM 5040809 CCB

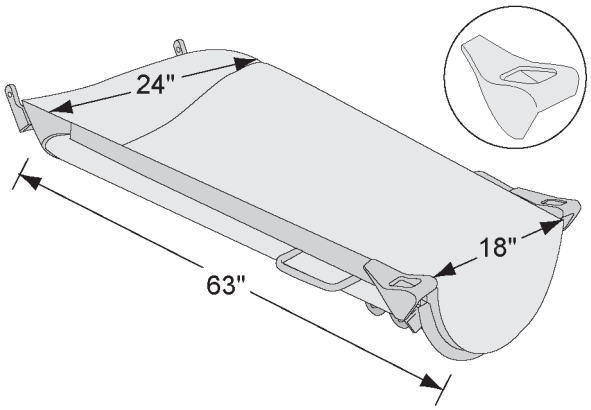

MAIN - SP

0012669 MTM 5043786 CCB

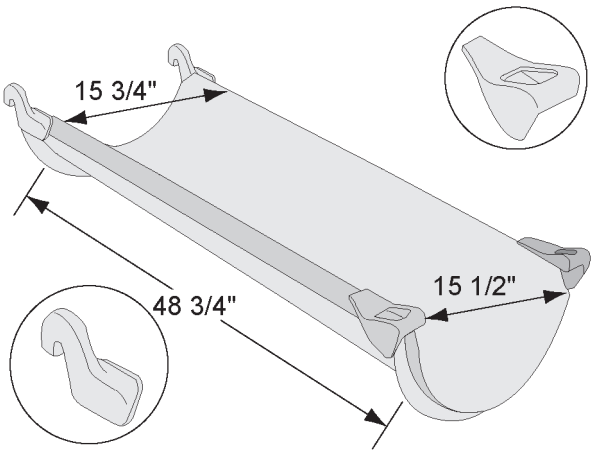

EXT - P, CH

0013070 MTM 5043736 CCB

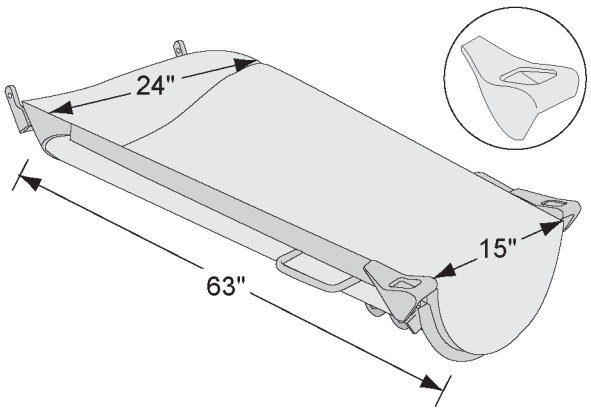

MAIN - PACE

0016669 MTM 5043782 CCB

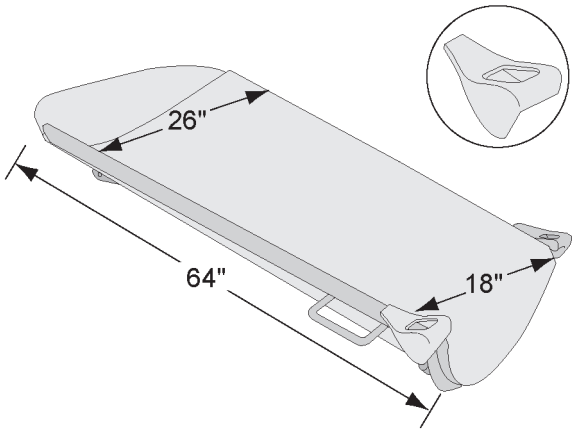

MAIN - KP

0012239 MTM 5044292 CCB

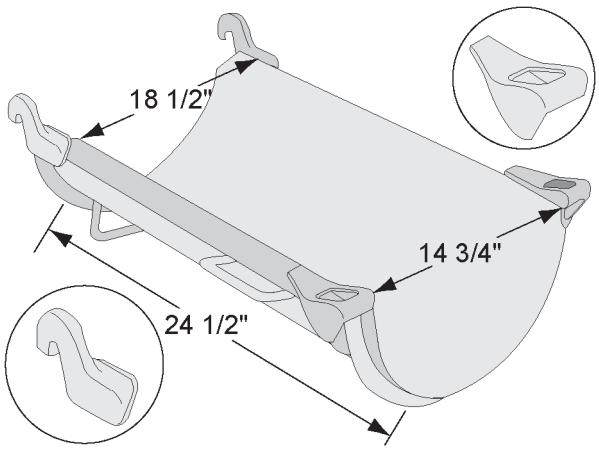

CHUTE - FOLDOVER

0012658 MTM 5043767 CCB

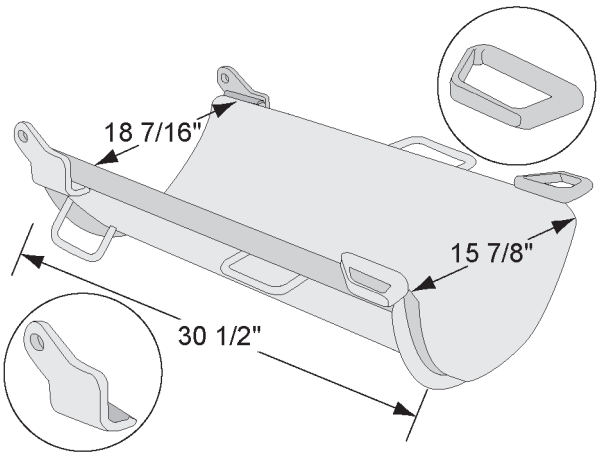

F/O - SP TO MTM

1114094 MTM NPN CCB

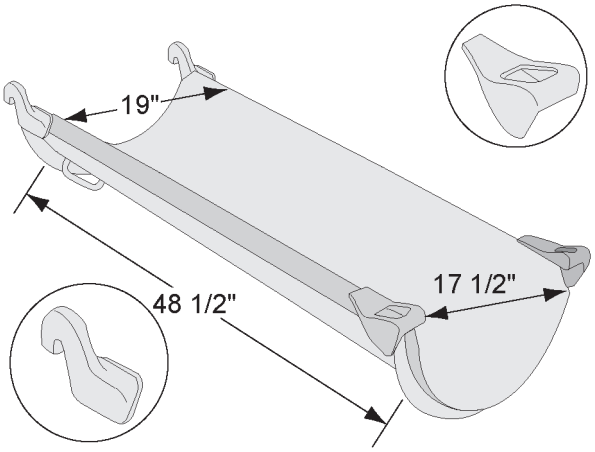

CHUTE - EXTENSION

0016668 MTM 5043740 CCB

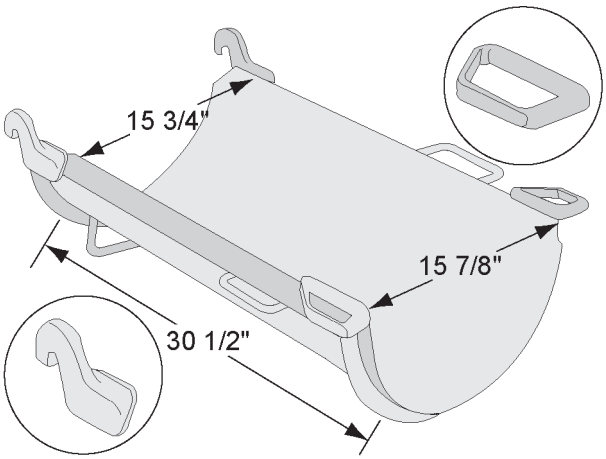

F/0 - PACE TO MTM

1114096 MTM NPN CCB

KIMBLE / K2000

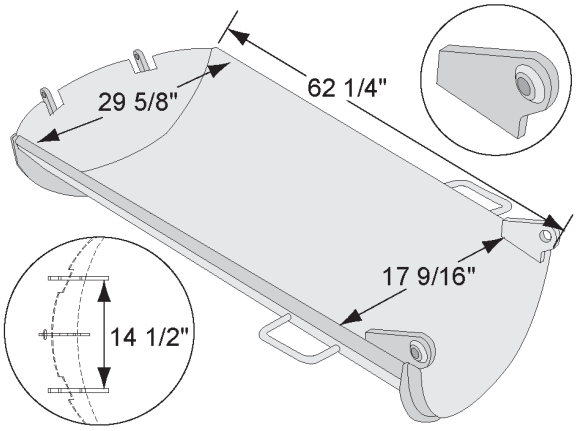

CHUTE - MAIN

1113920 MTM NPN KIMBLE

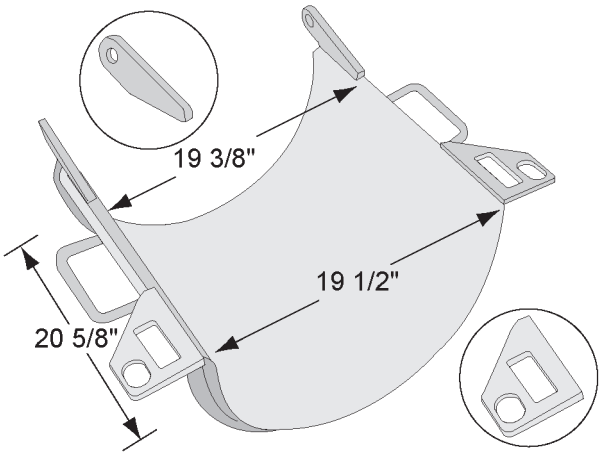

CHUTE - FOLDOVER

1113965 MTM NPN KIMBLE

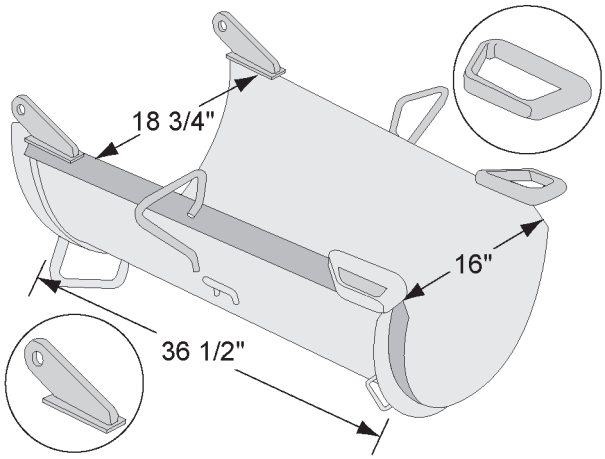

CHUTE - FOLDOVER, STANDARD

1140523 MTM NPN KIMBLE

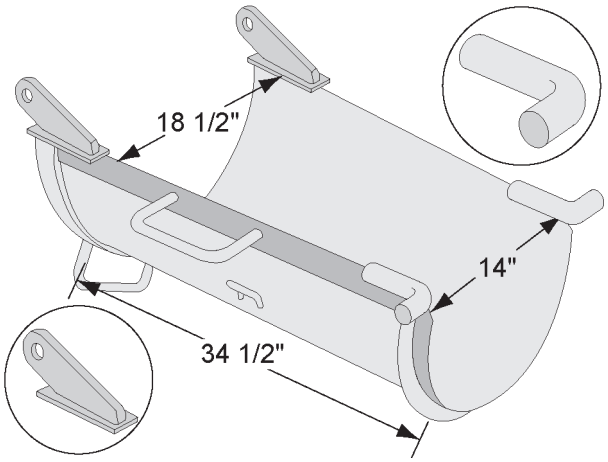

CHUTE - FOLDOVER, TRANSITIONAL

1113979 MTM NPN KIMBLE

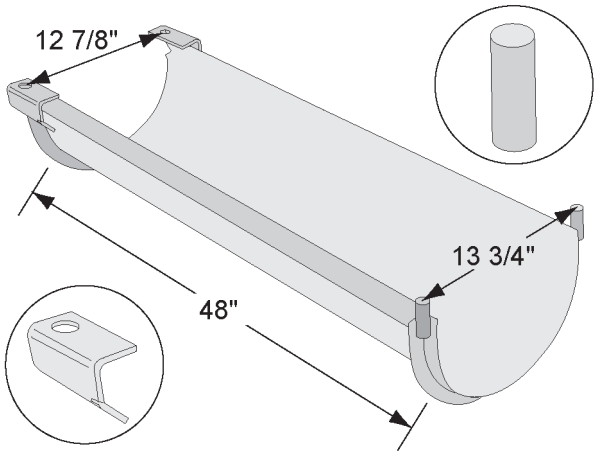

CHUTE - EXTENSION

1110223 MTM NPN KIMBLE

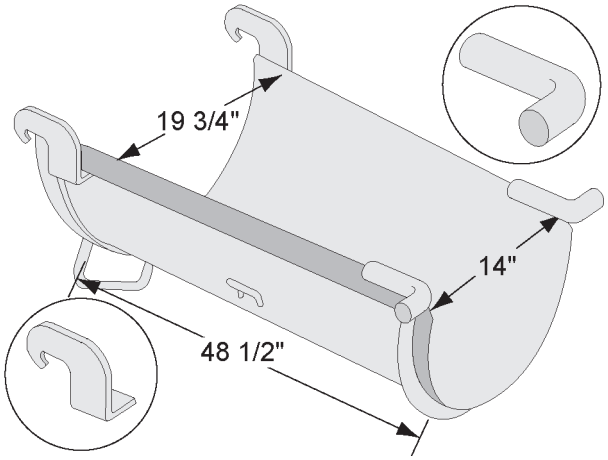

CHUTE - FOLDOVER, TRANSITIONAL

1113977 MTM S01-00Y00-00 KIMBLE

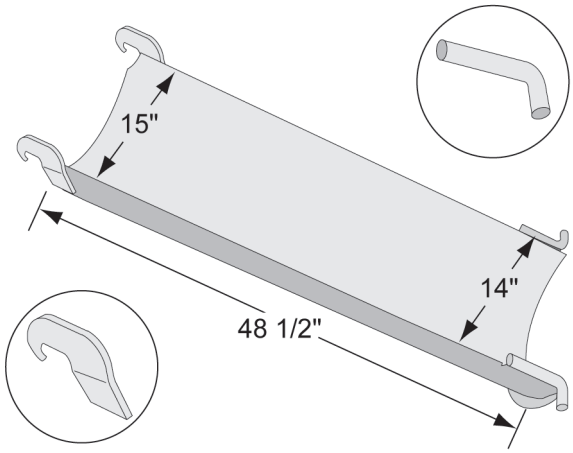

CHUTE - EXTENSION, STANDARD

0043030 MTM S01-00CK0-00 KIMBLE

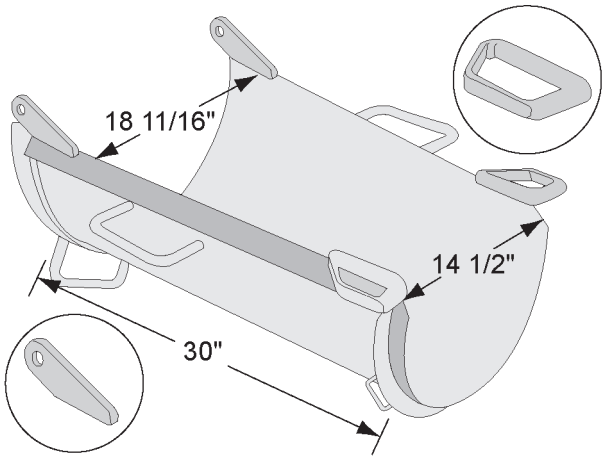

CHUTE - FOLDOVER, TAPER ASSY

1329557 MTM S02-00AA0-00 KIMBLE

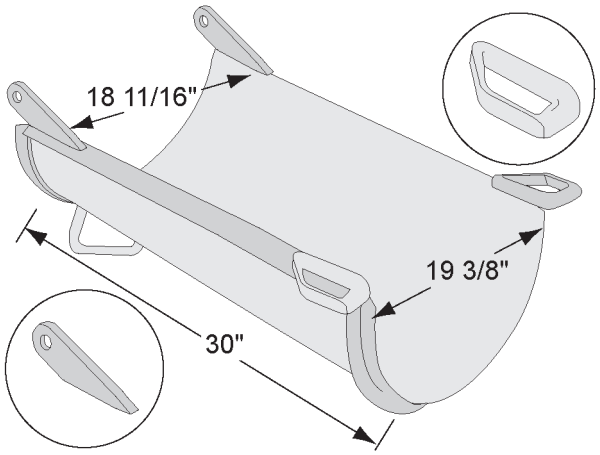

CHUTE - FOLDOVER, PAVER

1330236 MTM S01-00SC0-00 KIMBLE

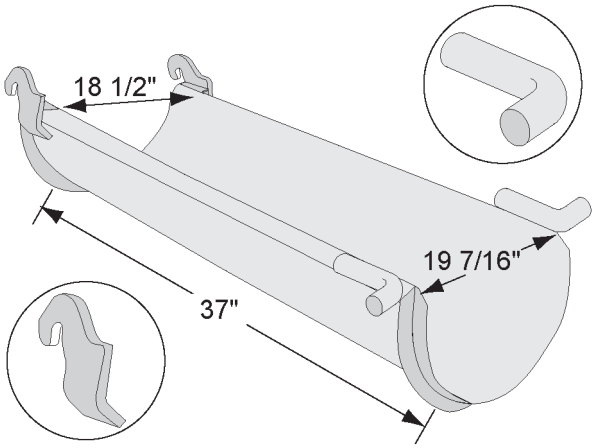

CHUTE - EXTENSION, PAVER

1331045 MTM S01-00AD0-00 KIMBLE

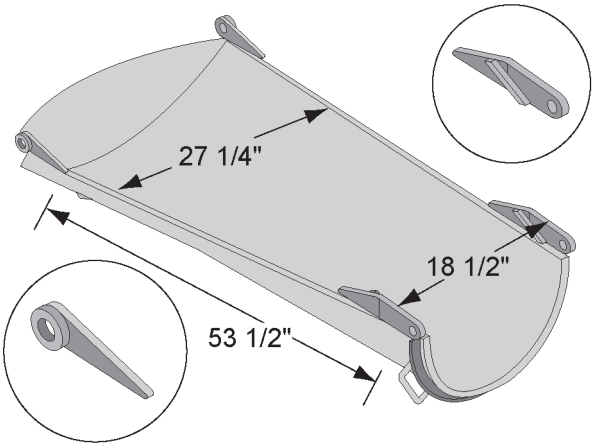

CHUTE - MAIN, SHALLOW

1330849 MTM S01-00AB00-00 KIMBLE

LONDON

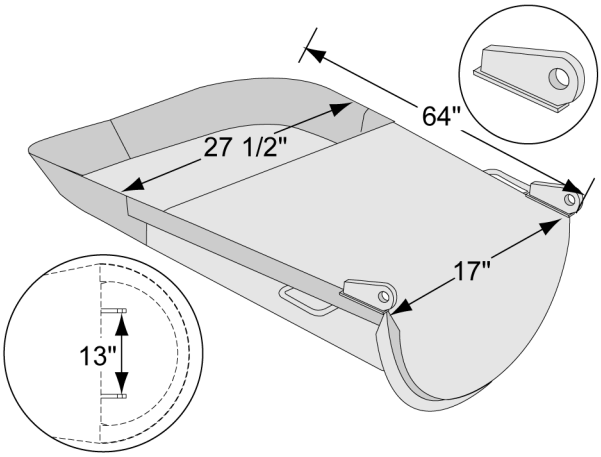

CHUTE - MAIN, LONDON

1111148 MTM MC-38856 LONDON

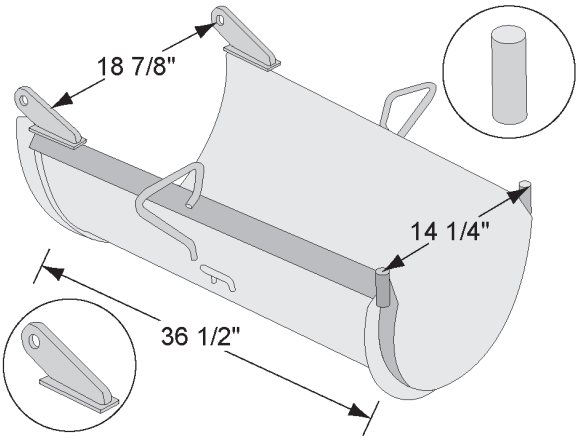

CHUTE - FOLDOVER, STANDARD, LONDON

1110937 MTM MC-24544 LONDON

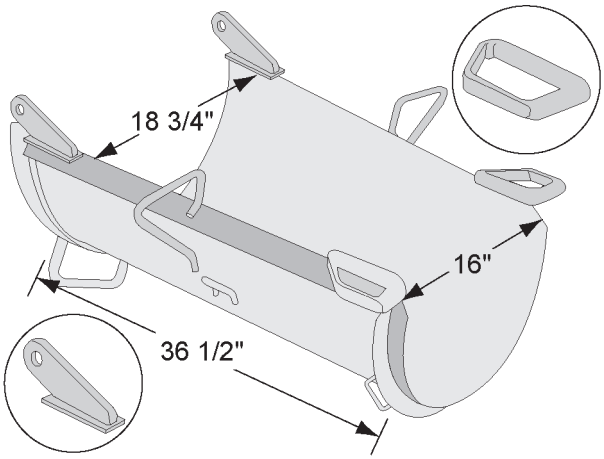

CHUTE - FOLDOVER, STANDARD

1140523 MTM MC-37822 LONDON

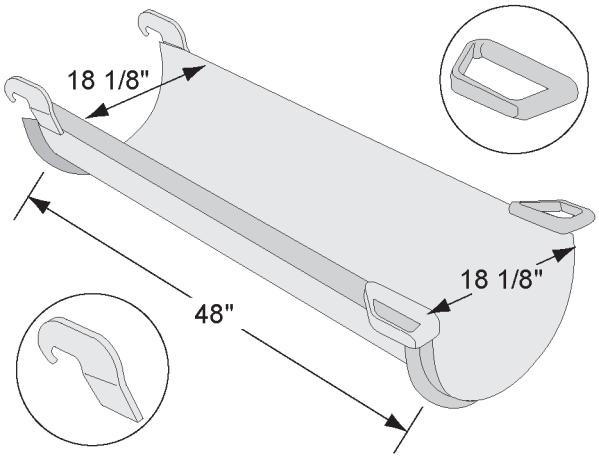

CHUTE - EXTENSION, ALUMINUM

1111033 MTM MC-38686 LONDON

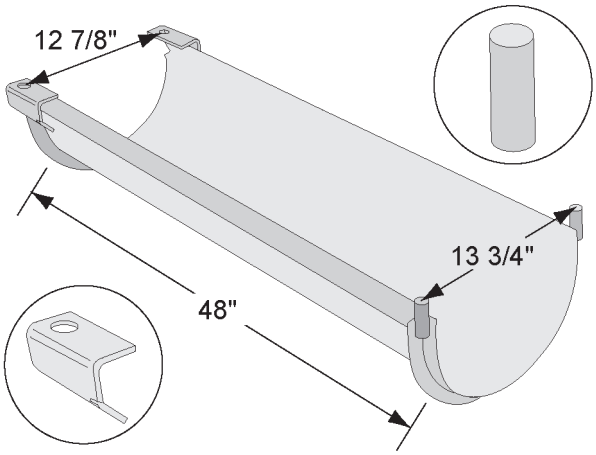

CHUTE - EXTENSION

1110223 MTM MC-22473 LONDON

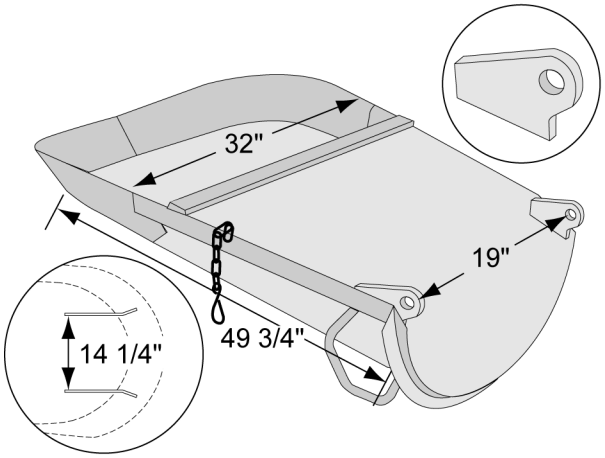

MAIN CHUTE - SUPER PAVER

1255838 MTM MC-38839 LONDON

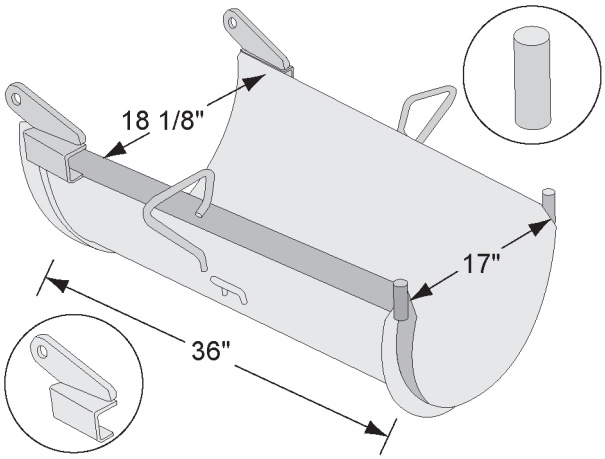

CHUTE - FOLDOVER

1113230 MTM MC-29102 LONDON

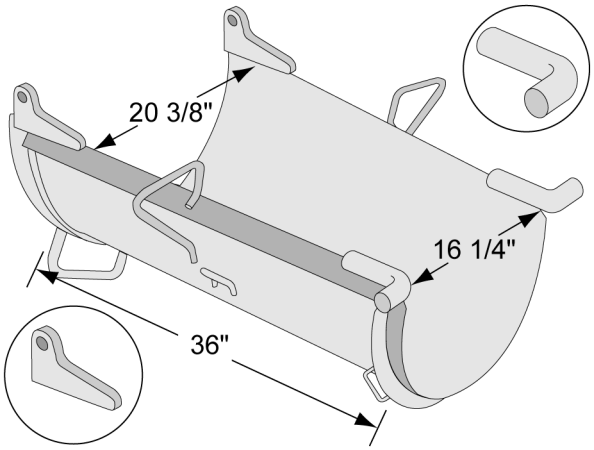

TRANS.FOLD S. PAVER-MTM STD

1255783 MTM MC-33559 LONDON

MTM

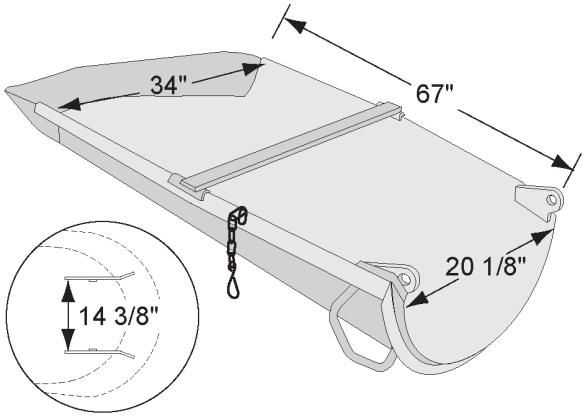

CHUTE - MAIN, TUCK-A-WEIGH, '93

0151560 MTM

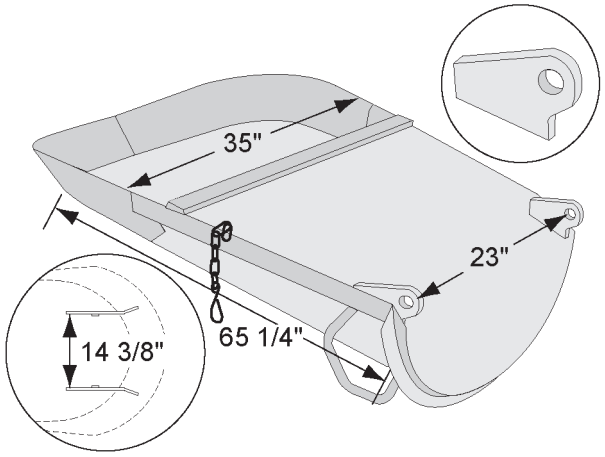

CHUTE - MAIN, WITH LINER

0152645 MTM

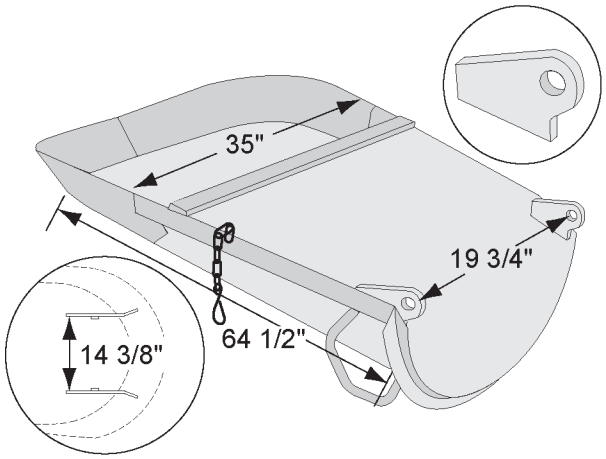

CHUTE - MAIN

0152625 MTM

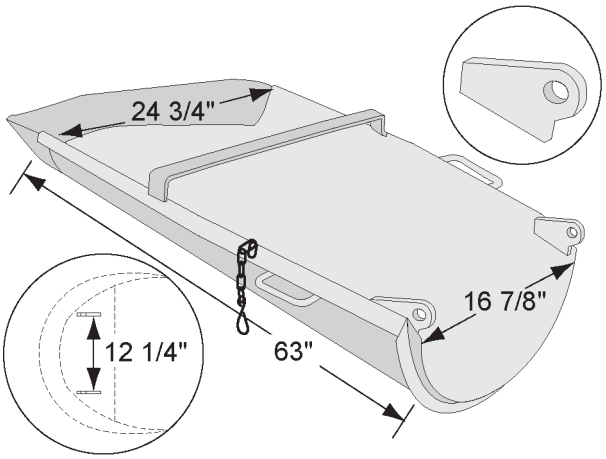

CHUTE - MAIN, '78-'84

0082280 MTM

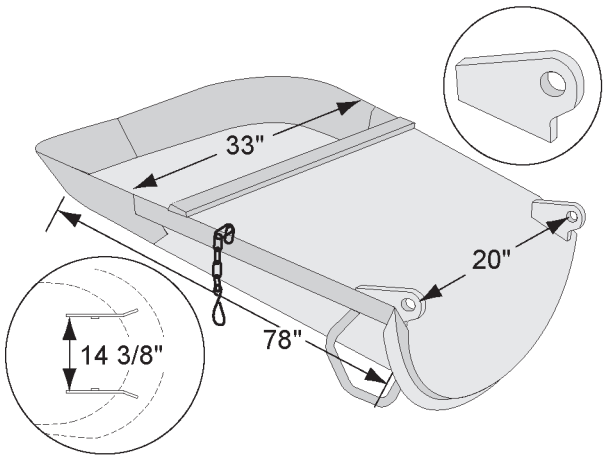

CHUTE - MAIN, '93-'96

0153585 MTM

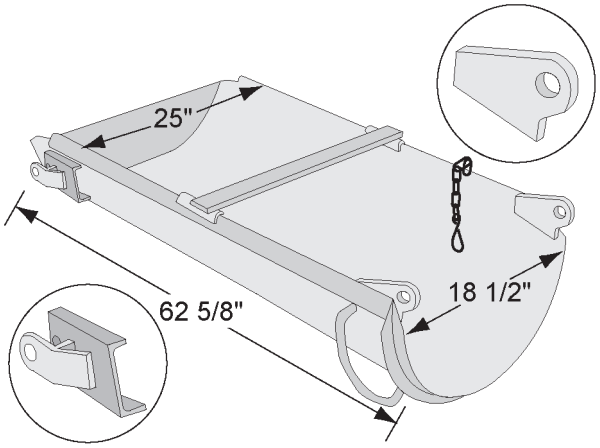

CHUTE - MAIN, BMII

0182550 MTM

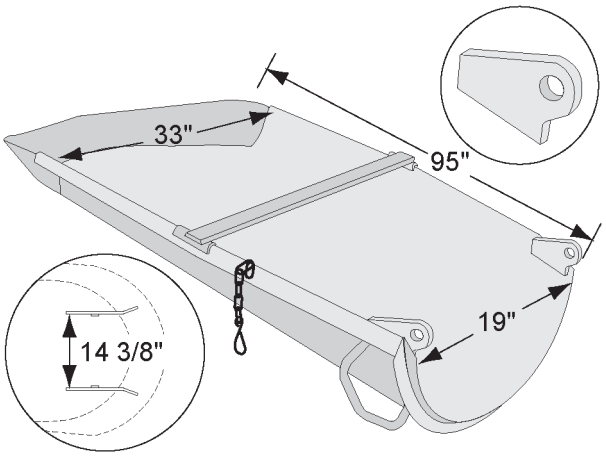

CHUTE - MAIN, 7’4”

1253078 MTM

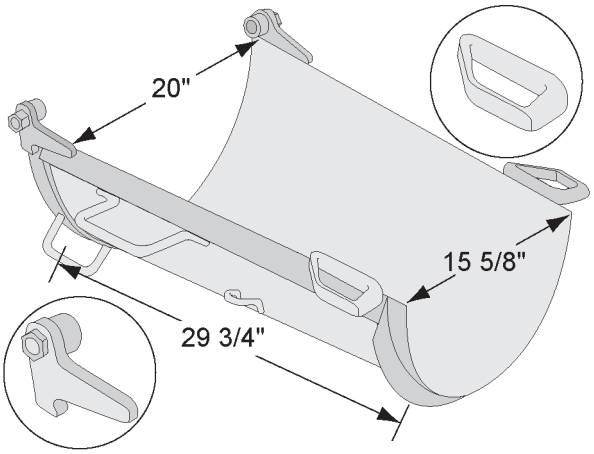

CHUTE - FOLDOVER

0152630 MTM

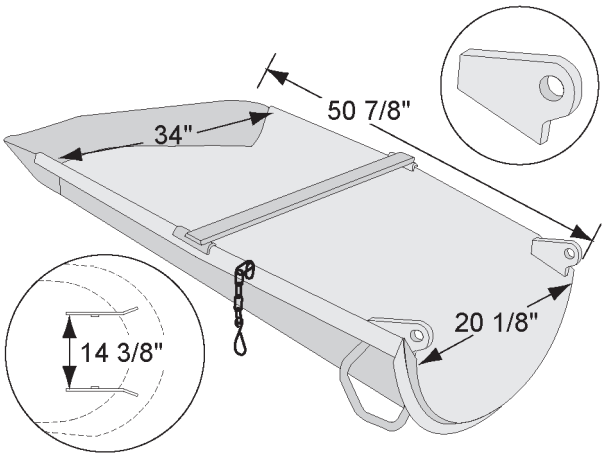

CHUTE - MAIN, ‘84-’87

0150550 MTM

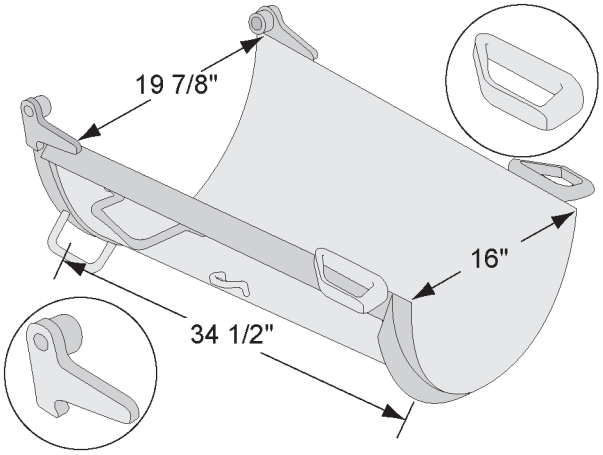

CHUTE - FOLDOVER

0151600 MTM

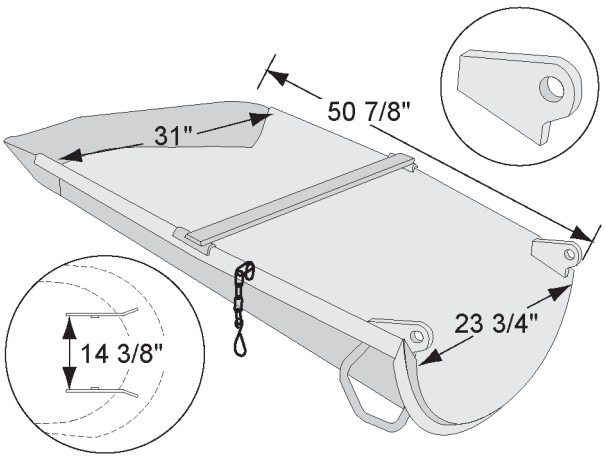

CHUTE - MAIN

0160550 MTM

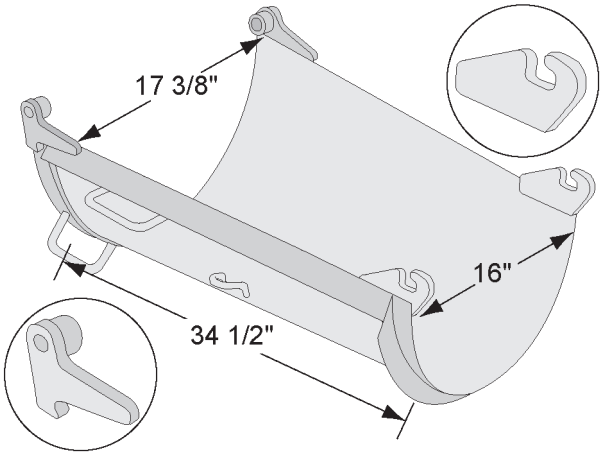

CHUTE - FOLDOVER

0082290 MTM

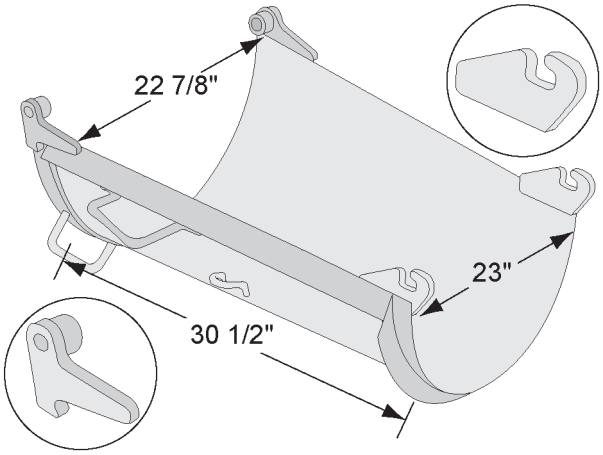

CHUTE - FOLDOVER

0160600 MTM

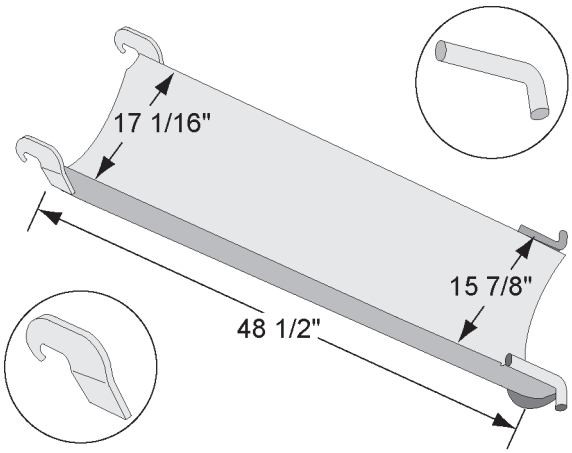

CHUTE - EXTENSION, TYPE 4

0151650 MTM

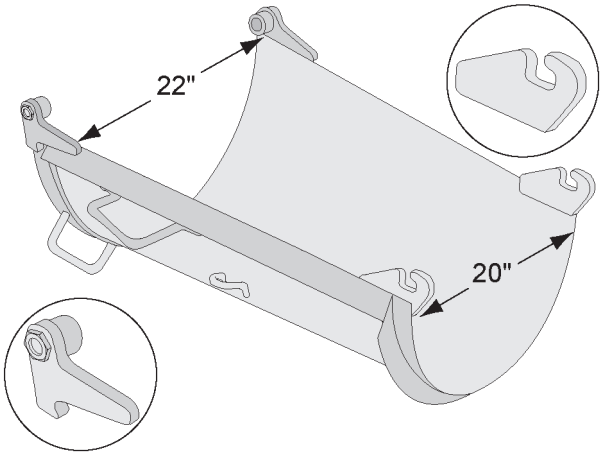

CHUTE - FOLDOVER

0082320 MTM

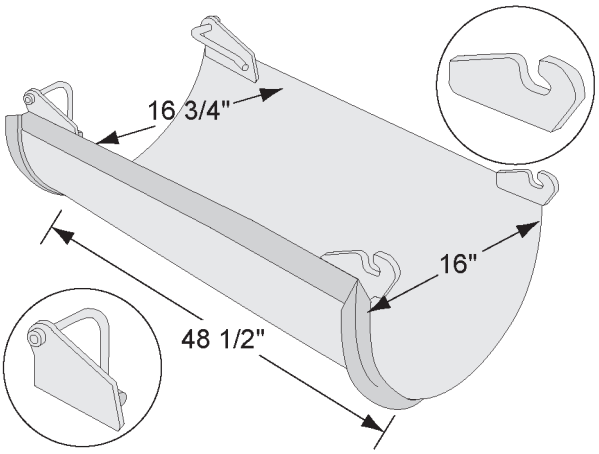

CHUTE - EXTENSION, TYPE III

0082300 MTM

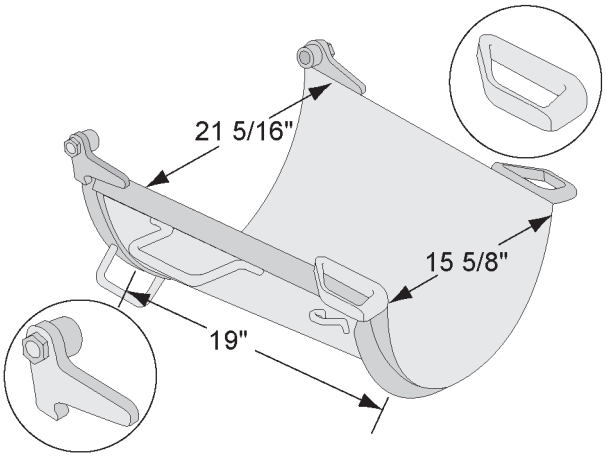

CHUTE - FOLDOVER

1225256 MTM

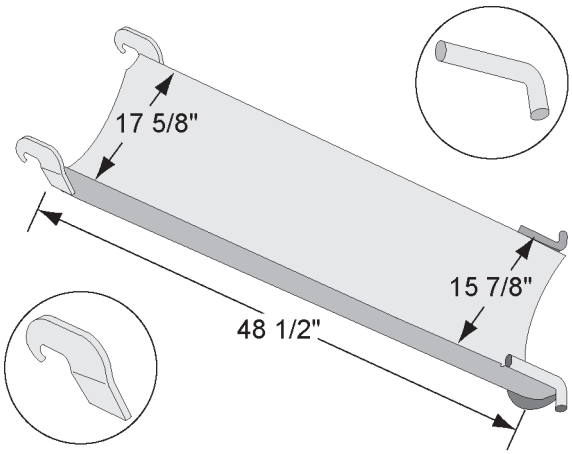

CHUTE - EXTENSION, LWT

0151665 MTM

REX

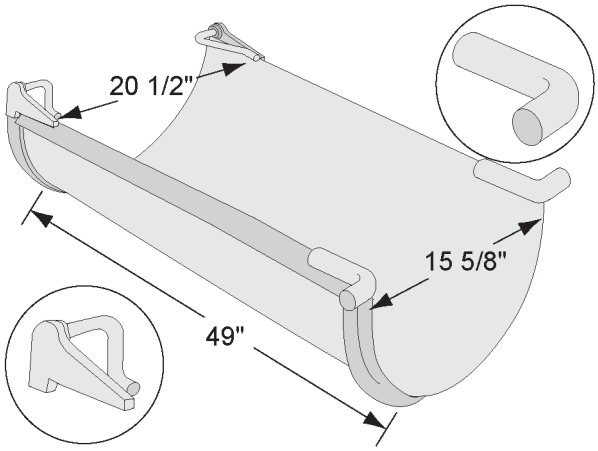

CHUTE - EXTENSION, TRANS PVR

0151660 MTM

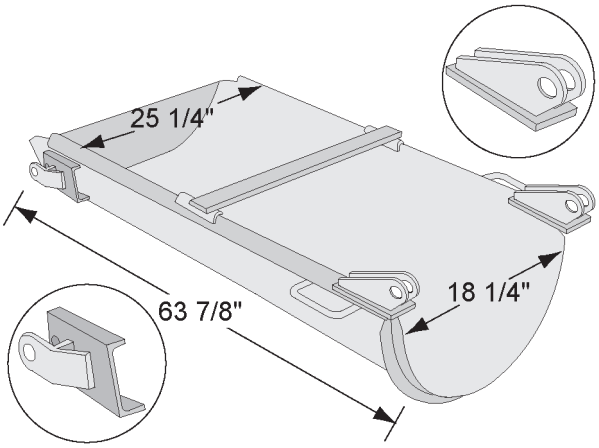

CHUTE - MAIN, 770

1110318 MTM 502-06827-81 REX

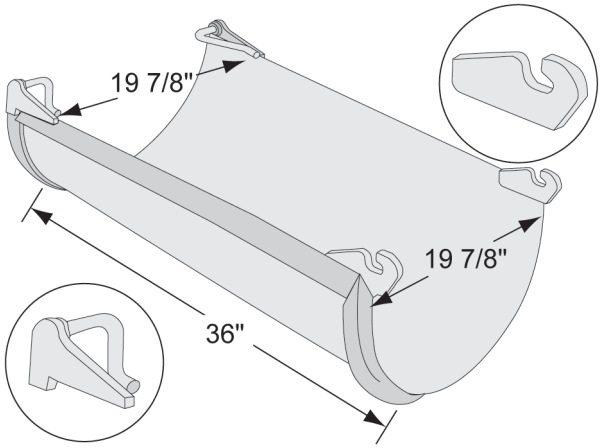

CHUTE - EXTENSION, PVR

0082315 MTM

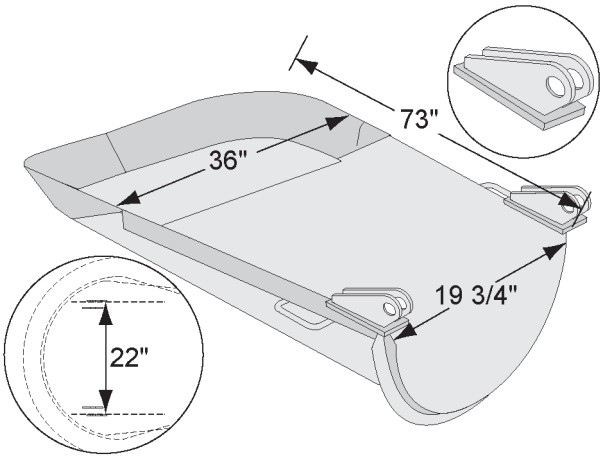

CHUTE - MAIN, MKIII

1113073 MTM 502-09531-80 REX

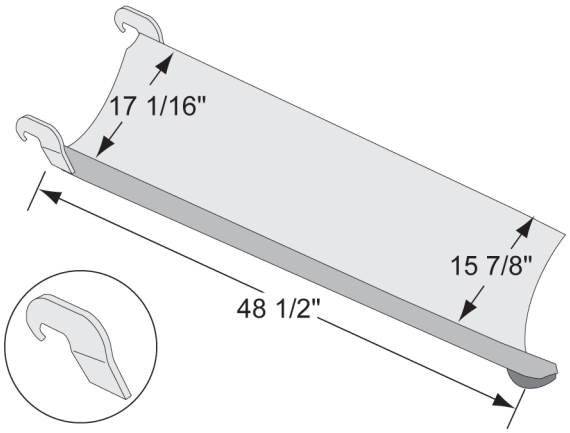

CHUTE - END

0151690 MTM

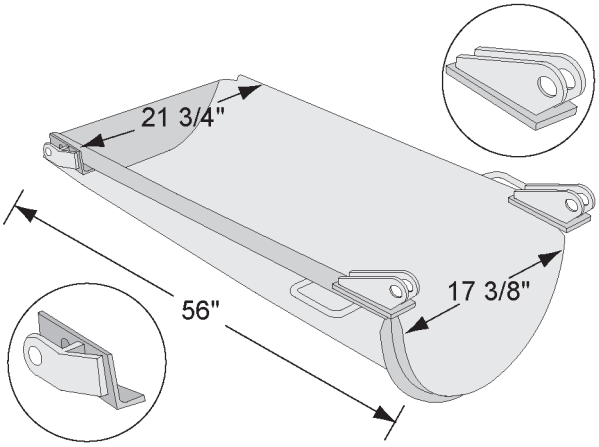

CHUTE - MAIN, RLX

0041090 MTM 502-06939-83 REX

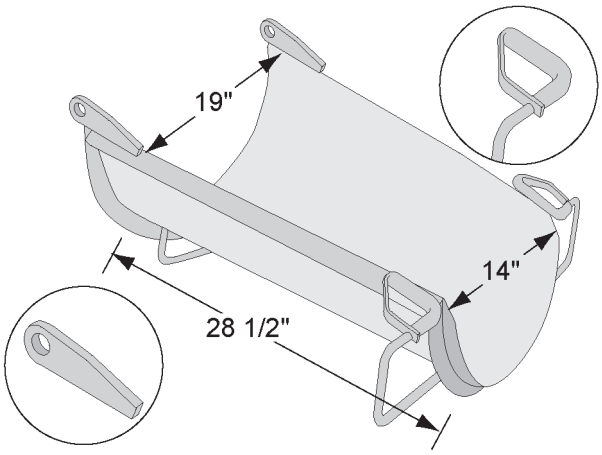

CHUTE - FOLDOVER

0042025 MTM 502-06657-80 REX

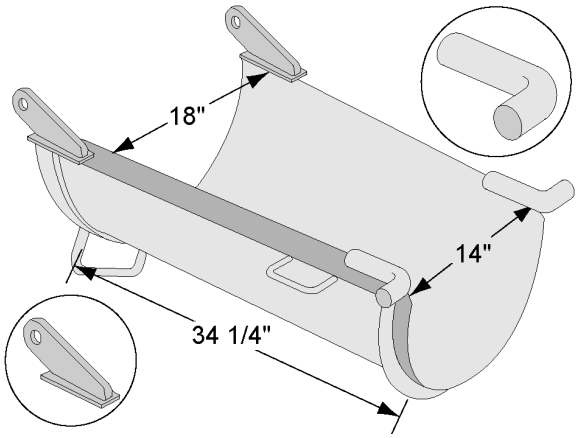

CHUTE - FOLDOVER, REX 770

0042040 MTM

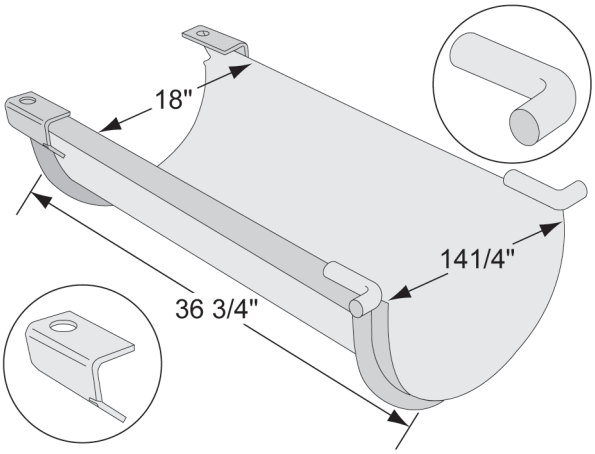

CHUTE - EXTENSION, TRANS

1114072 MTM 502-20300-80 REX

SCHWING

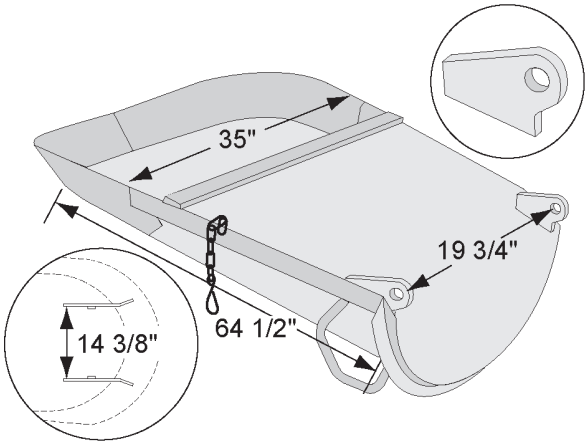

CHUTE - MAIN, 7/8" HARDWARE ASSY

1486307 MTM 60306054 SCHWING

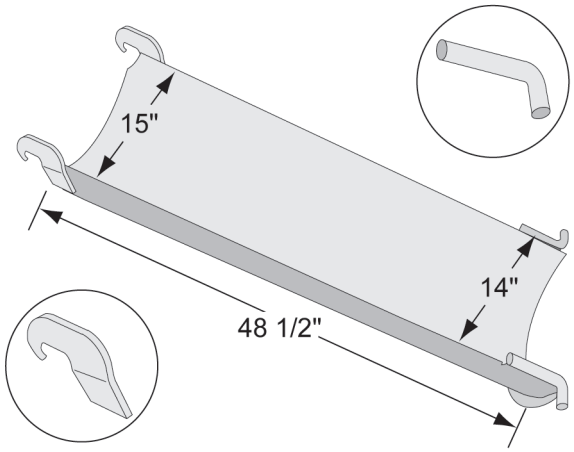

CHUTE - EXTENSION, 770

0043030 MTM 502-20138-80 REX

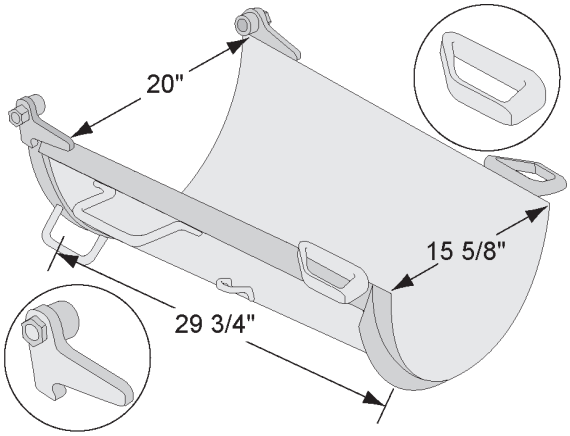

CHUTE - FOLDOVER, STD

0152630 MTM 60306171 SCHWING

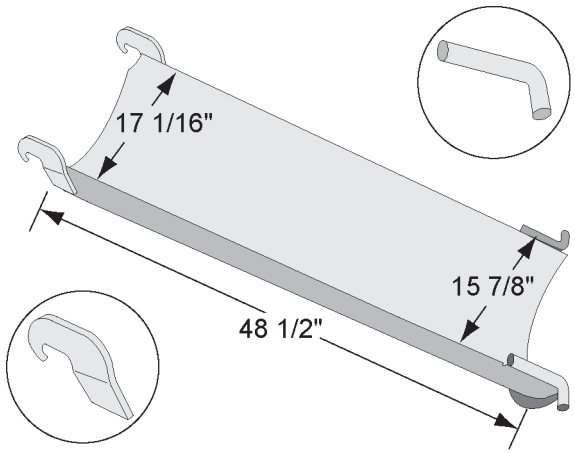

CHUTE - EXTENSION, STD

0151650 MTM 60306114 SCHWING

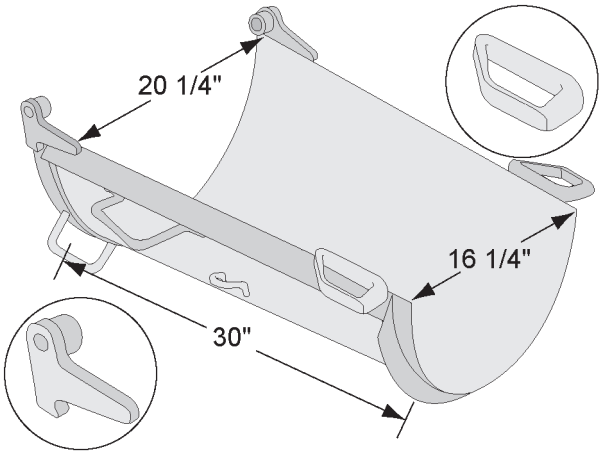

CHUTE - FOLDOVER

1110258 MTM 4381700 SMITH

SMITH

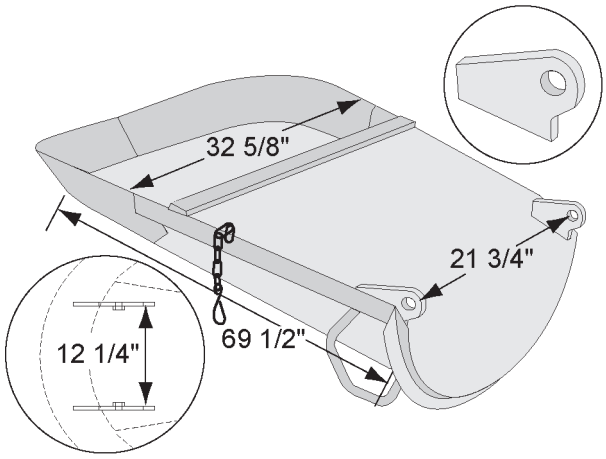

MAIN - CHUTE, O/S

1110317 MTM 2550000 SMITH

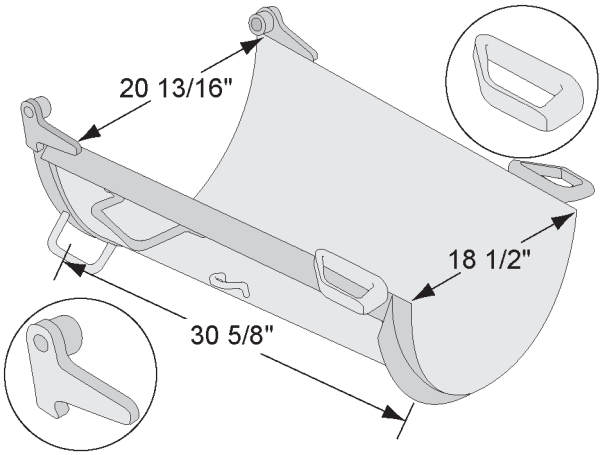

CHUTE - FOLDOVER, PVR

1110259 MTM 4381700P SMITH

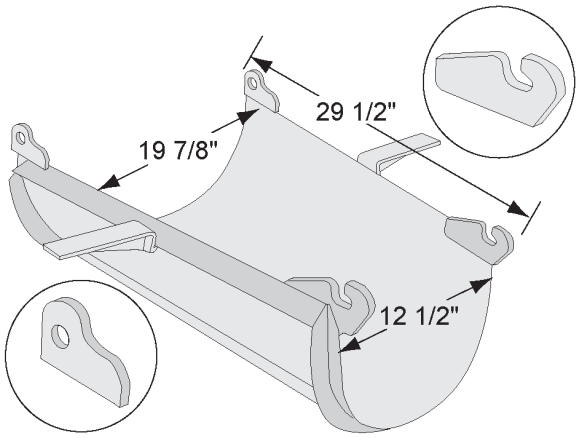

CHUTE - FOLDOVER

1110255 MTM 2551000 SMITH

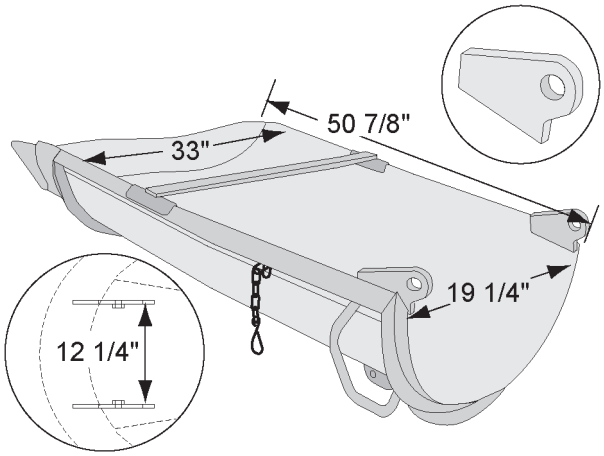

CHUTE - MAIN

1110332 MTM 43816000 SMITH

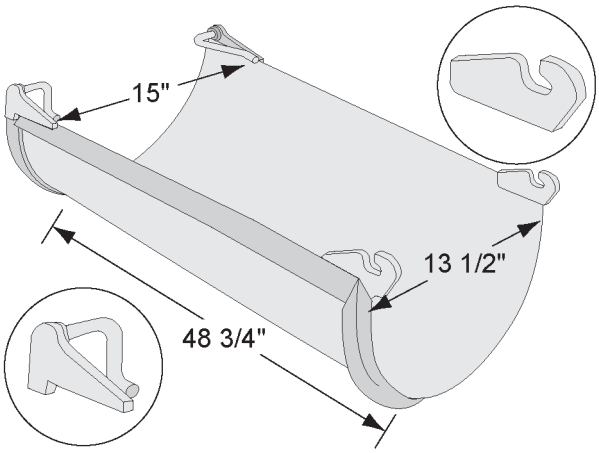

CHUTE - EXTENSION

1110222 MTM YM-1024-000 SMITH

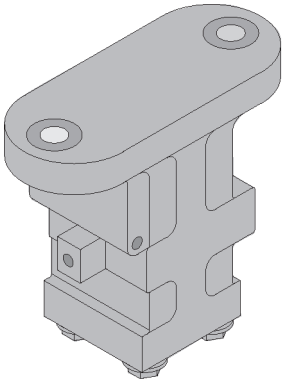

VIBRATOR - CHUTE, HOUSTON

1228002 MTM

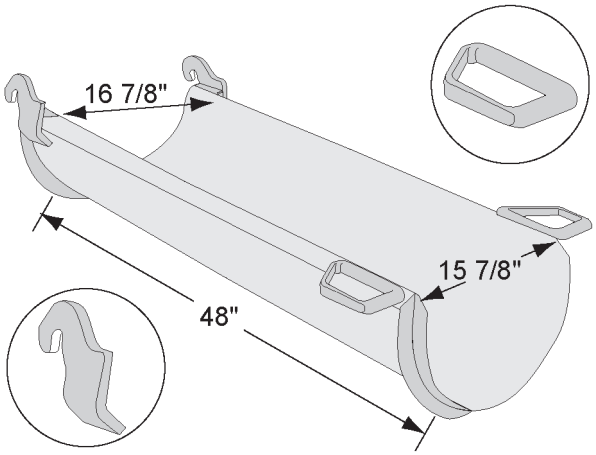

CHUTE - EXTENSION

1110242 MTM 43897001 SMITH

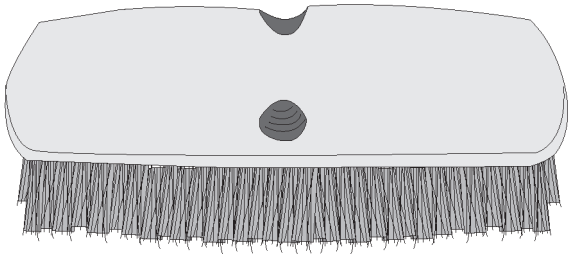

BRUSH - WASHDOWN (ONLY)

0002063 MTM

CHUTE ACCESSORIES

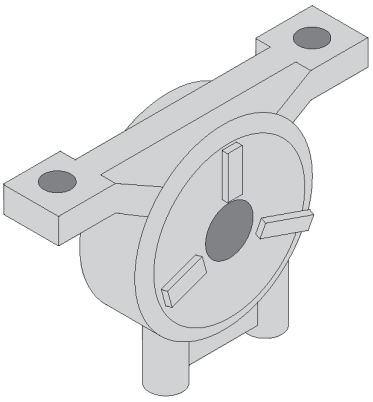

VIBRATOR - PNU, ROTARY

1235987 MTM

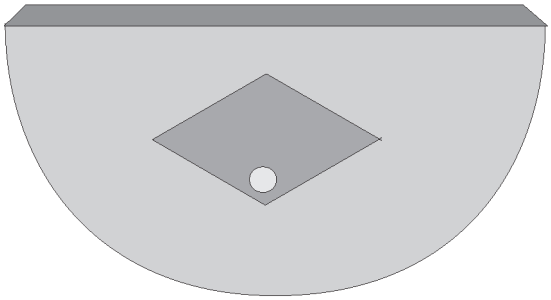

SCRAPER - CHUTE (ONLY)

0002060 MTM

HANDLE - BRUSH/SCRAPER (ONLY)

0002064 MTM

HANDLE - FIBER, 5 FT., BRUSH/SCRAPER

1234334 MTM

HANDLE - WOOD, 5 FT., BRUSH/SCRAPER

1234335 MTM

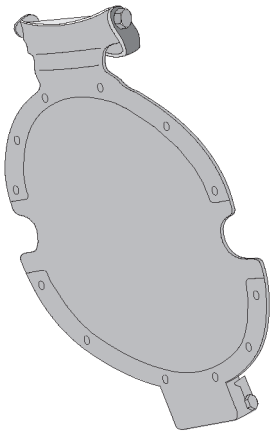

GUARD - ROCK, MAIN CHUTE

1519071 MTM

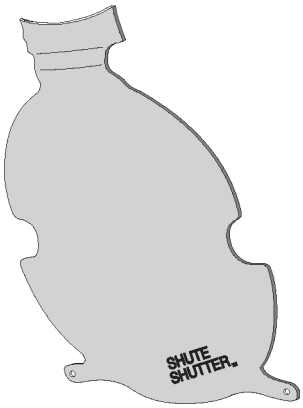

KIT - SHUTE SHUTTER, W/O AUTOLOCK

1102919 MTM

KIT - SHUTE SHUTTER, W/AUTOLOCK

1102920 MTM

KIT - SHUTE SHUTTER

1182512 MTM

THIS PAGE INTENTIONALLY LEFT BLANK

THIS PAGE INTENTIONALLY LEFT BLANK

Hoppers

ADVANCE / TEREX

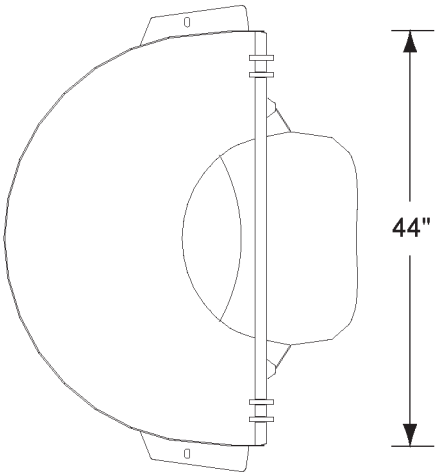

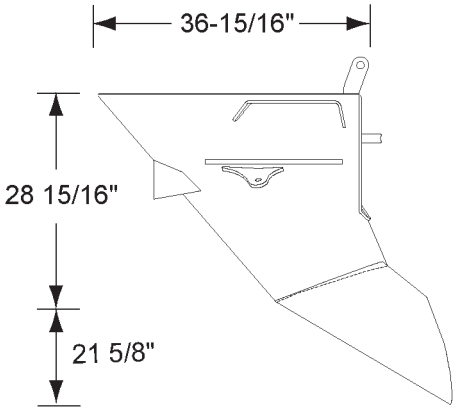

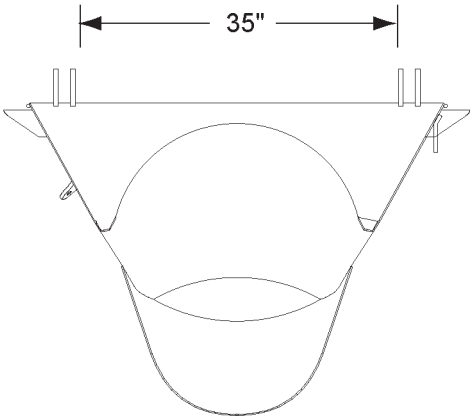

HOPPER - PAVER, LOW MOUNT

1324337 MTM 41444 TEREX

BECK

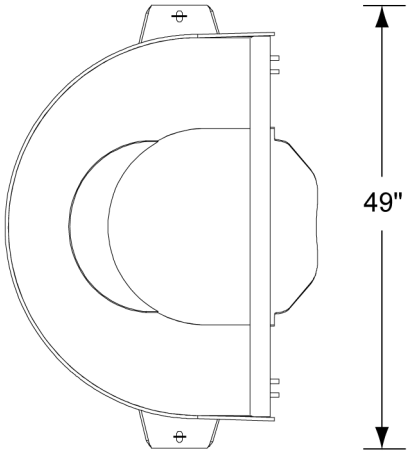

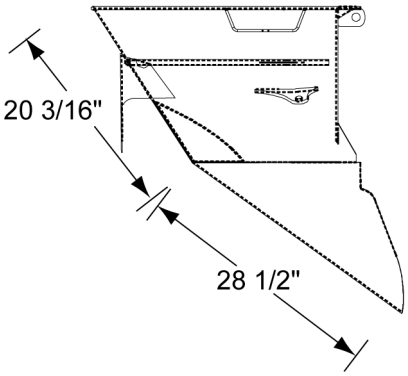

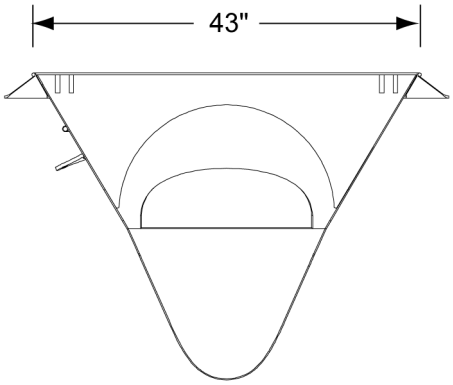

HOPPER - CHARGE, STD

1358273 MTM 43000 BECK

CBMW

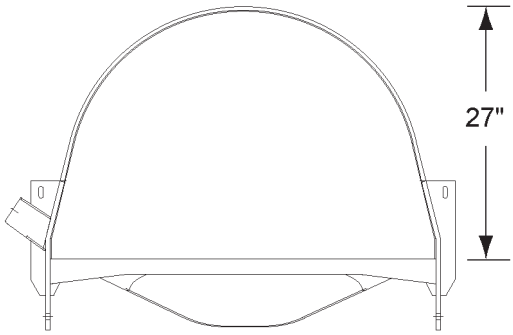

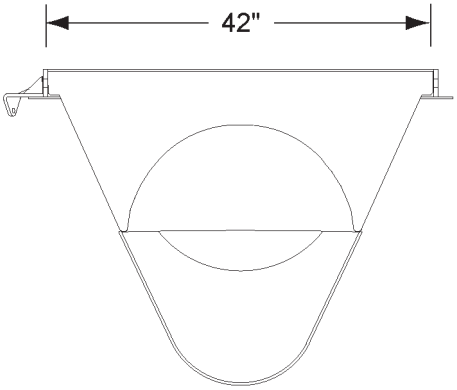

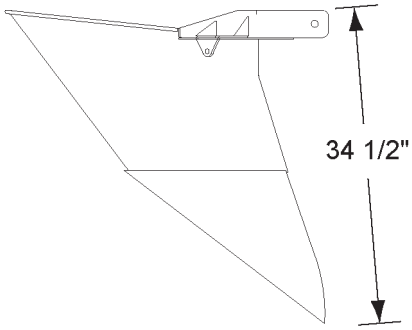

HOPPER - CHARGE

0250100 MTM 90540900 CBMW

CCB

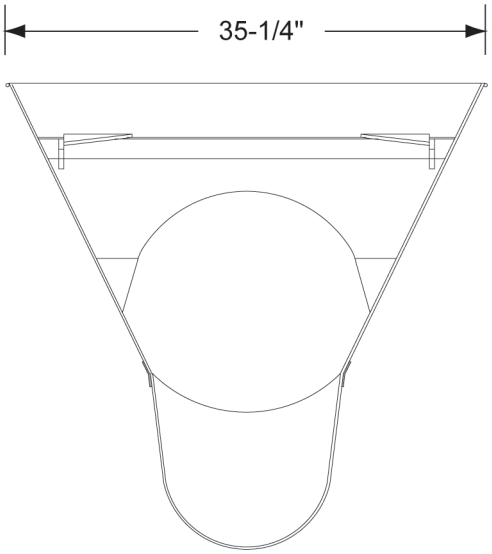

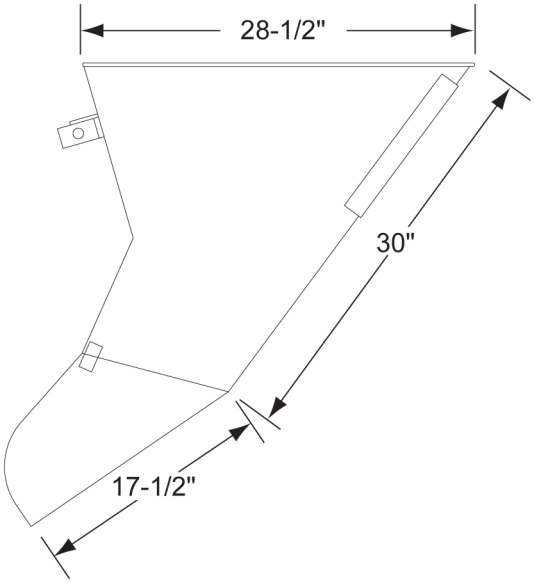

CCCB - PACEMAKER

0014142 MTM 5040792 CCB

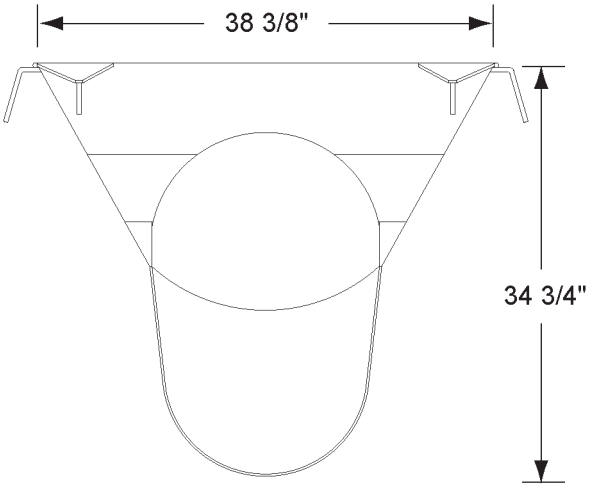

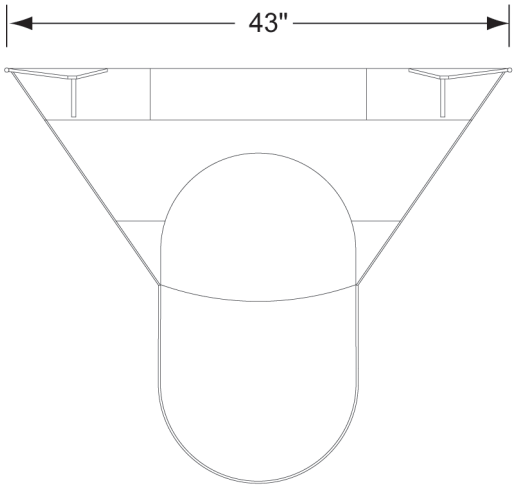

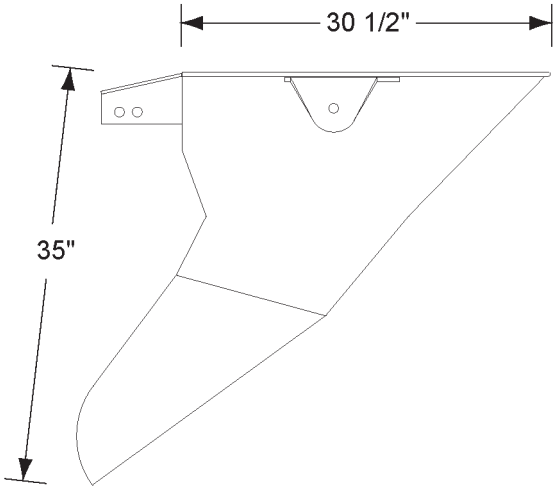

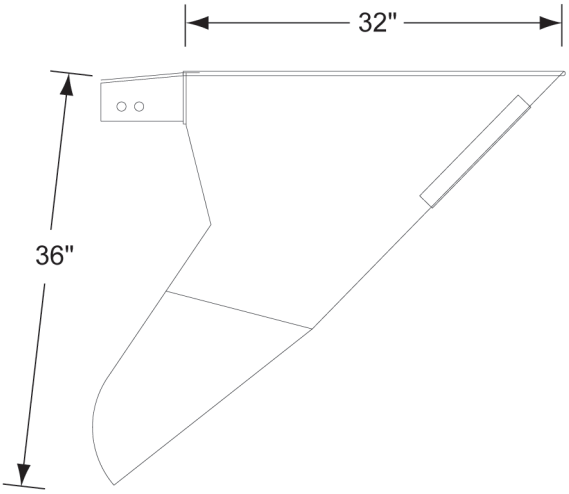

CCB - FIXED

0014000 MTM 5041331 CCB

HOPPER ASSEMBLY

0014546 MTM 5041983 CCB

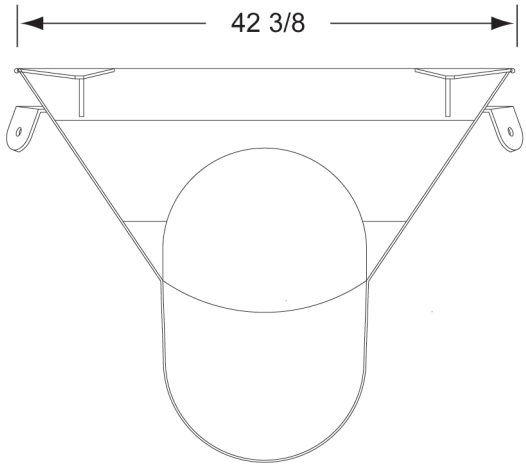

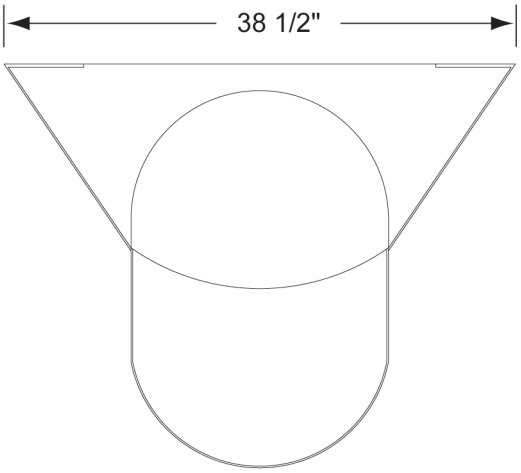

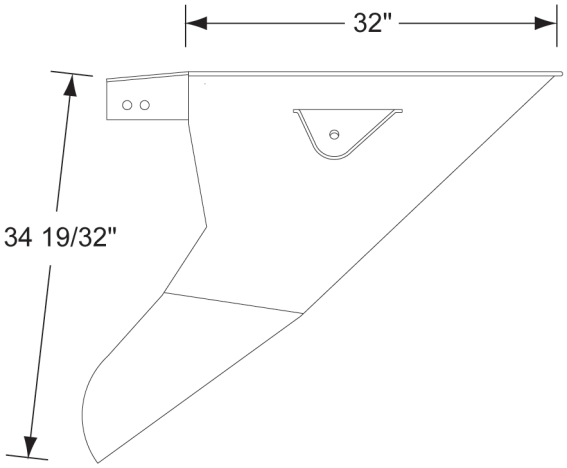

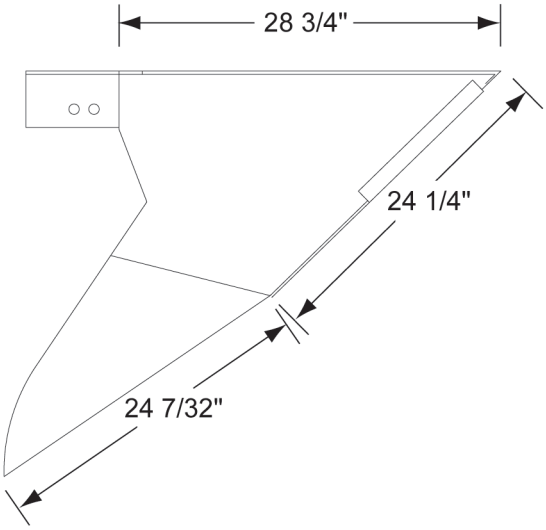

CCB - WBL

0012764 MTM 5042881 CCB

CCB - LOADSTAR

0012181 MTM 5044040 CCB

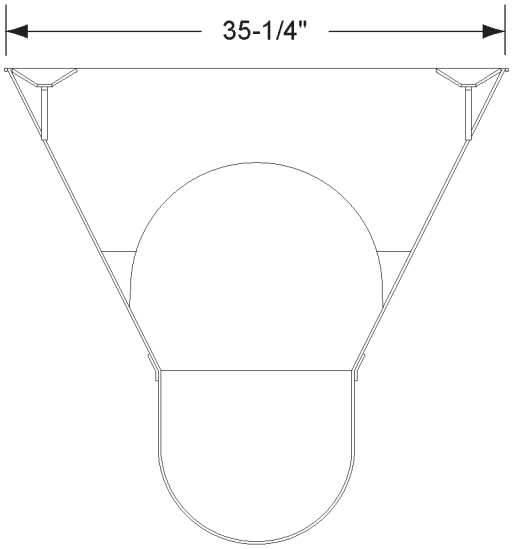

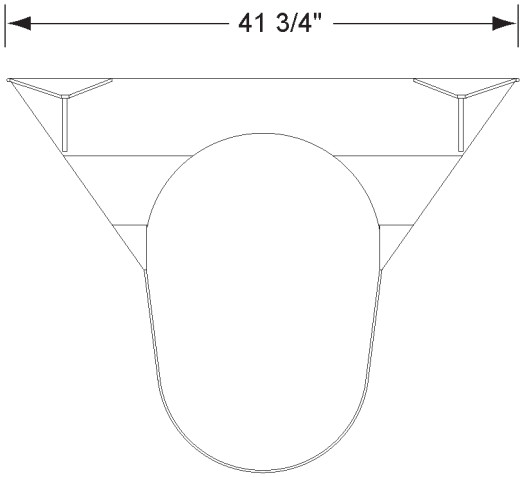

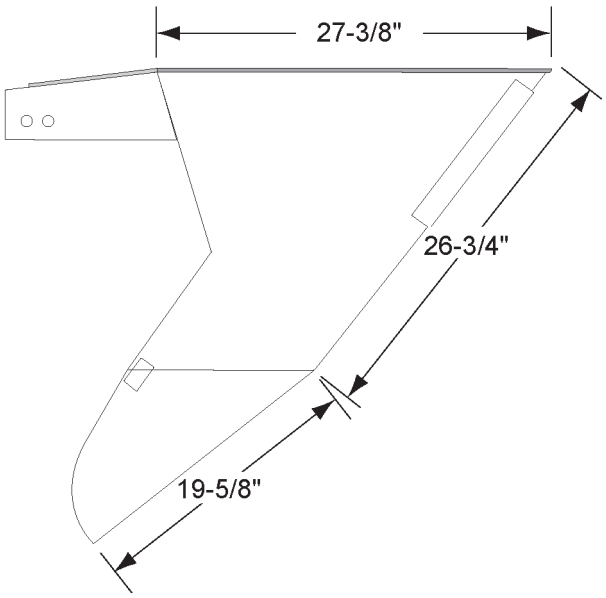

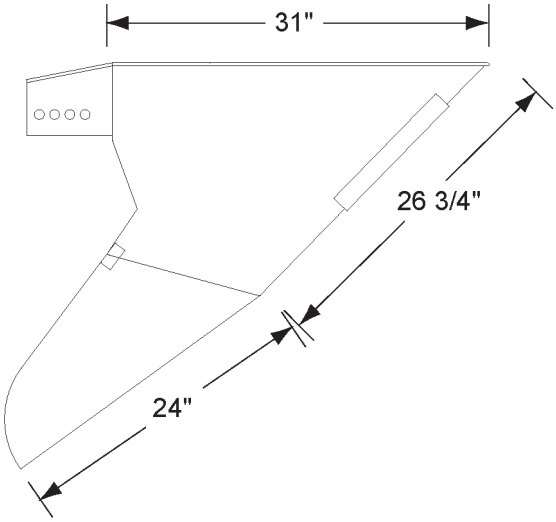

HOPPER - FIXED

0014140 MTM 5041861 CCB

HOPPER ASSEMBLY

0012179 MTM 5044192 CCB

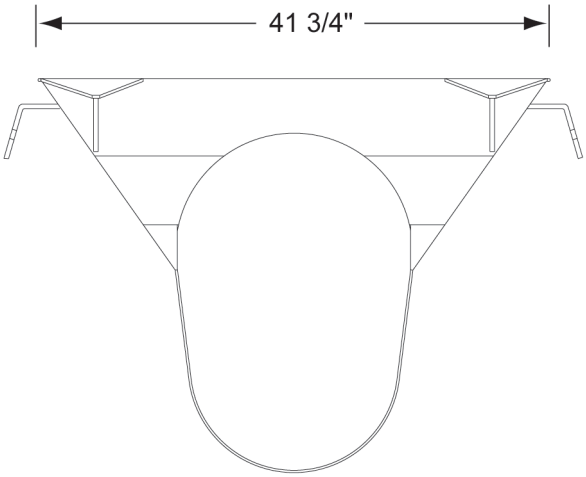

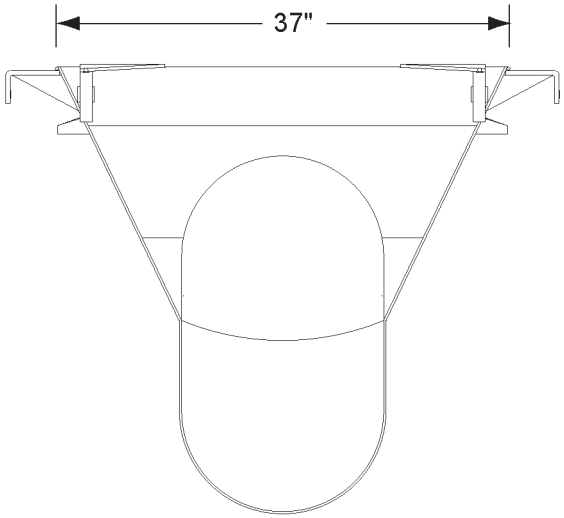

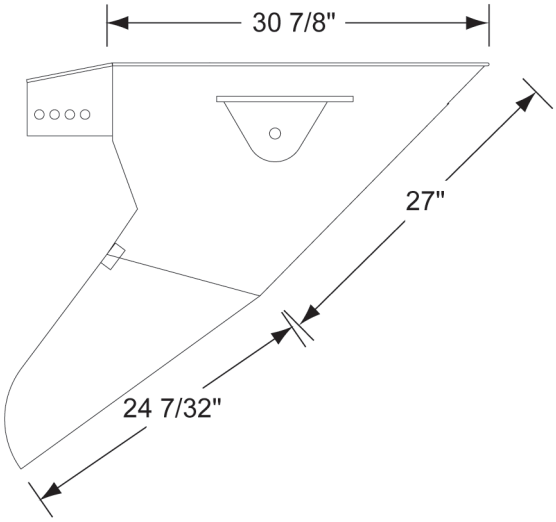

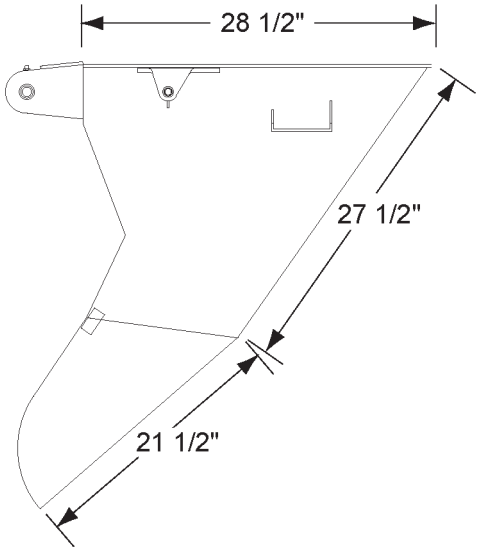

HOPPER ASSEMBLY

0014141 MTM 5044197 CCB

CCB - F6, AIR

0014143 MTM 5041918 CCB

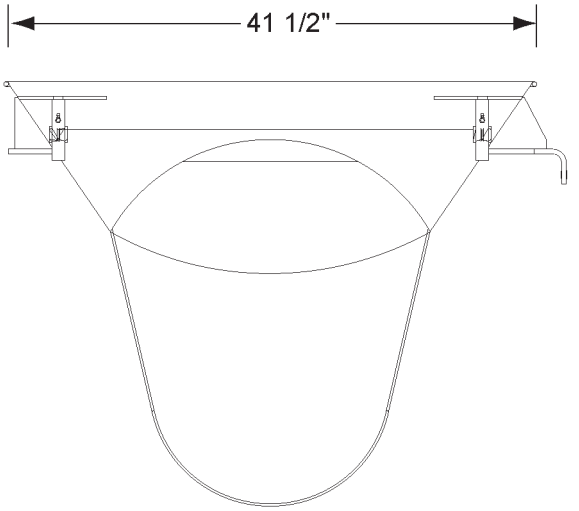

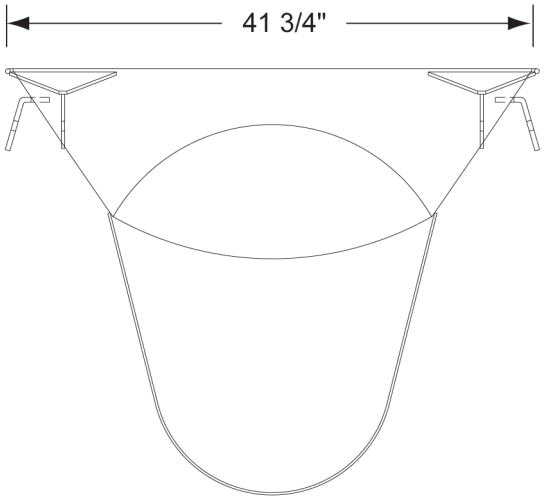

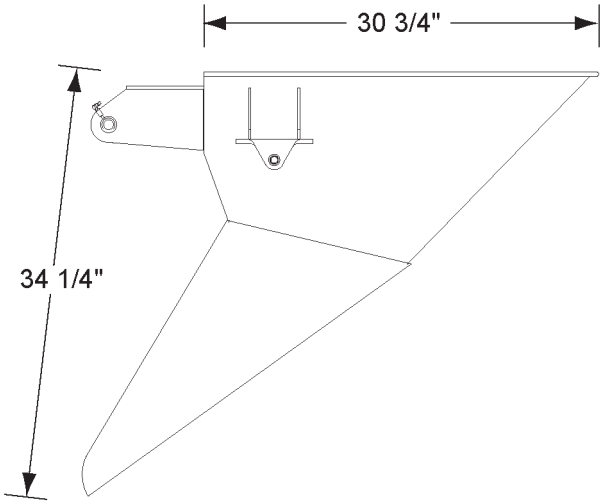

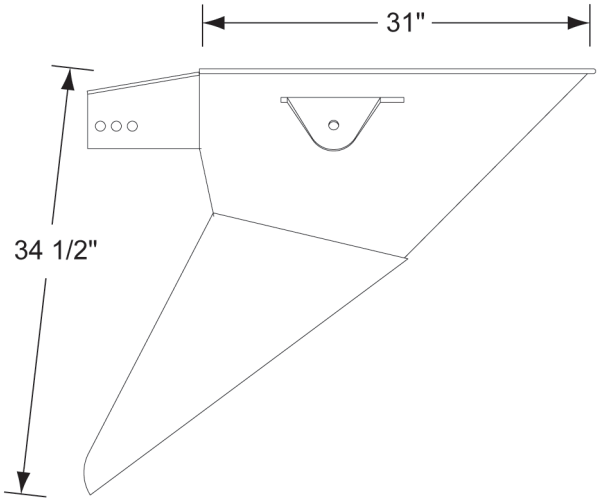

CCB - F6, AIR

0011136 MTM 5044378 CCB

CCB - F6, STD

0012757 MTM 5044372 CCB

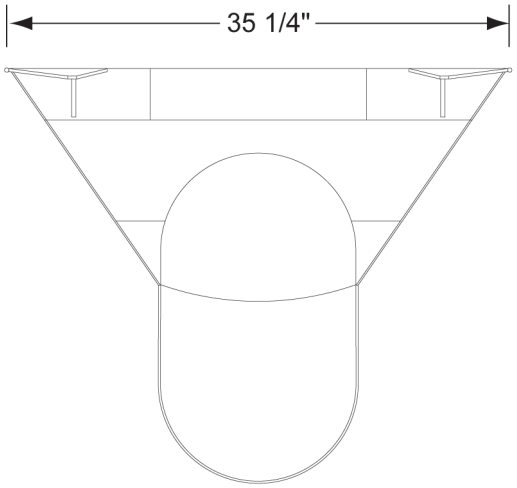

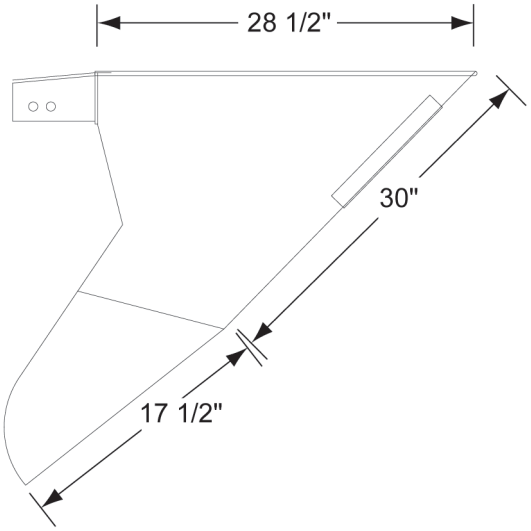

HOPPER ASSEMBLY

0014138 MTM 5041860 CCB

KIMBLE

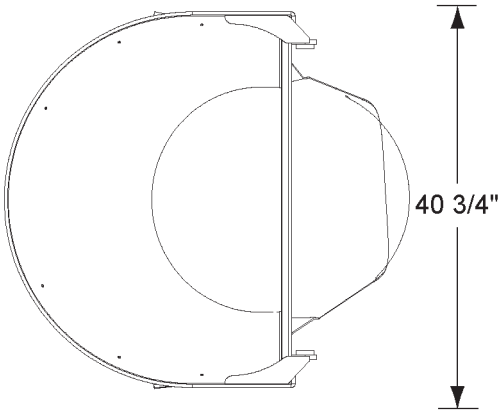

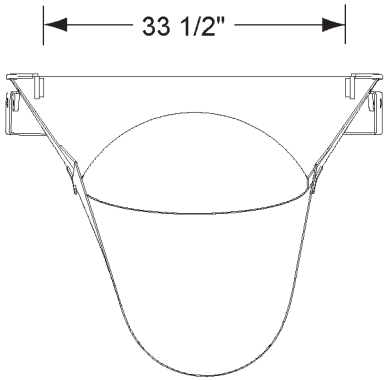

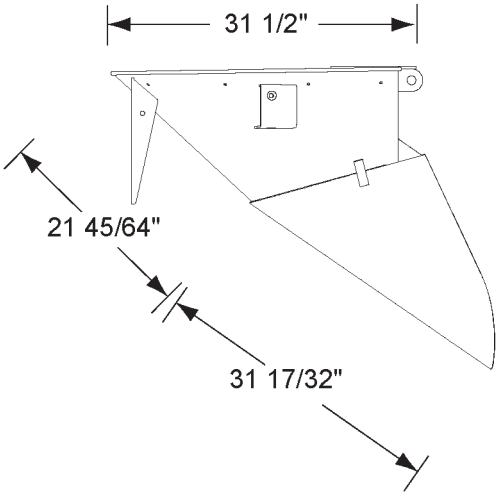

HOPPER ASSEMBLY

1331995 MTM S13-00BQ0-00 KIMBLE

LONDON

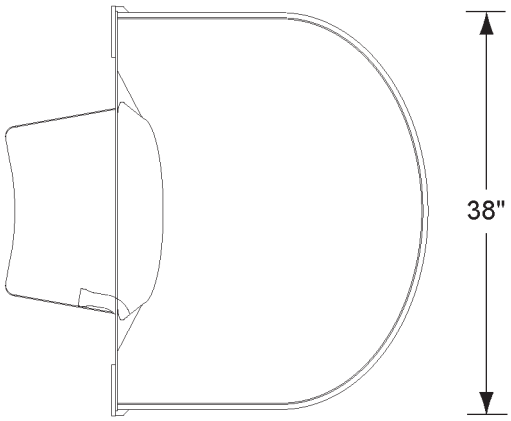

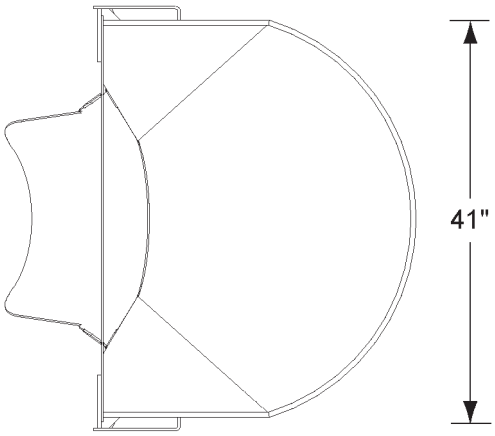

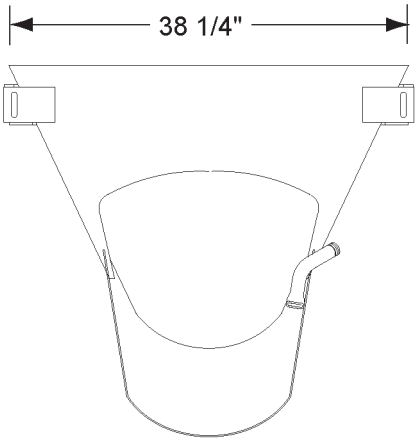

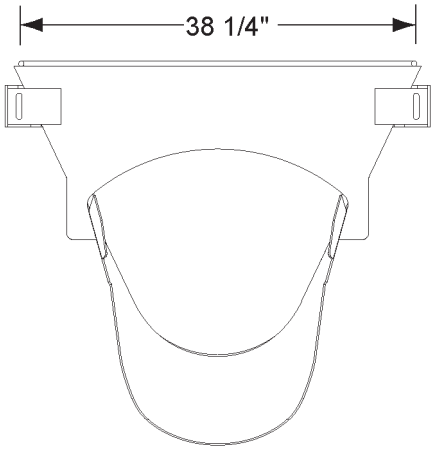

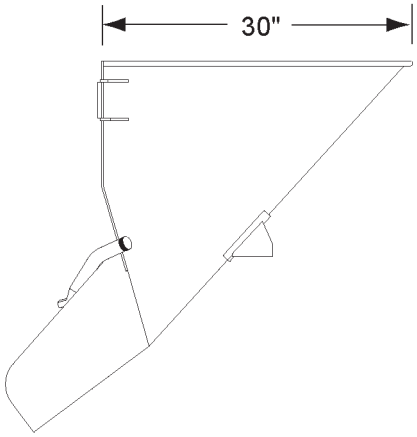

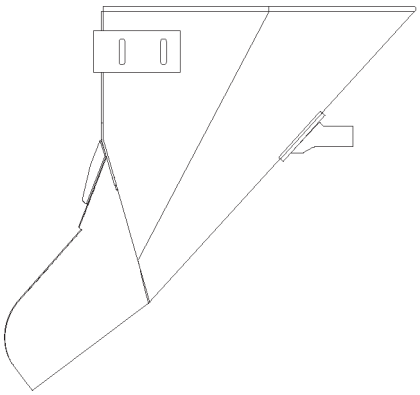

HOPPER - STANDARD

1256040 MTM MD-39753 LONDON

HOPPER - STANDARD

1256050 MTM MD-39666 LONDON

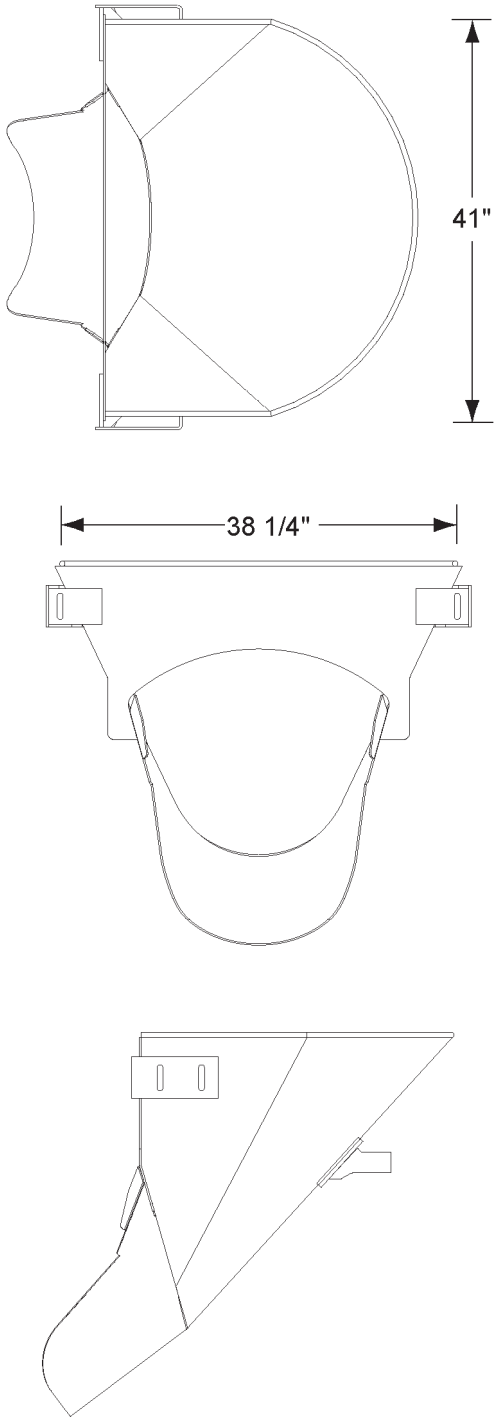

HOPPER - STANDARD

1256050 MTM MD-40195 LONDON

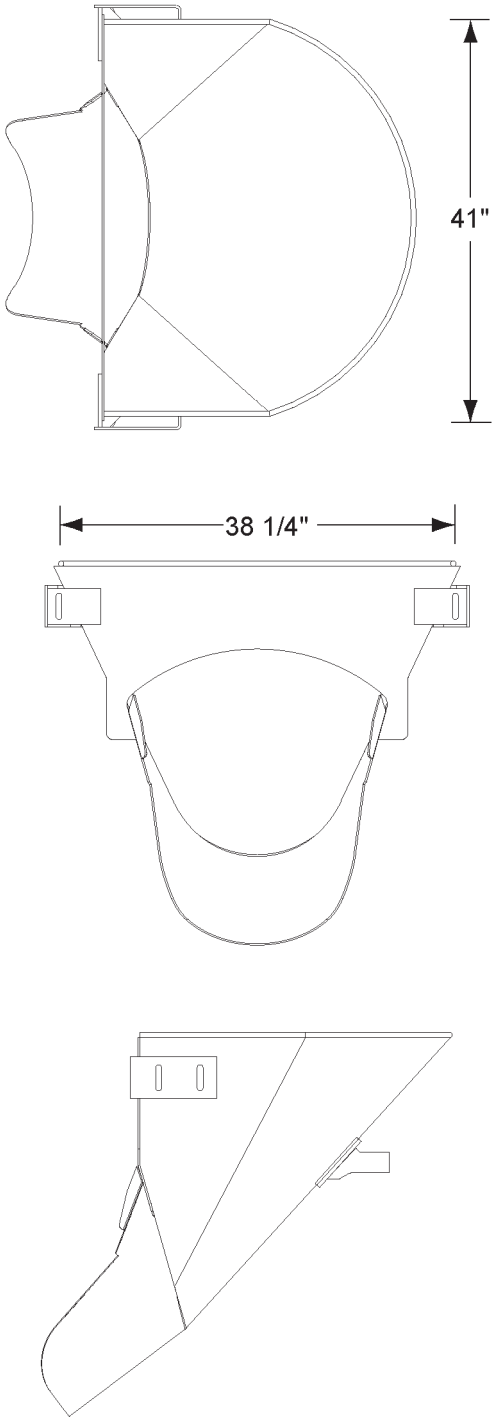

HOPPER - STANDARD

1256050 MTM MD-40195 LONDON

MTM

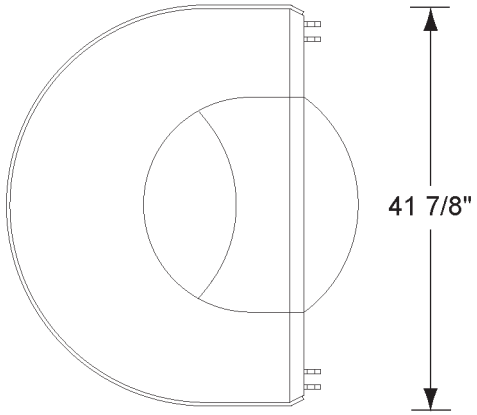

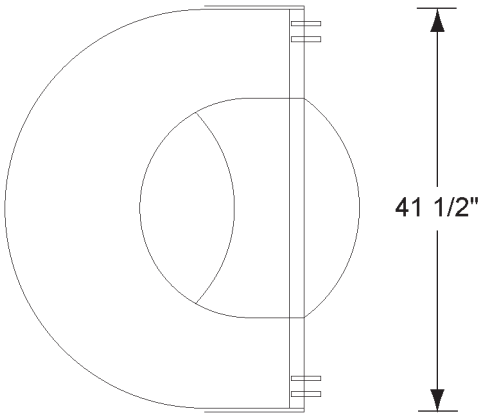

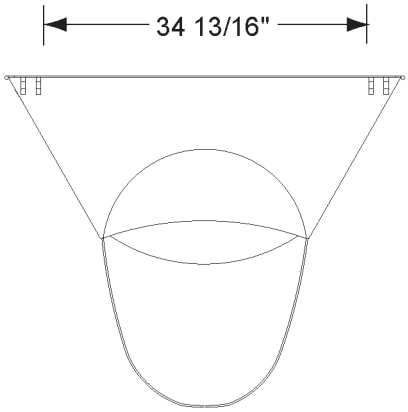

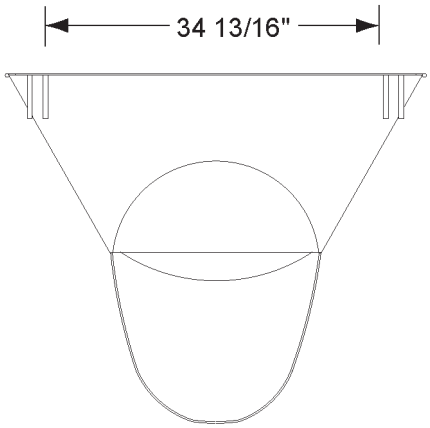

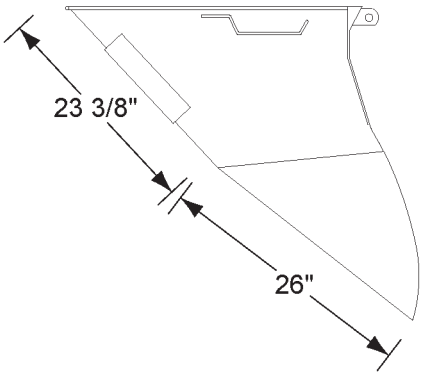

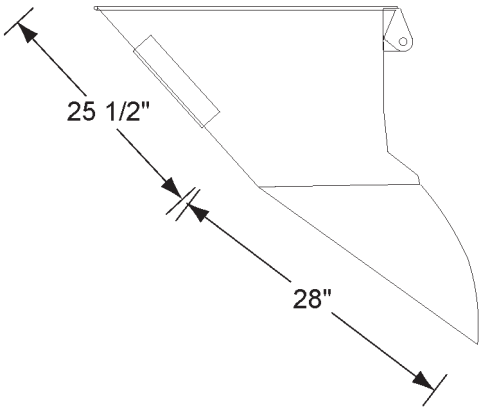

MTM - TYP

0150260 MTM

MTM - STD, NO TIP

0150270 MTM

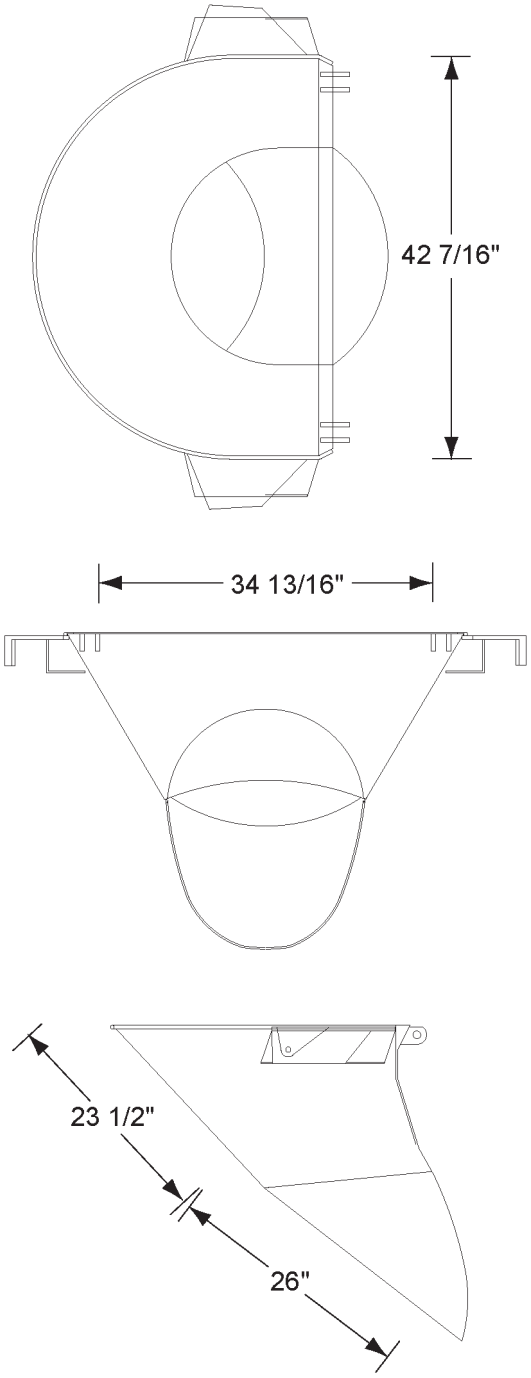

HOPPER - FLIP UP CHARGE

0151260 MTM

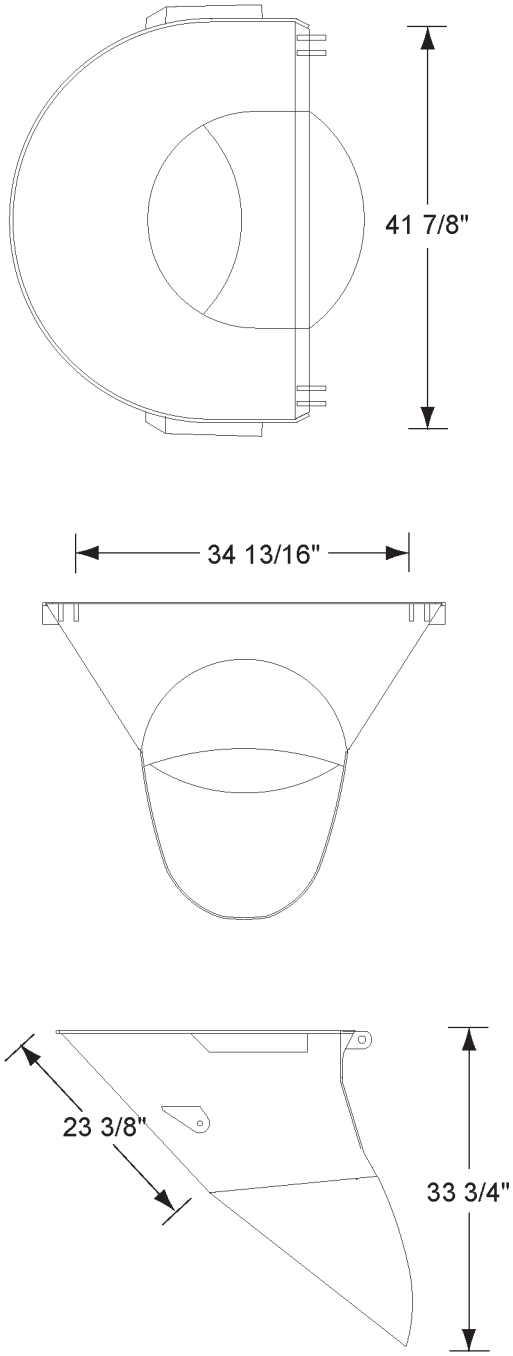

HOPPER - STANDARD LOW TIP UP, '89

0152255 MTM

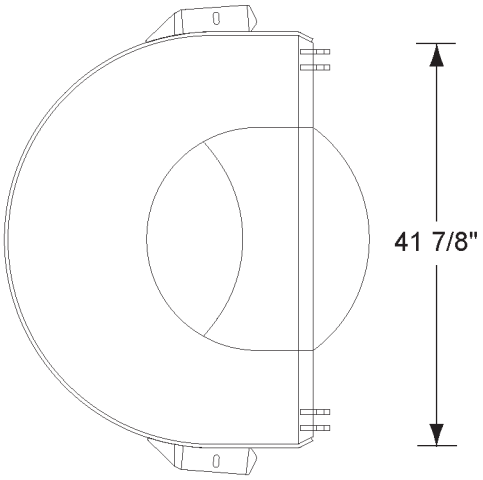

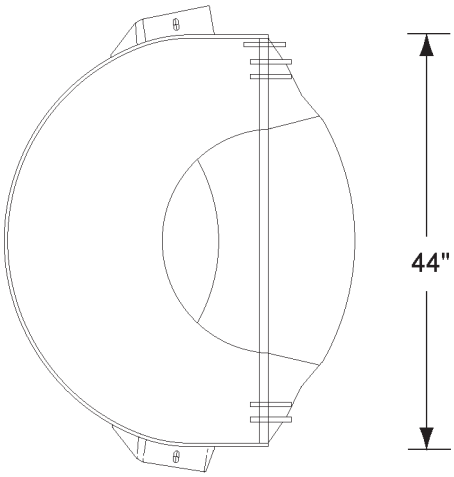

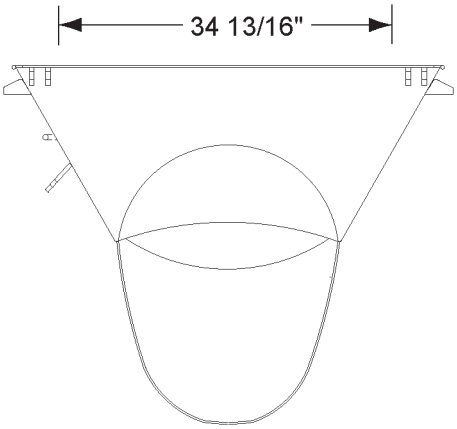

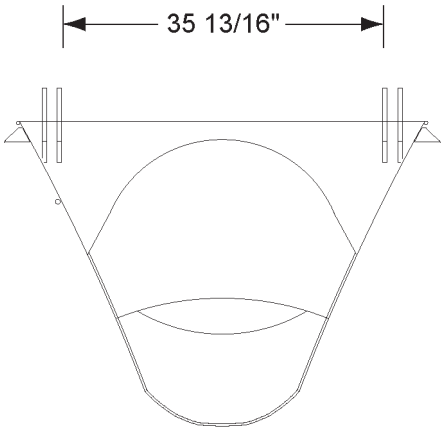

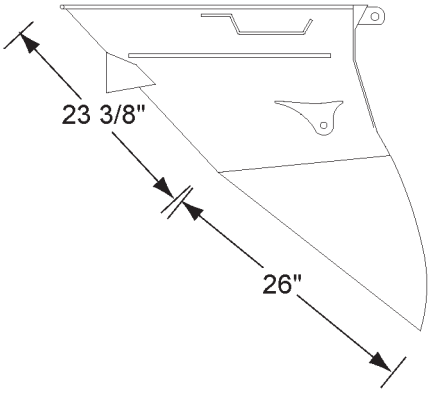

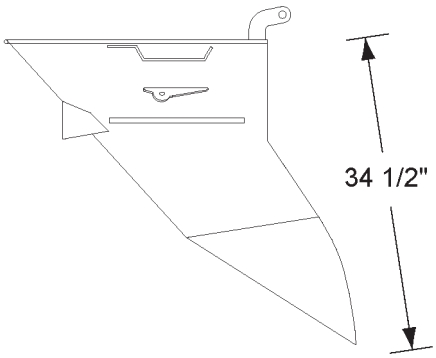

HOPPER - STANDARD, '93

0153370 MTM

MTM - PVR DROP

0153605 MTM

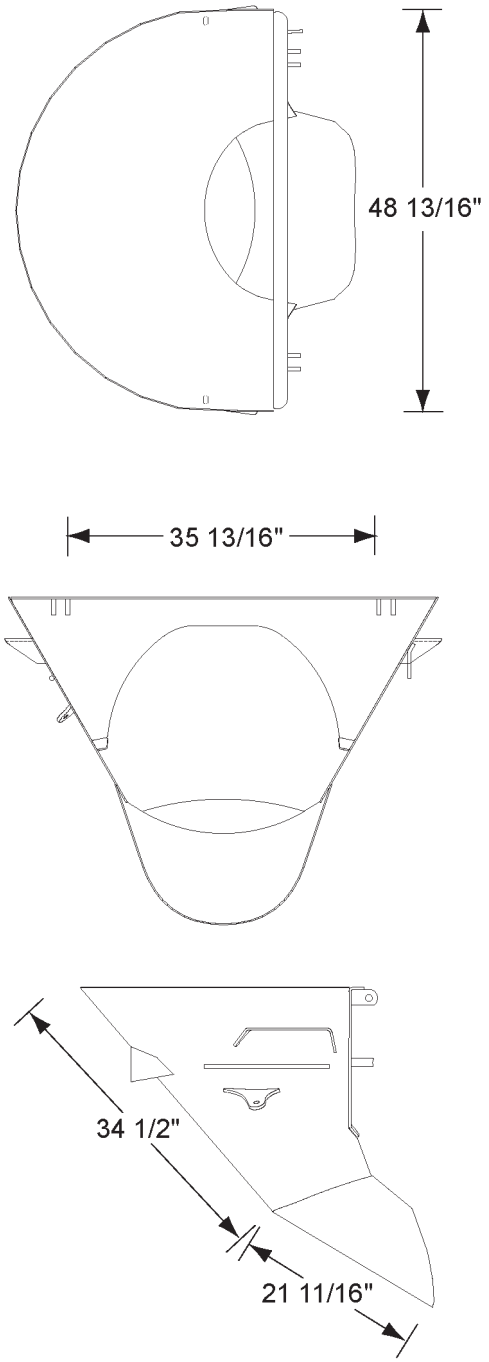

HOPPER - CHARGE PAVER

0155130 MTM

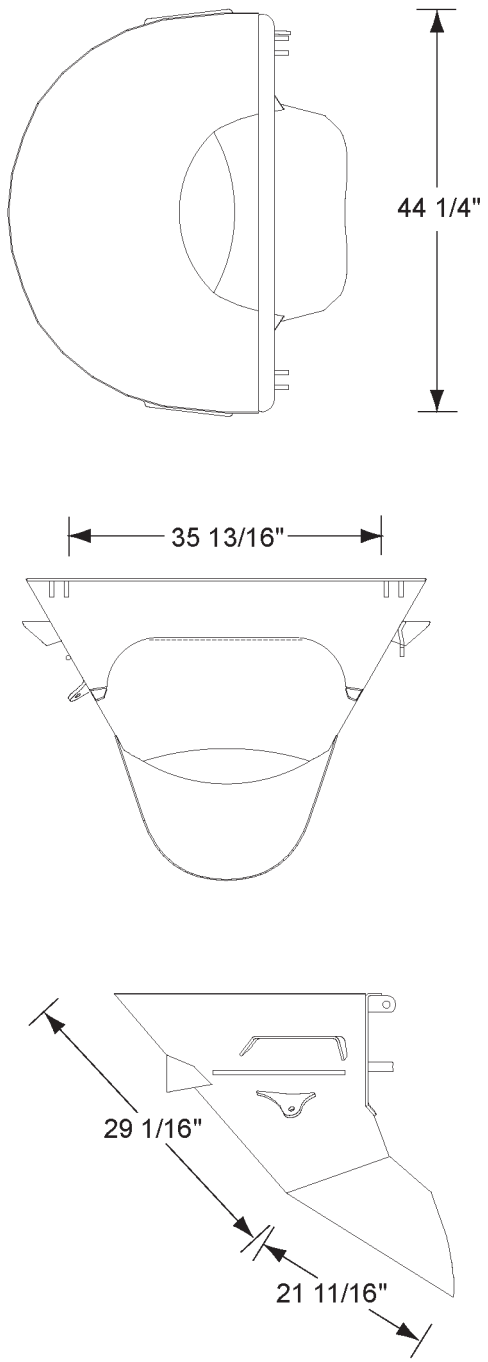

HOPPER - STANDARD CHARGE

0155140 MTM

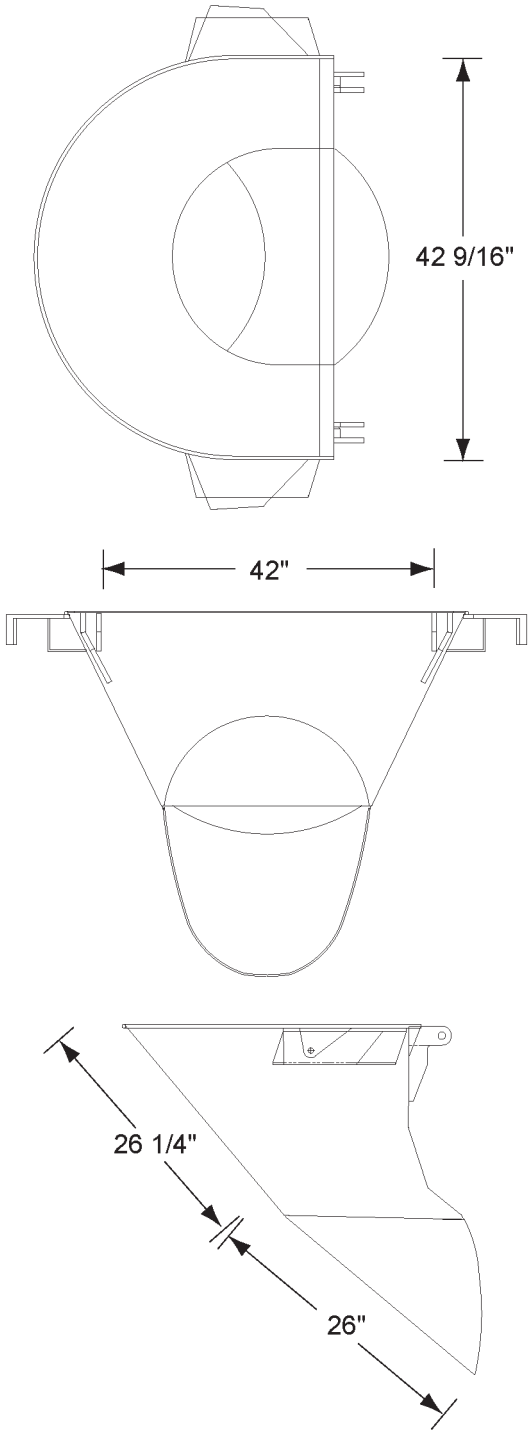

HOPPER ASSEMBLY - FLIP UP CHARGE, BMII

0182250 MTM

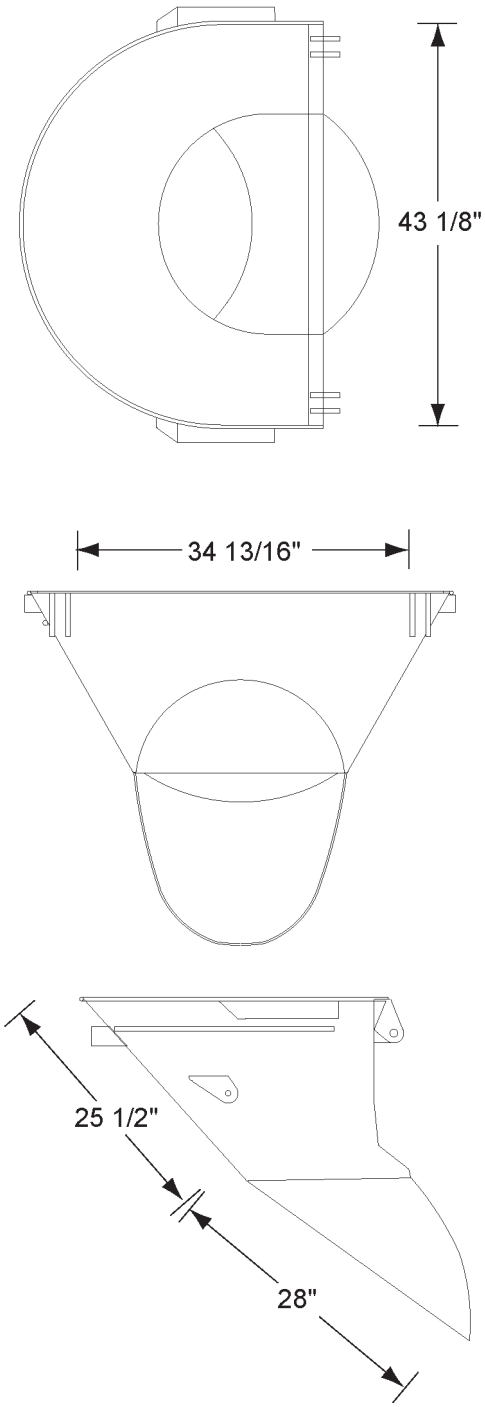

HOPPER - CHARGE, HIGH TIP UP, '89

0182260 MTM

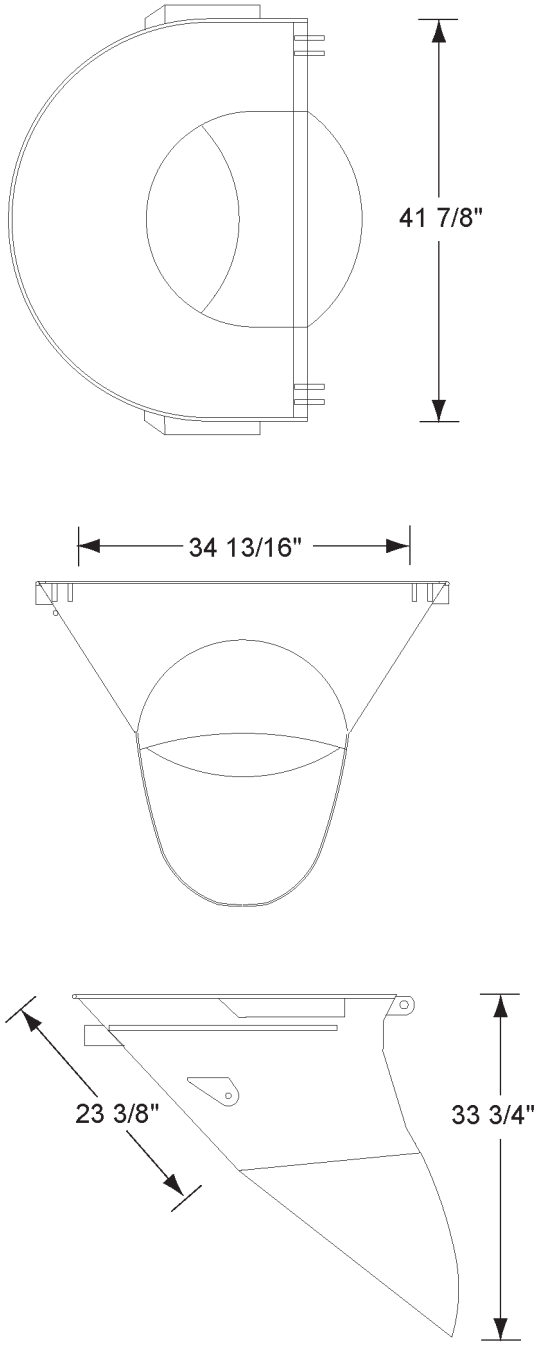

HOPPER - CHARGE, LOW TIP UP, '89

0182262 MTM

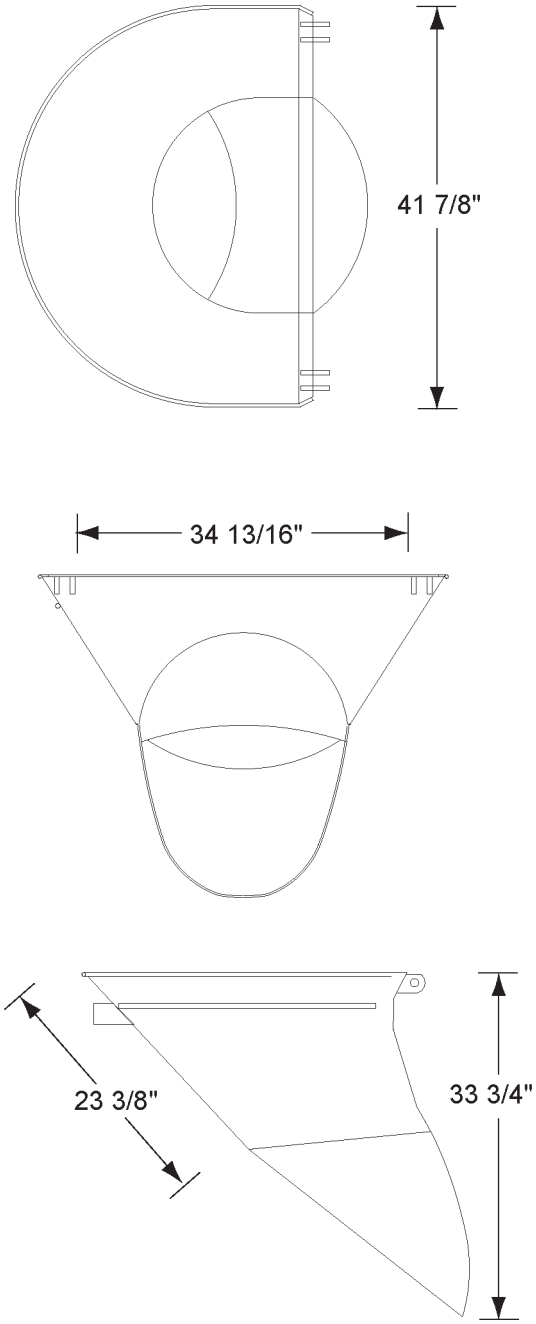

HOPPER - CHARGE, LOW STANDARD

0182263 MTM

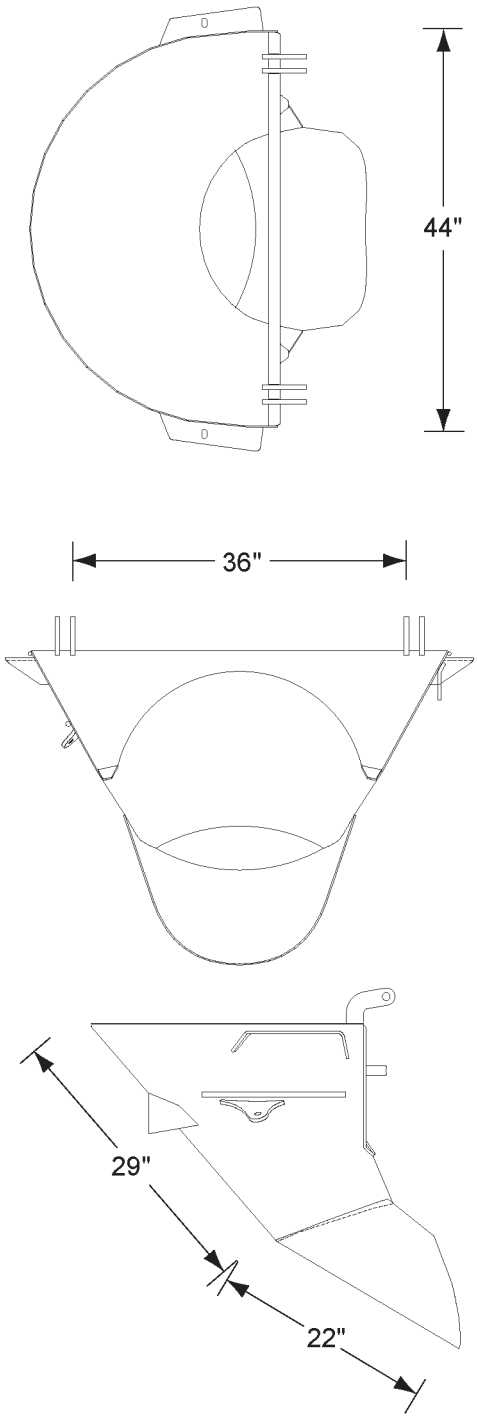

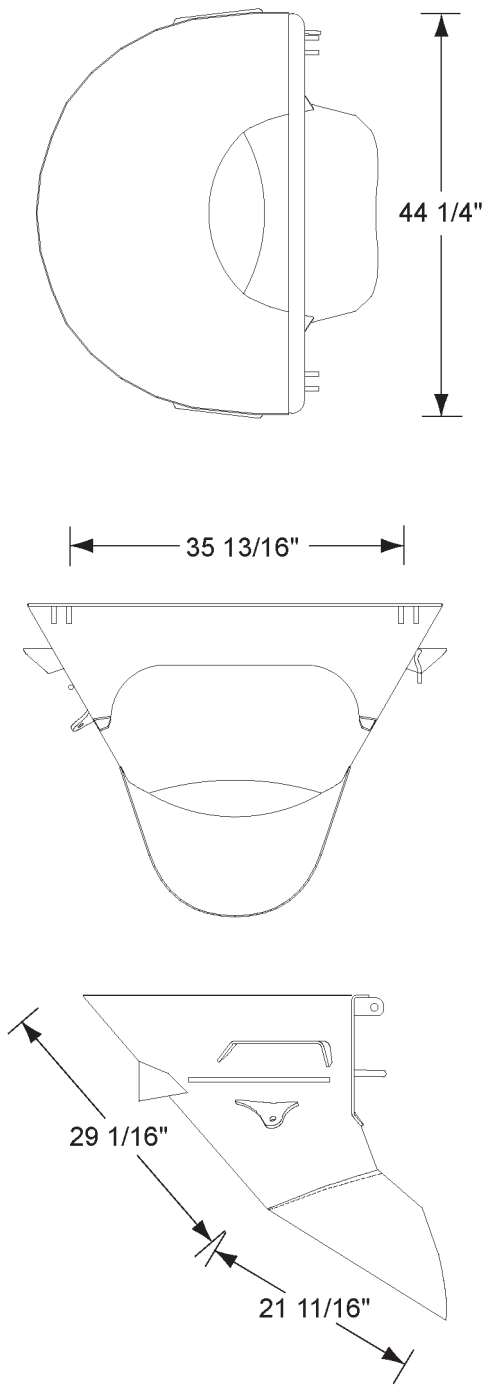

HOPPER - CHARGE, PAVER DROP

1105498 MTM

HOPPER - STANDARD CHARGE W/LINER

1130106 MTM

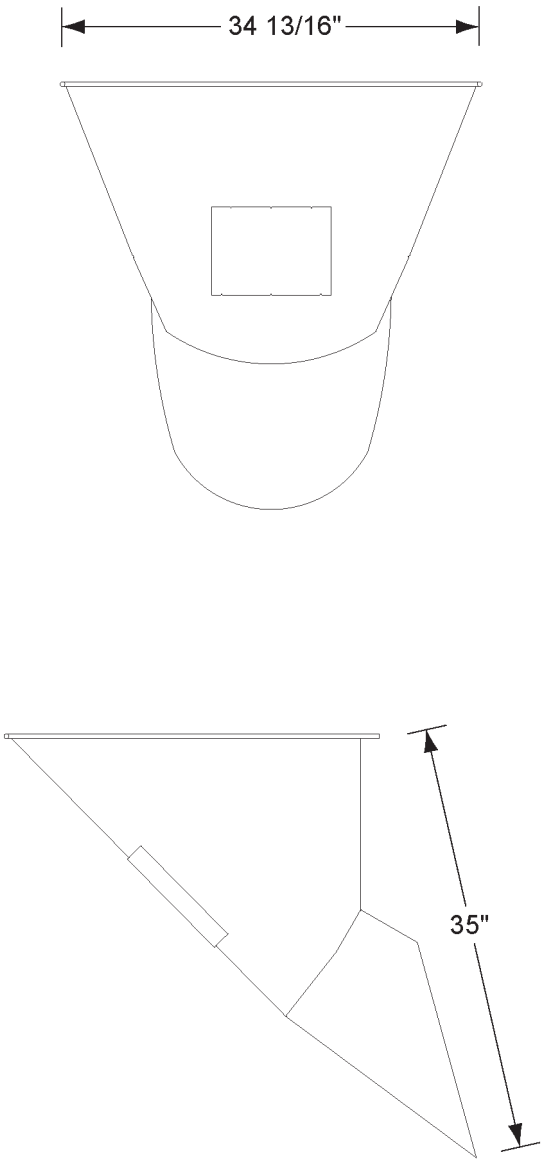

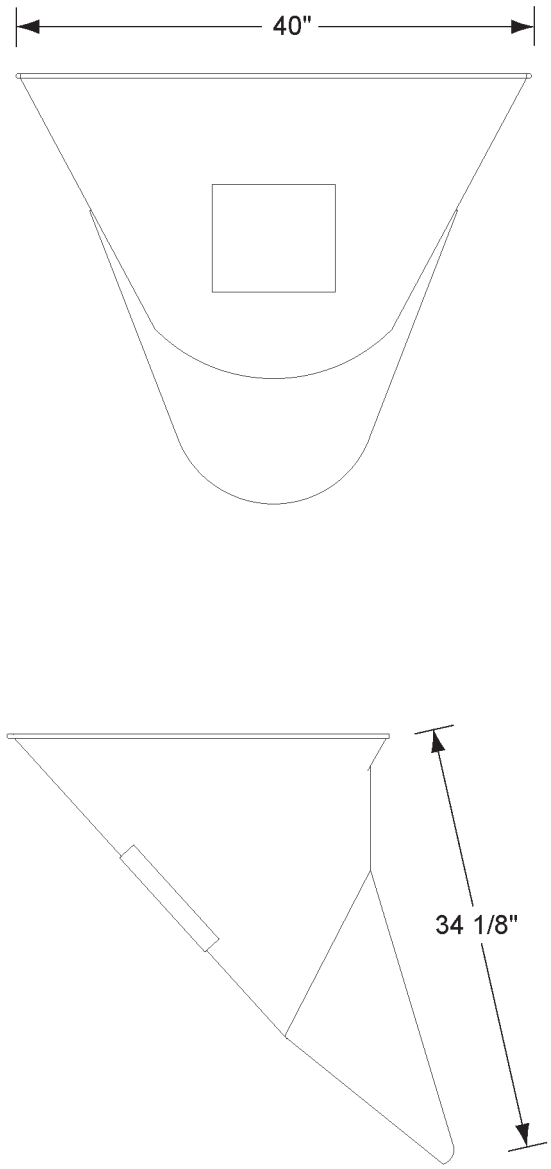

HOPPER - STANDARD CHARGE

1179550 MTM

HOPPER - STANDARD CHARGE, LARGE

1180001 MTM

REX

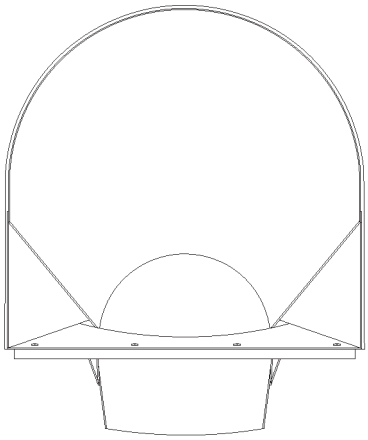

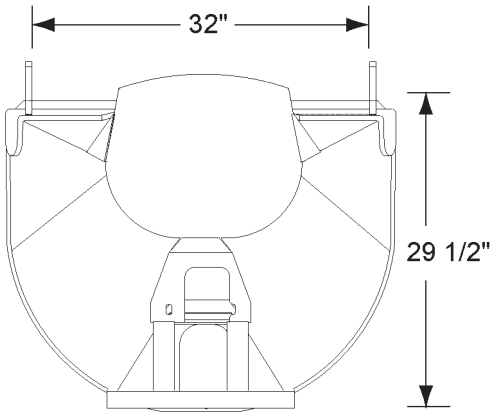

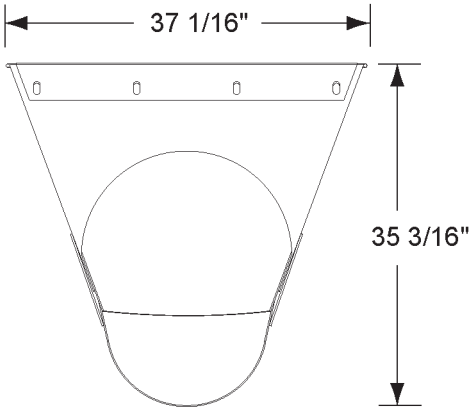

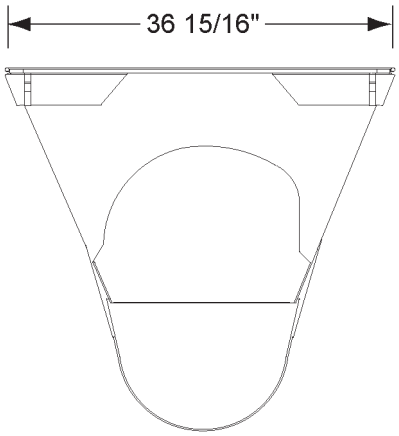

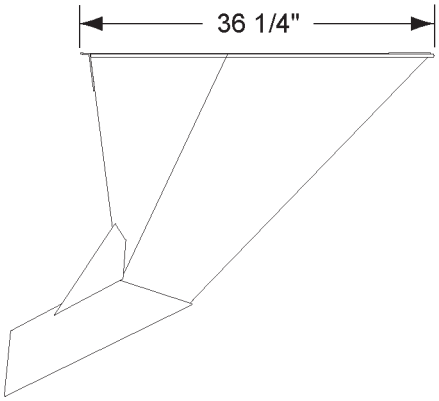

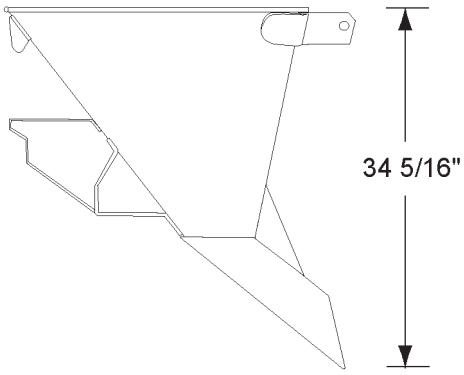

HOPPER - MARK III PAVER

1113473 MTM 502-06060-80 REX

HOPPER - RLM

1113511 MTM 502-06693-80 REX

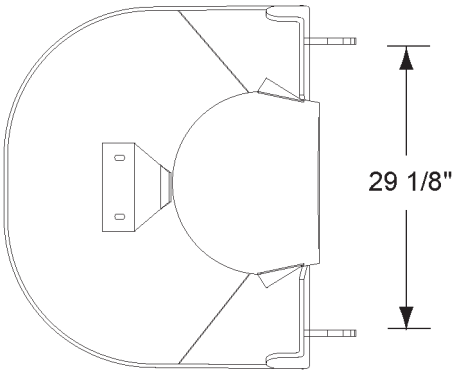

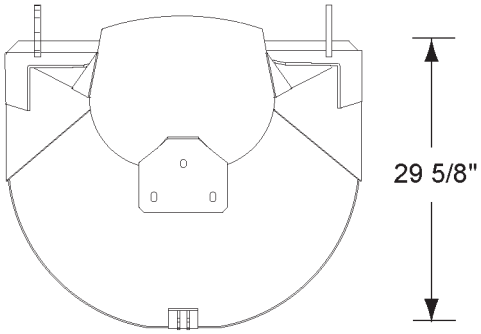

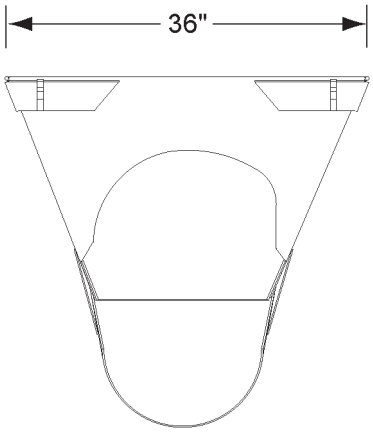

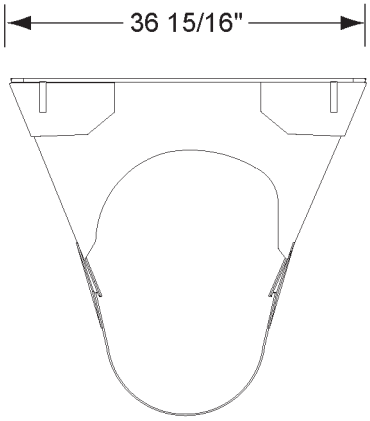

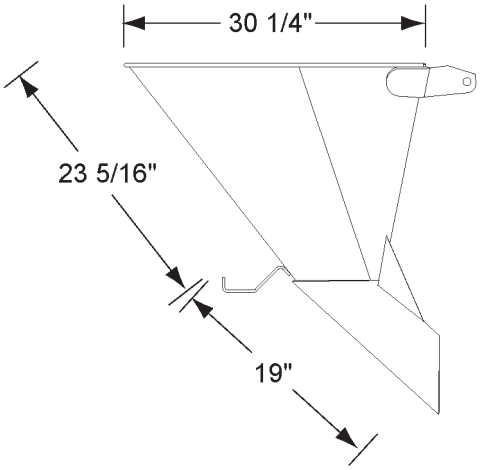

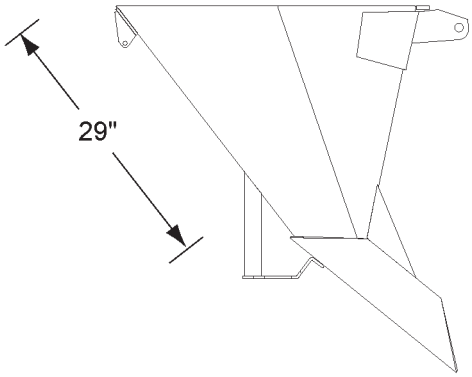

REX - PHASE II

0044030 MTM 502-06825-80 REX

REX - RLX

1113194 MTM 502-09306-80 REX

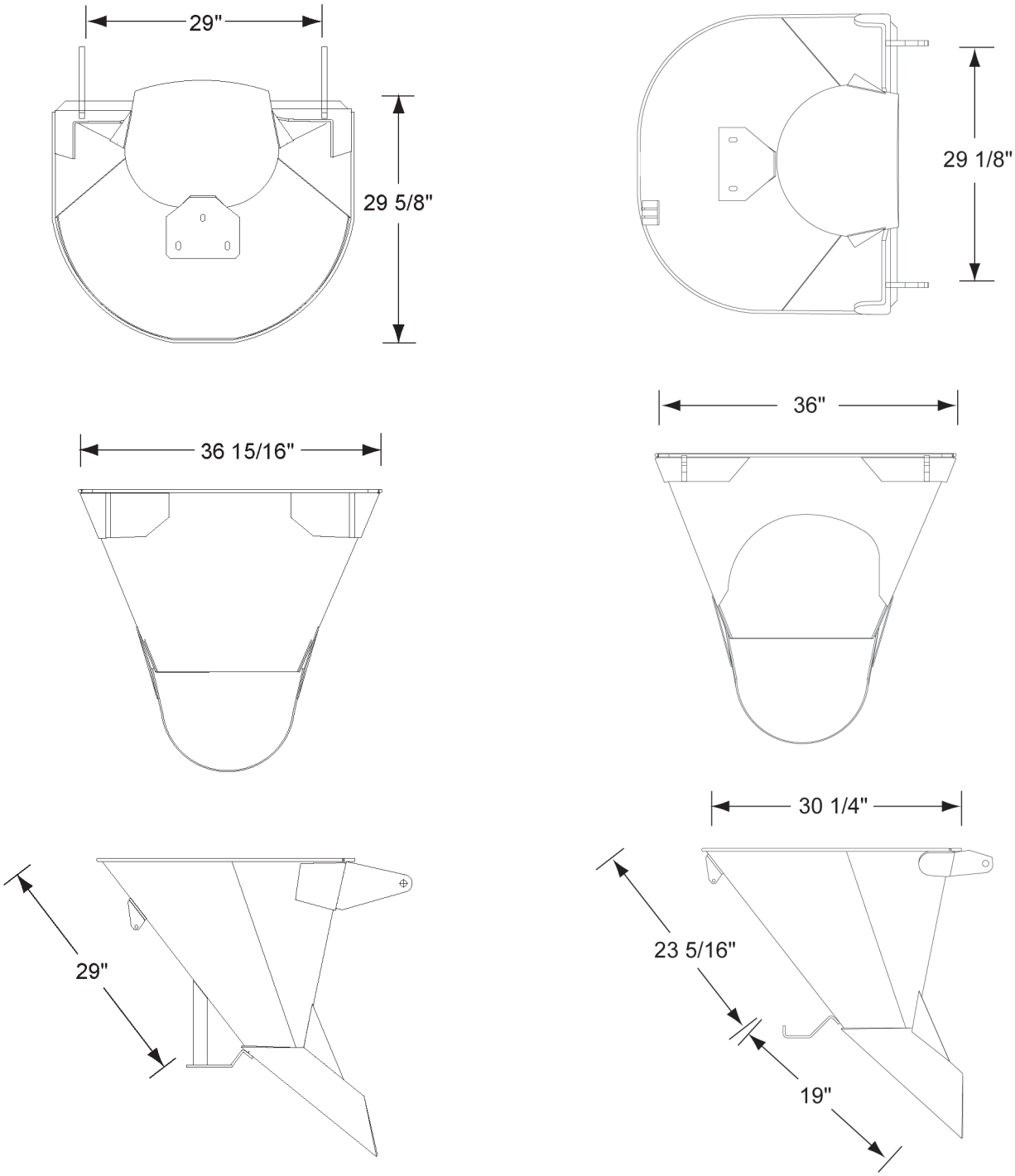

HOPPER - XJR, XJK, RHM, RHK, RHZ

1110367 MTM 502-09394-80 REX

HOPPER - CHARGE, W/ PIVOT BRACKET

1114481 MTM 502-20674-80 REX

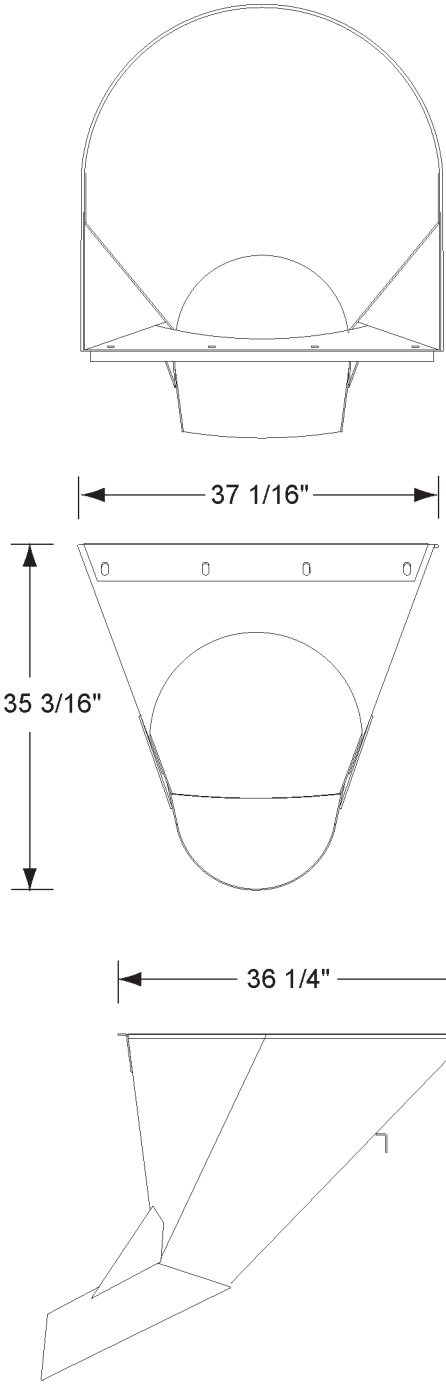

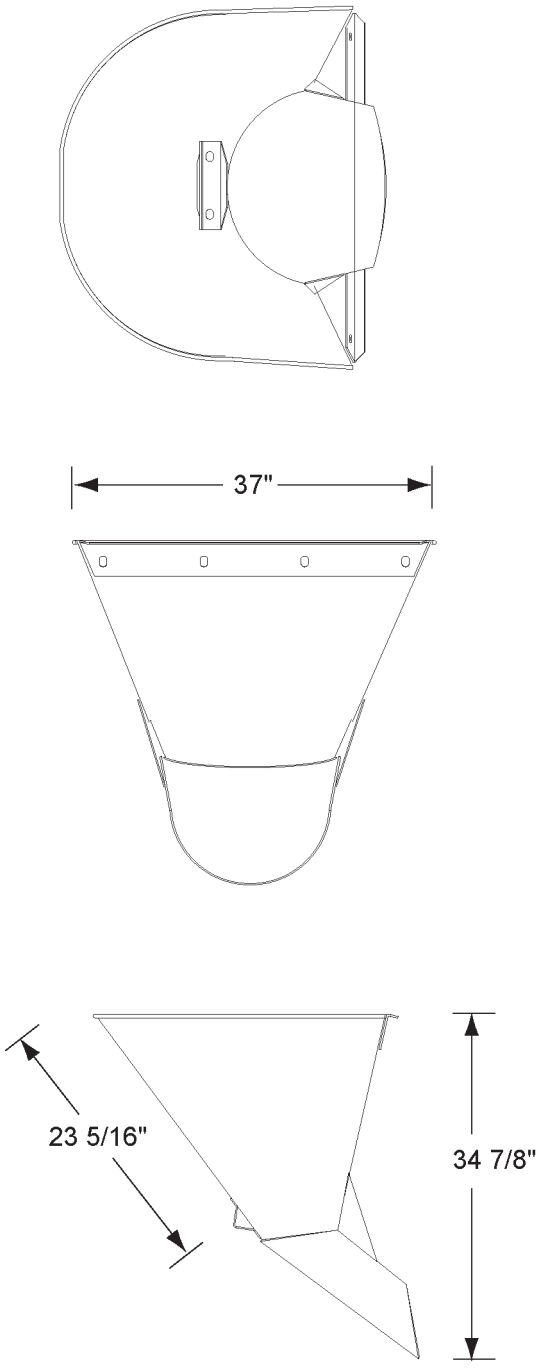

HOPPER - LINED, w/LIGHT BRACKET

1114517 MTM 502-06060-81 REX

HOPPER - CHARGE, NON TIP

1114625 MTM 502-05687-81 REX

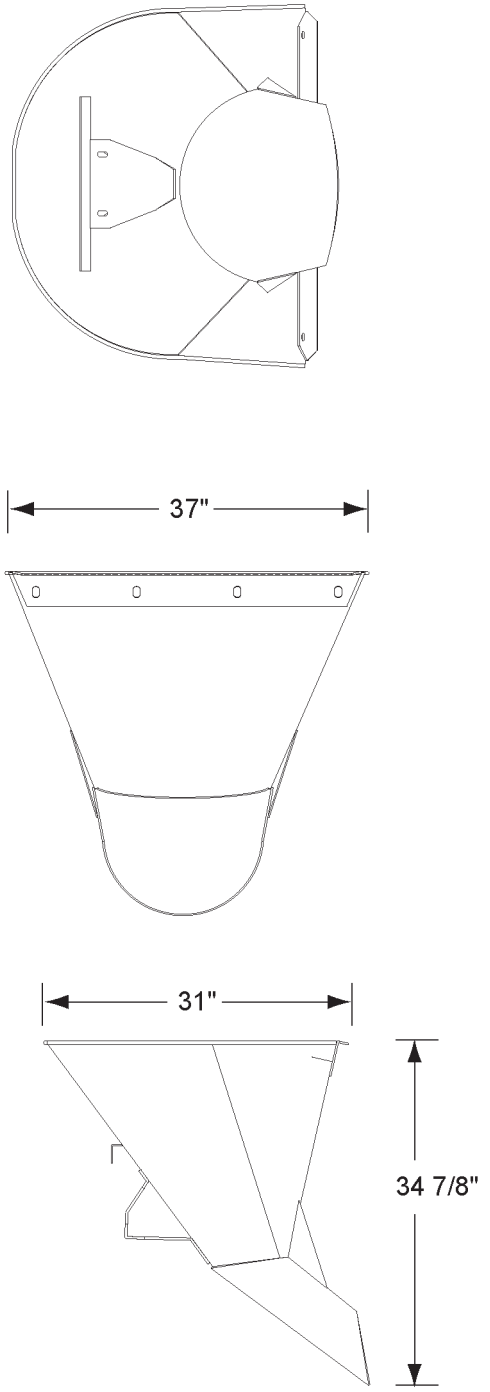

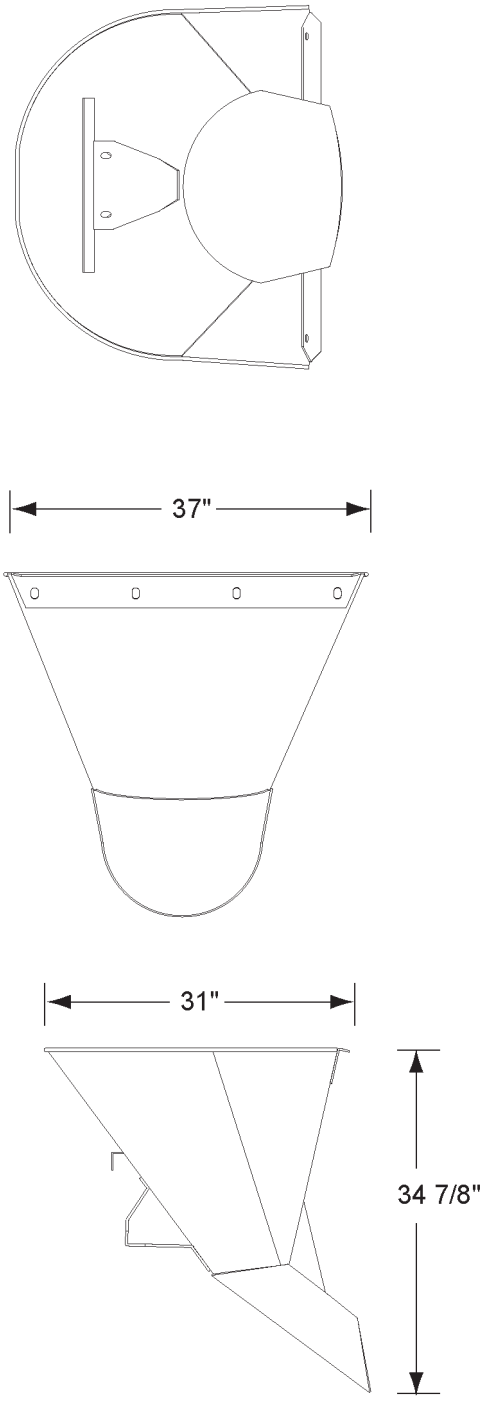

HOPPER - BOOSTER CHARGE

0044000 MTM 502-05687-82 REX

HOPPER - CHARGE, NON TIP

1114241 MTM 502-05687-83 REX

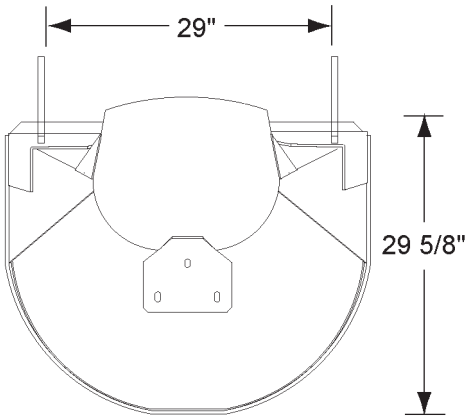

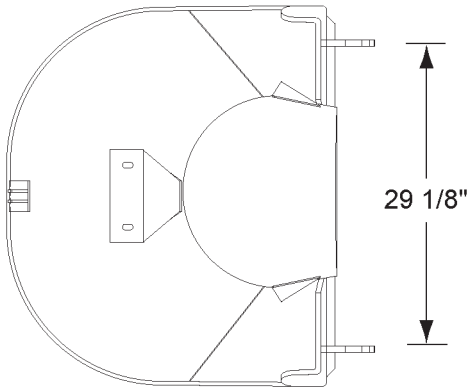

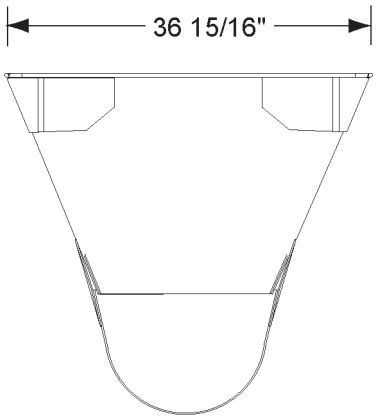

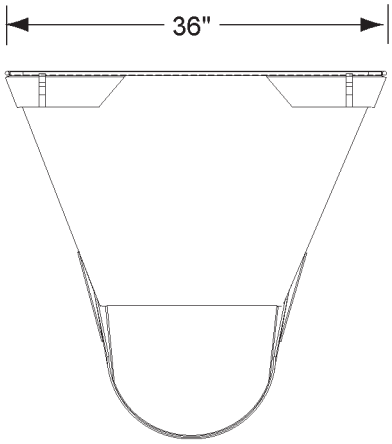

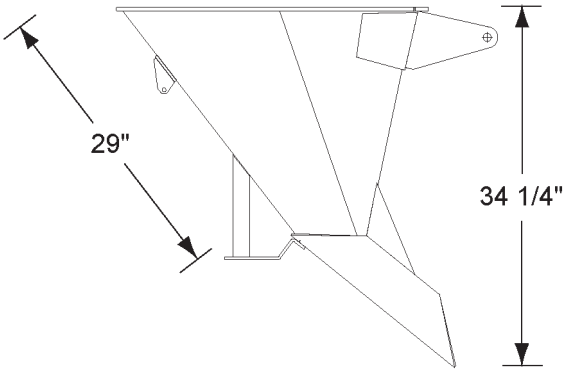

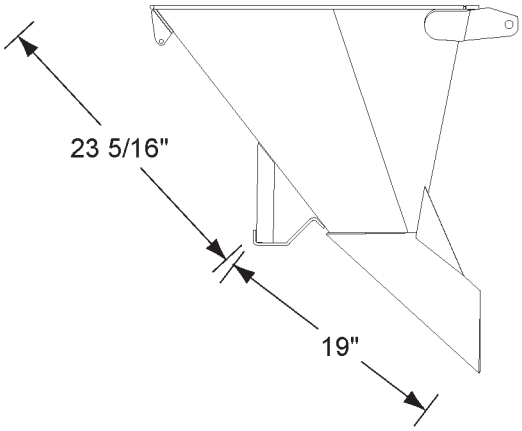

HOPPER - CHARGE, LINED, XHR

1113097 MTM 502-09394-81 REX

HOP- CHARGE, LINED, XUP

1113095 MTM 502-06638-81 REX

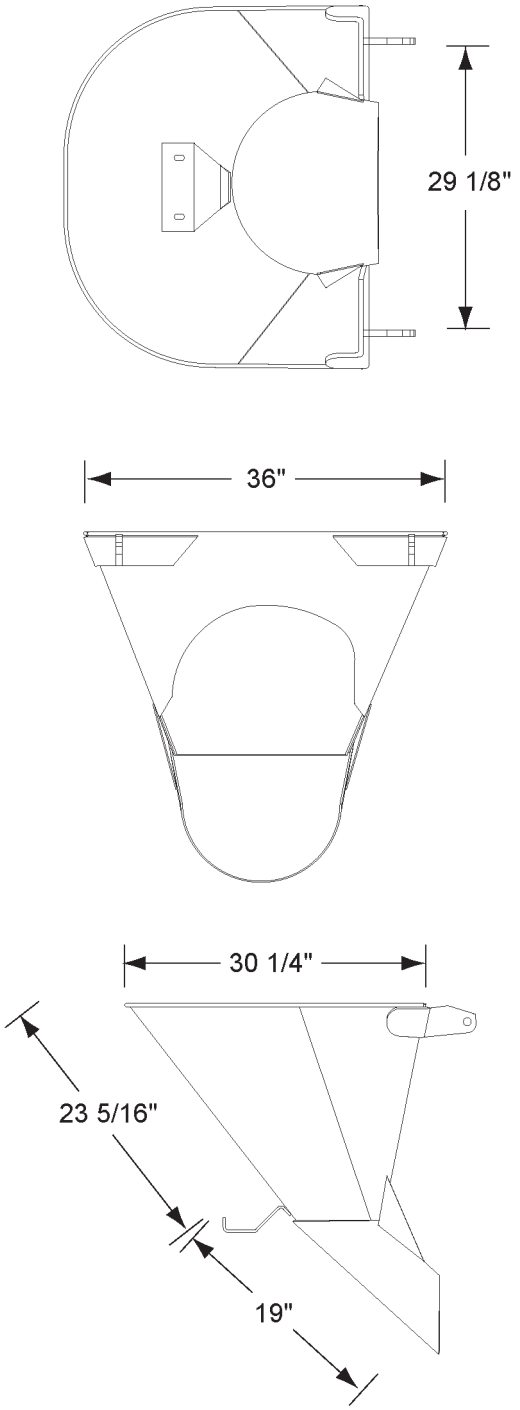

HOPPER - CHARGE, TIP UP, LINED

1114482 MTM 502-20674-81 REX
502-20674-82 REX

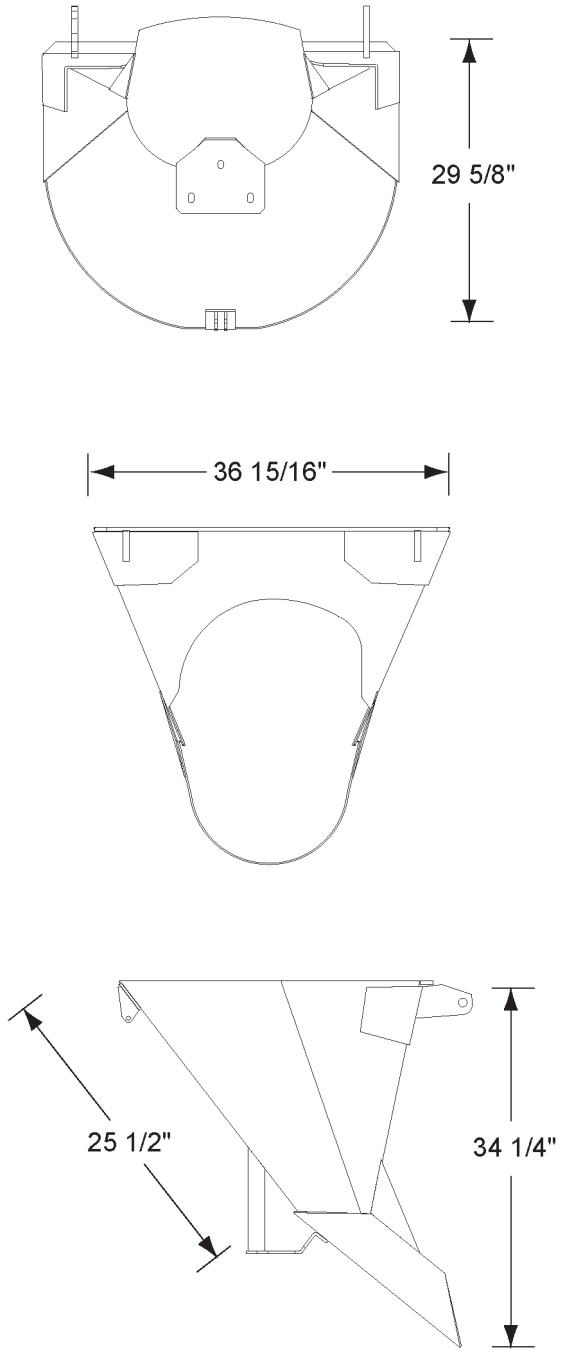

HOPPER - CHARGE, TIP UP, LINED

1114550 MTM 502-20674-83 REX

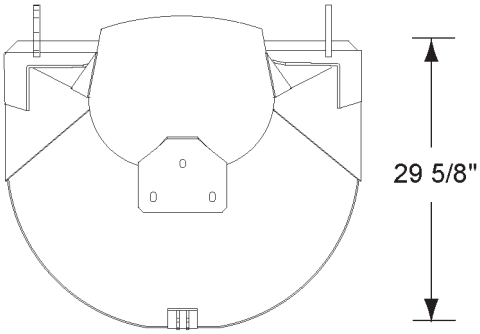

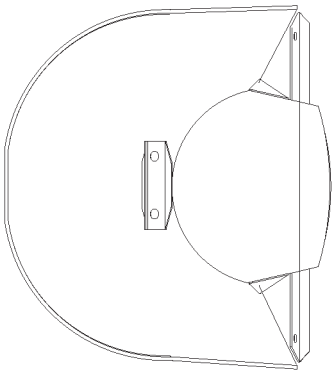

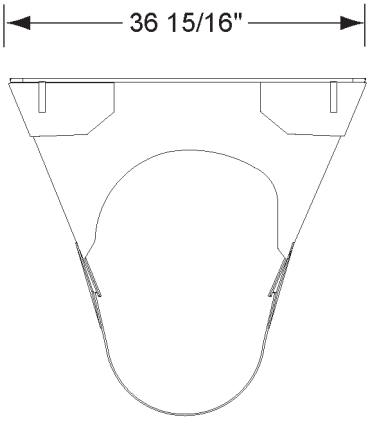

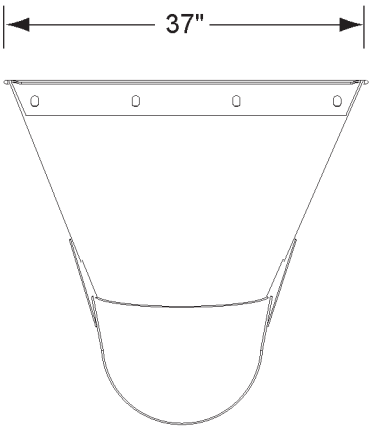

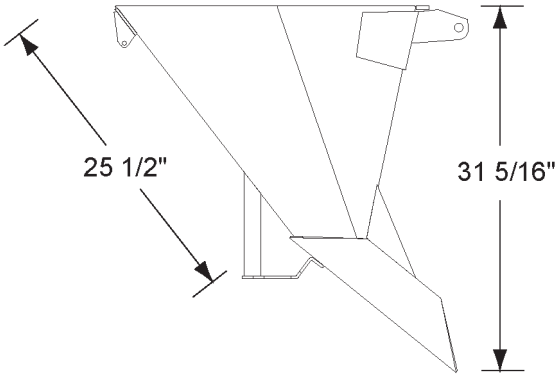

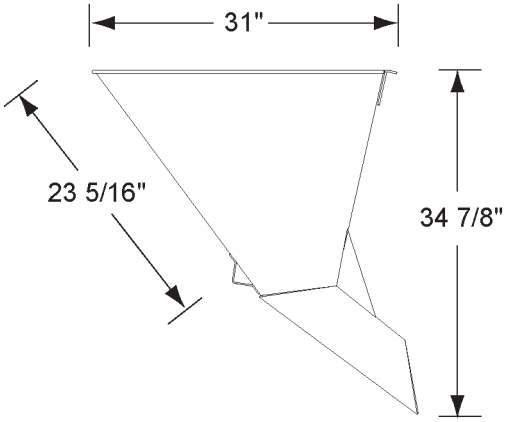

HOPPER - CHARGE, TIP UP

1114551 MTM 502-20674-84 REX

HOPPER - CHARGE, LINED

1114626 MTM 502-04707-80 REX

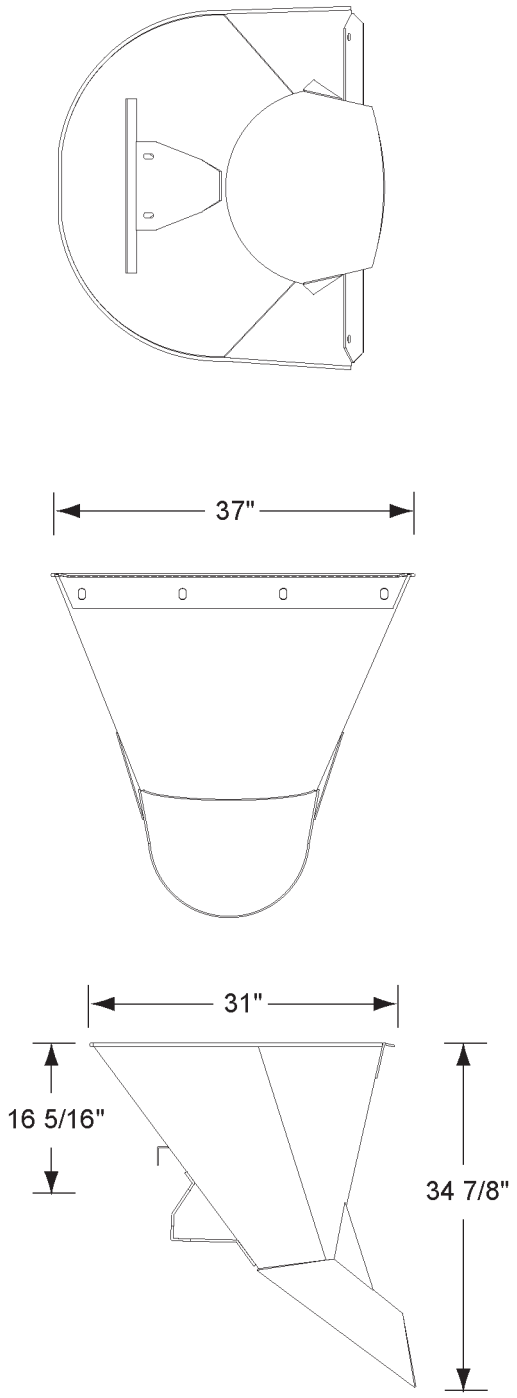

HOPPER - CHARGE, LINED

1114627 MTM 502-04707-81 REX

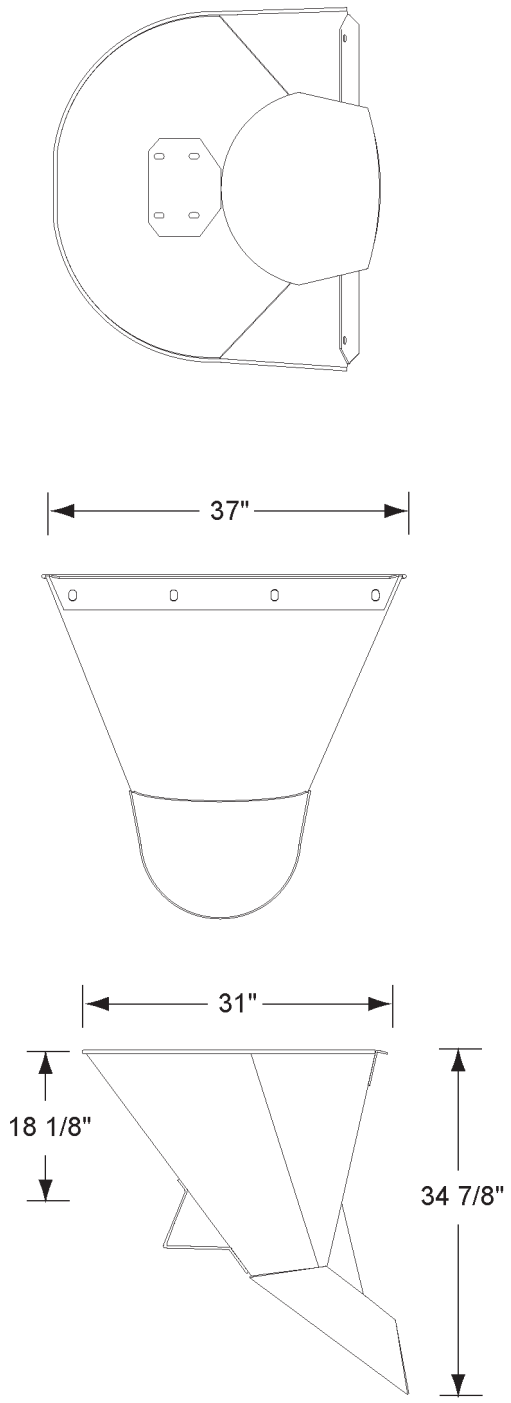

HOPPER - CHARGE, LINED

1114633 MTM 502-04707-82 REX

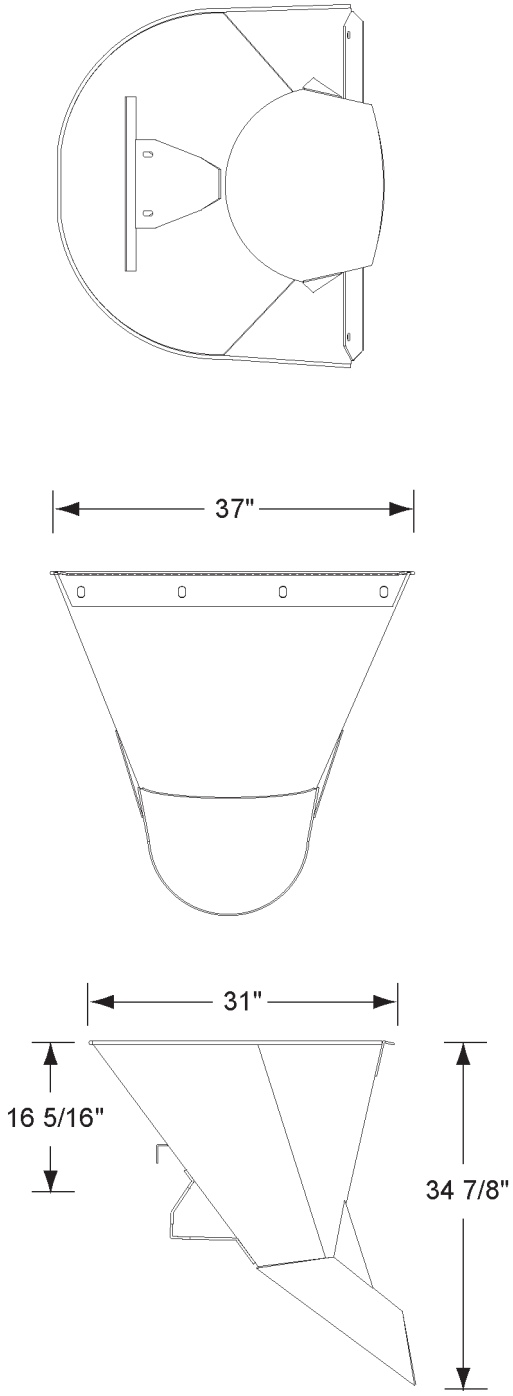

HOPPER - CHARGE, LINED

1114628 MTM 502-04707-83 REX

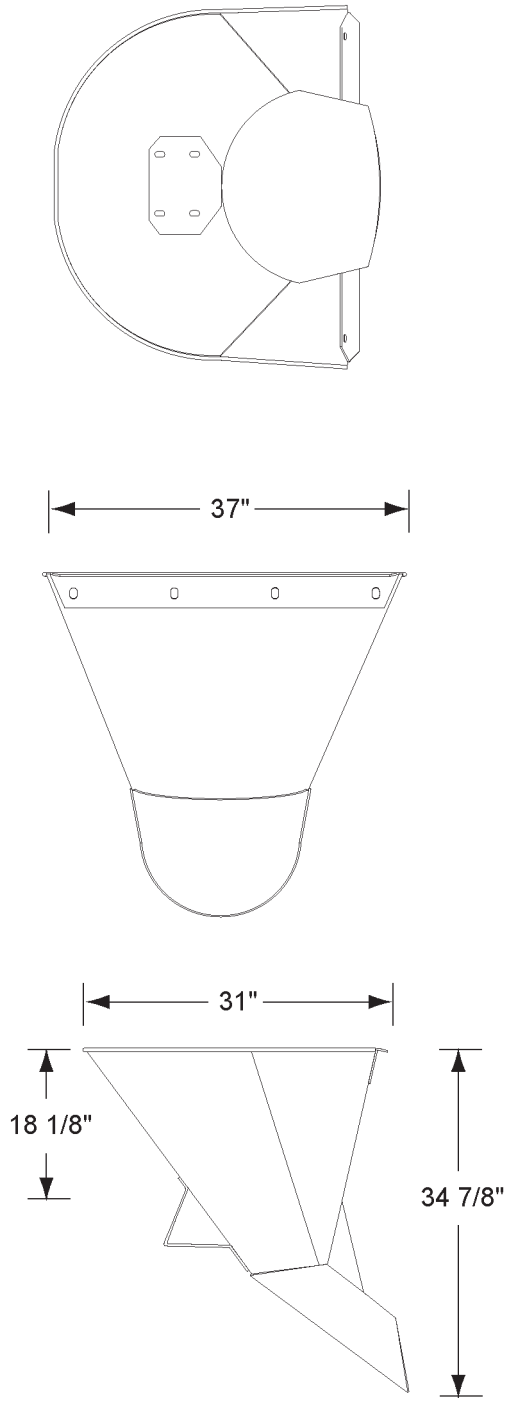

HOPPER - CHARGE, NO TIP

1114630 MTM 502-06600-80 REX

SCHWING

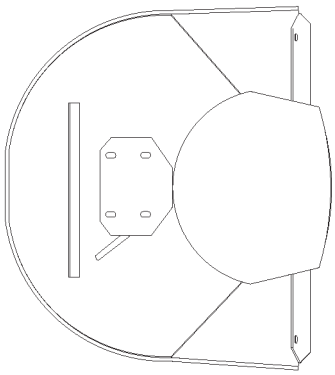

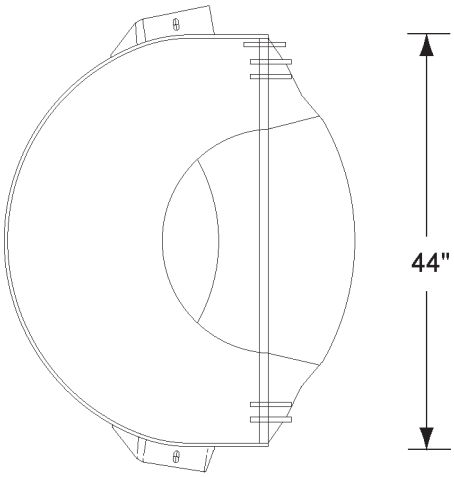

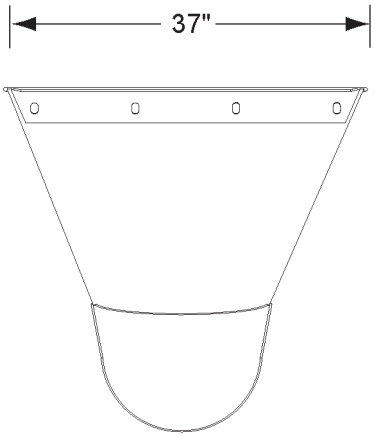

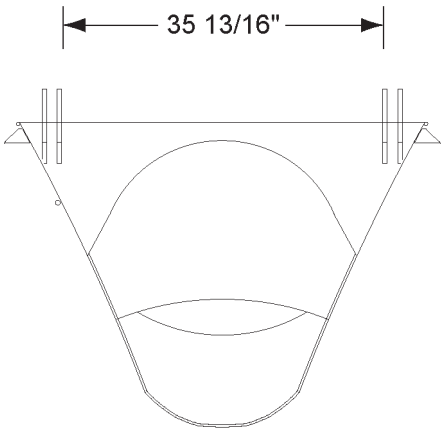

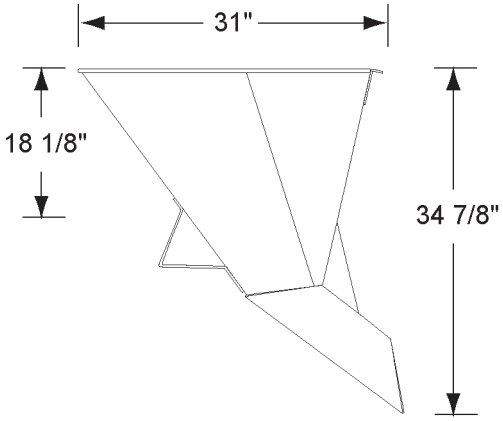

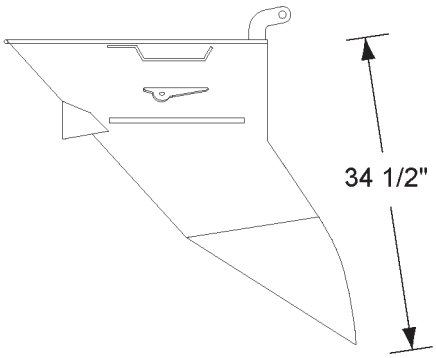

HOPPER - CHARGE, W/LIGHT BAR

1114632 MTM 502-06600-81 REX

HOPPER - CHARGE

0153605 MTM 60306041 SCHWING

SMITH

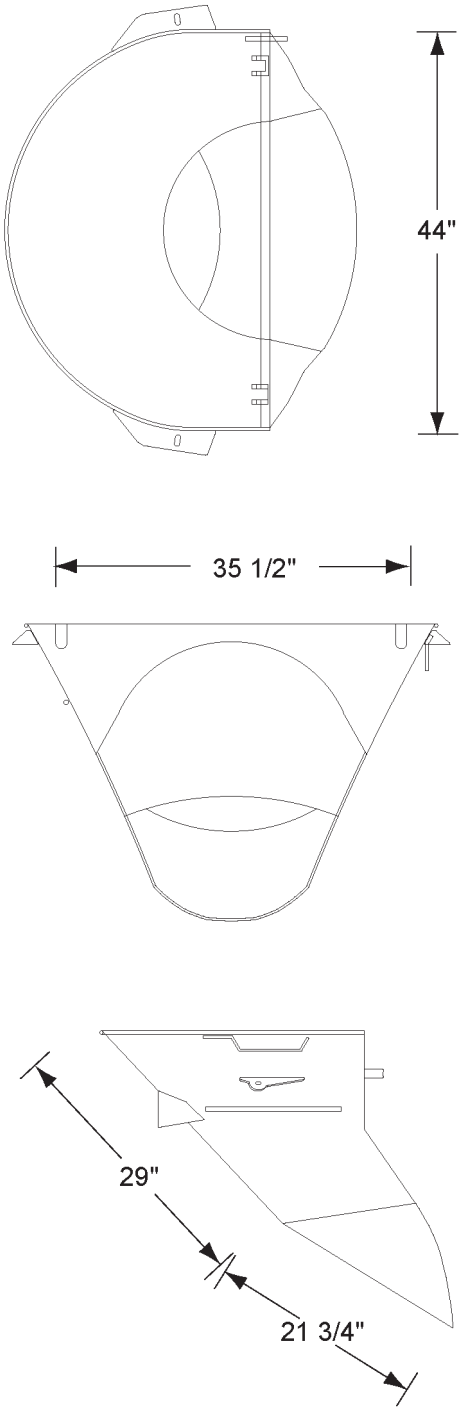

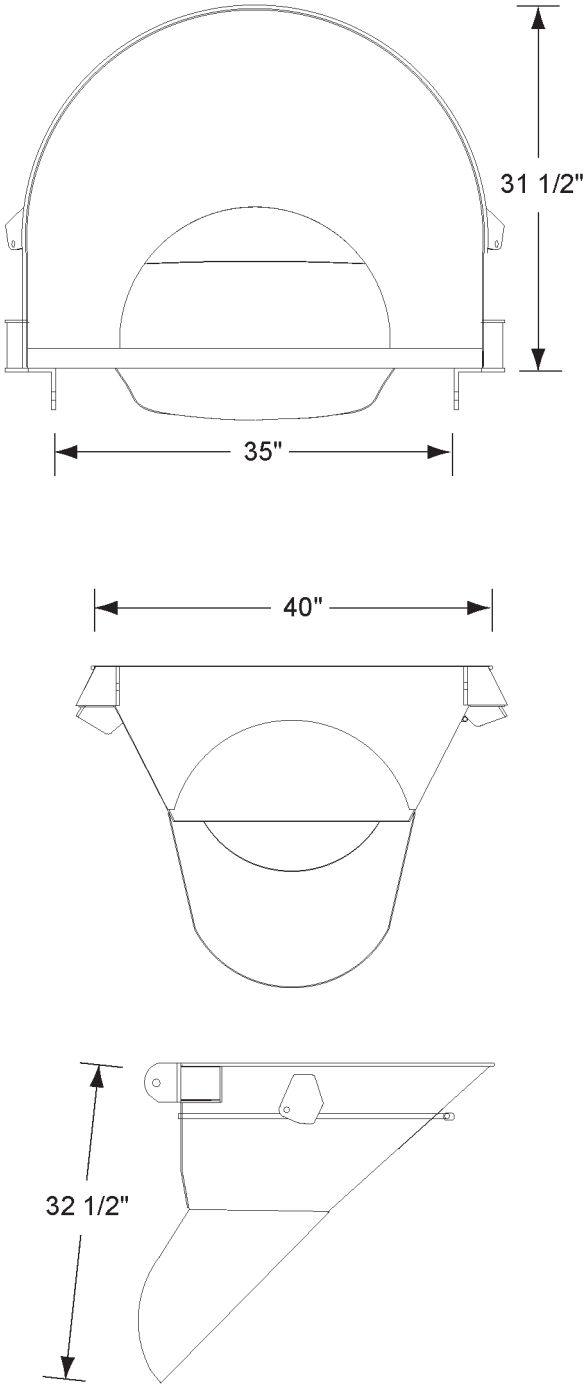

HOPPER - CHARGE, PAVER

1329200 MTM 30386620 SCHWING

HOPPER - CHARGE

1110328 MTM 43940130 SMITH

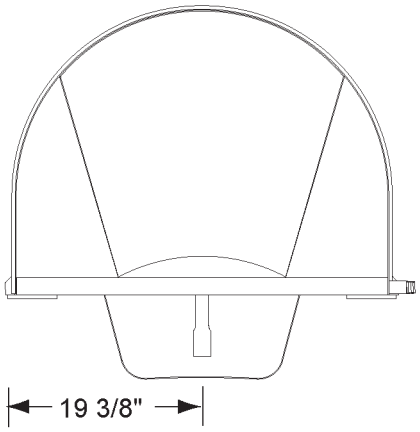

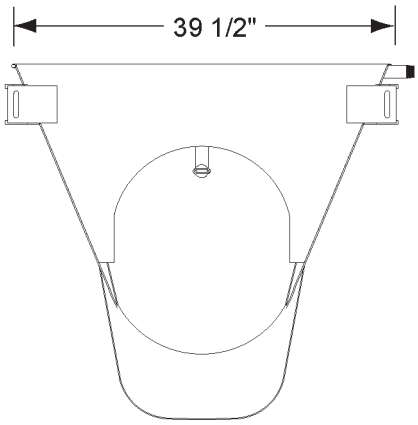

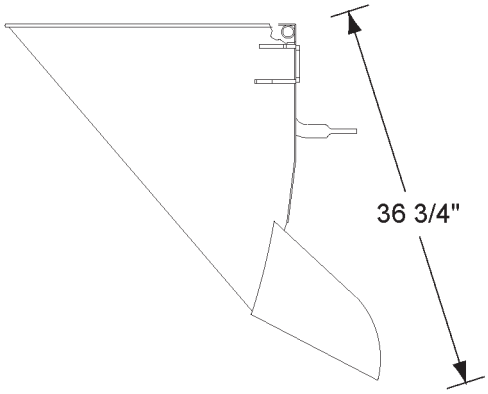

HOPPER ASSEMBLY

1110325 MTM MD-32037 SMITH

THIS PAGE INTENTIONALLY LEFT BLANK

THIS PAGE INTENTIONALLY LEFT BLANK

Collectors

ADVANCE / TEREX

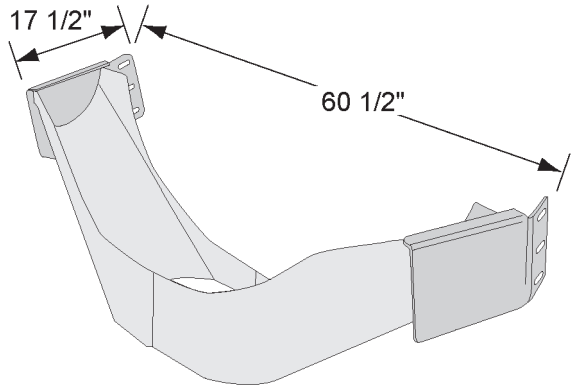

COLLECTOR - CHUTE PAVER

0153535 MTM 40355 TEREX

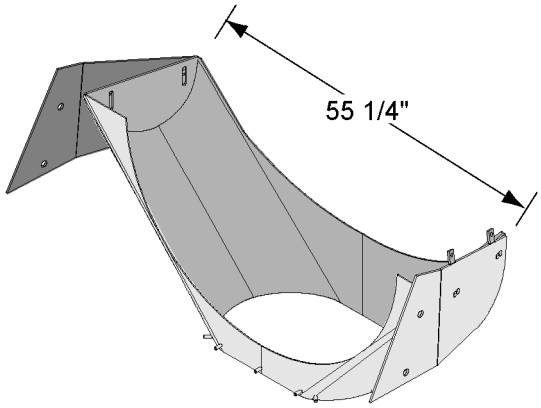

COLLECTOR - CHUTE, STANDARD

1332449 MTM 90550800 CBMW

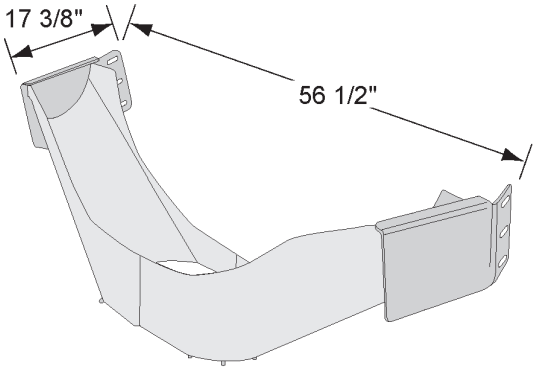

COLLECTOR - CHUTE, STANDARD

0153330 MTM 41655 TEREX

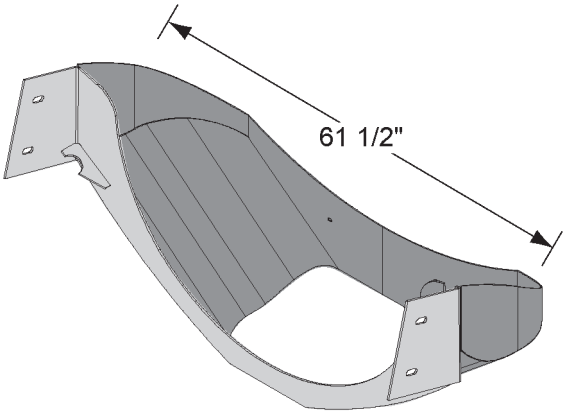

COLLECTOR - CHUTE, PAVER

1333484 MTM 90550700 CBMW

CBMW

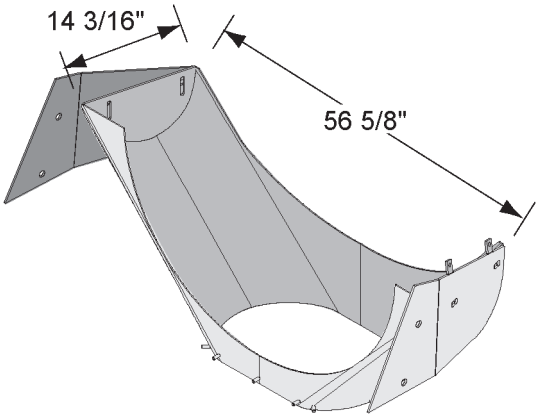

COLLECTOR - CHUTE

1329017 MTM 90550500 CBMW

CCB

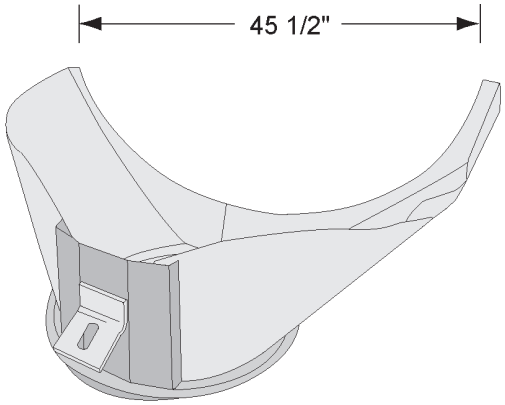

COLL - 10YD, 2BL

0012762 MTM 5044022 CCB

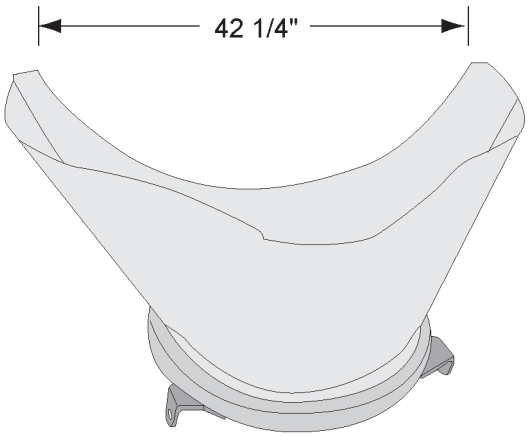

COLL - 12YD

0011390 MTM 5042694 CCB

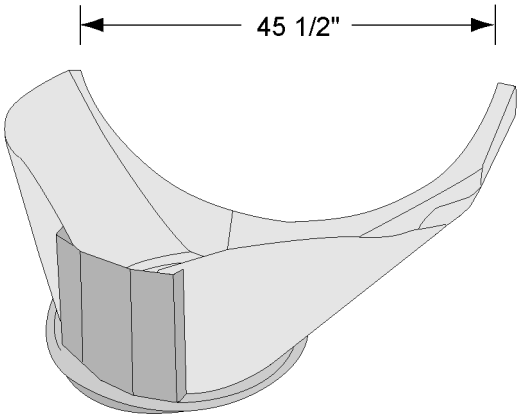

COLLECTOR - PACE, 22" HINGE MOUNT

0014527 MTM 5041375 CCB

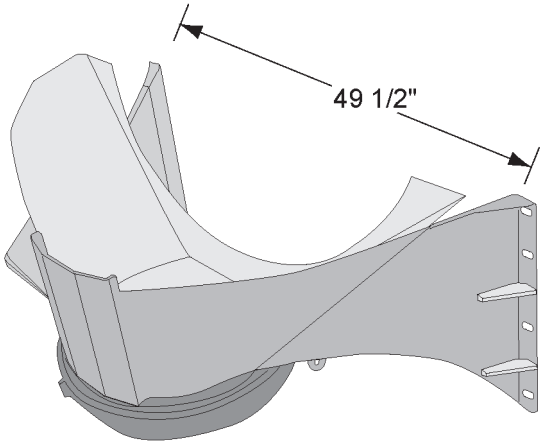

COLLECTOR - PAVER, 22" HINGE MOUNT

0014037 MTM 5040900 CCB

LONDON

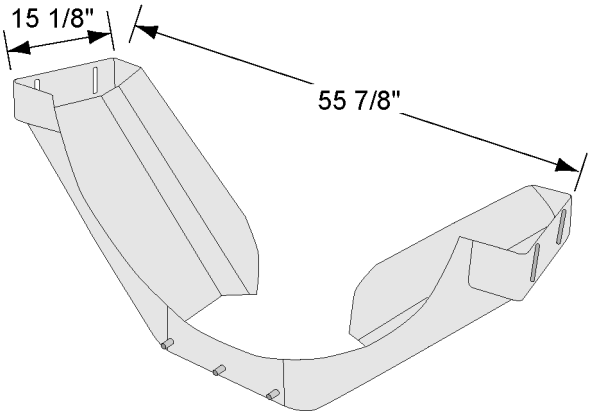

COLLECTOR - DISCHARGE HOPPER, STANDARD

1110283 MTM MC-33359 LONDON

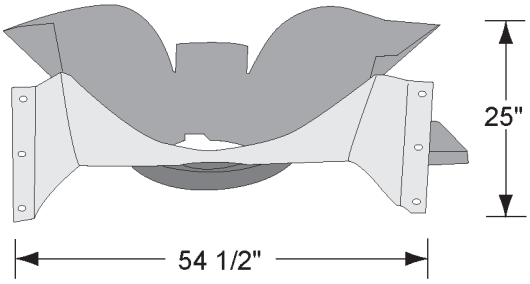

COLL -CCB, 54 1/2"

0014544 MTM 5042029 CCB

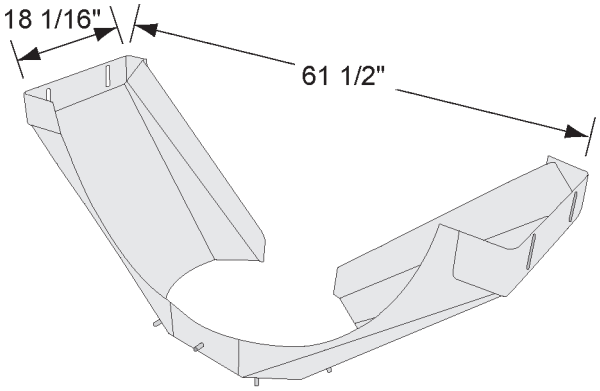

COLLECTOR - DISCHARGE HOPPER, PAVER

1255877 MTM MC-39314 LONDON

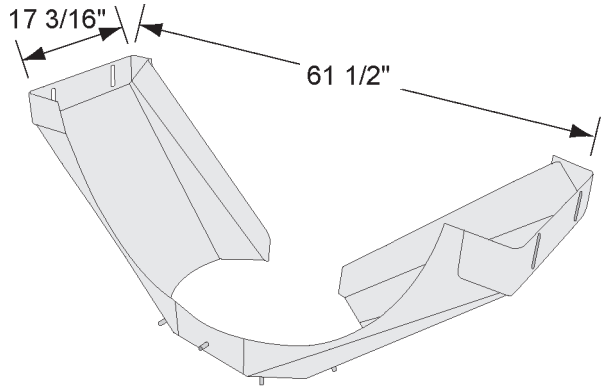

COLLECTOR - DISCHARGE HOPPER, BOOSTER 2010

1327460 MTM MC-40590 LONDON

MTM

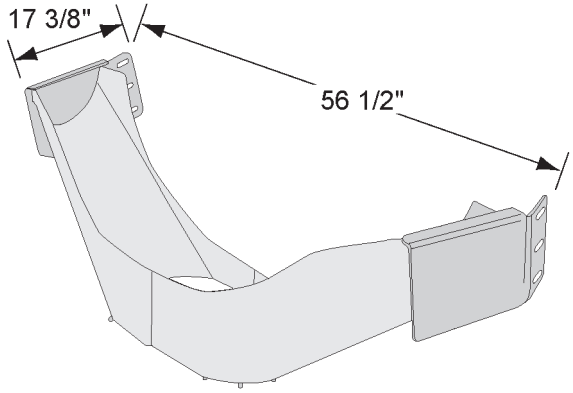

COLLECTOR - CHUTE, STANDARD

0153330 MTM

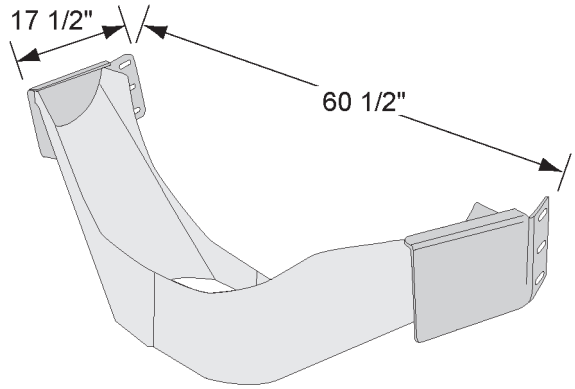

COLLECTOR - CHUTE

0153535 MTM

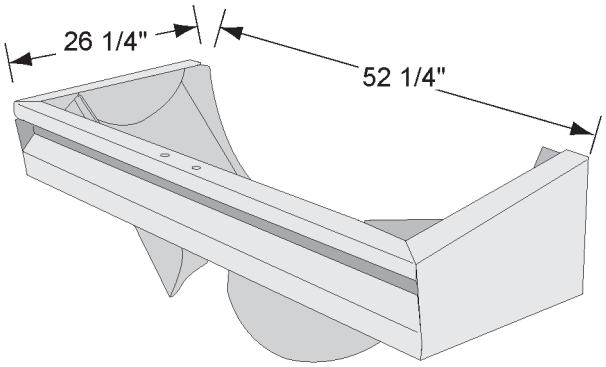

COLLECTOR - CHUTE

0150330 MTM

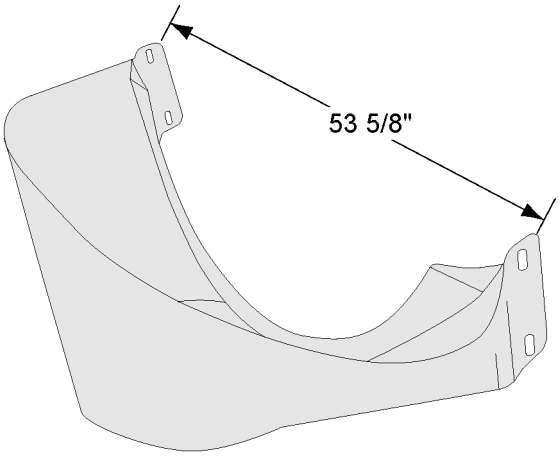

COLLECTOR - CHUTE

0182340 MTM

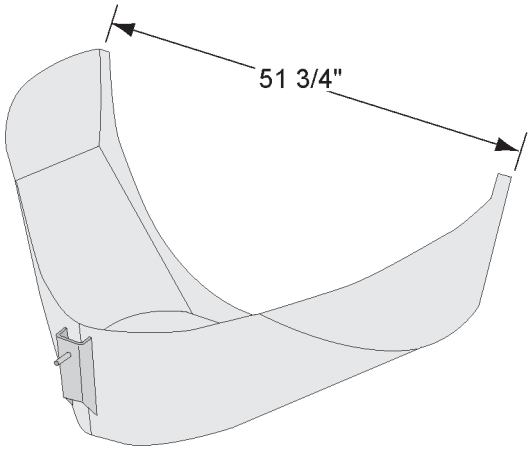

COLLECTOR - STANDARD

0085260 MTM

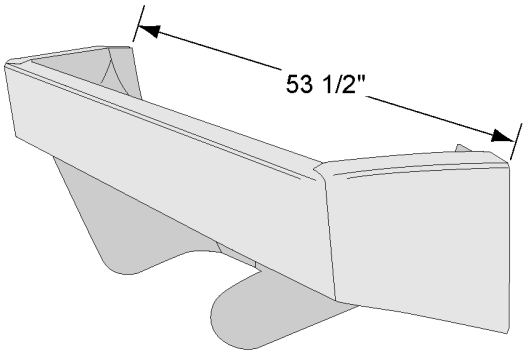

COLLECTOR - CHUTE

0082080 MTM

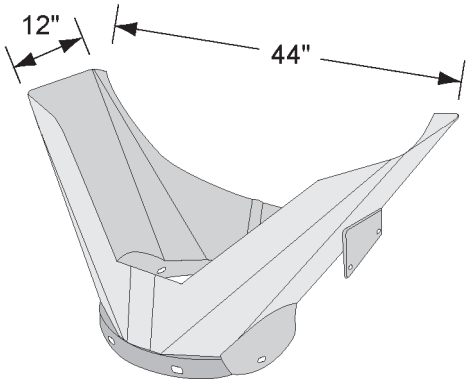

REX COL RHM

1113100 MTM 502-09290-80 REX

REX

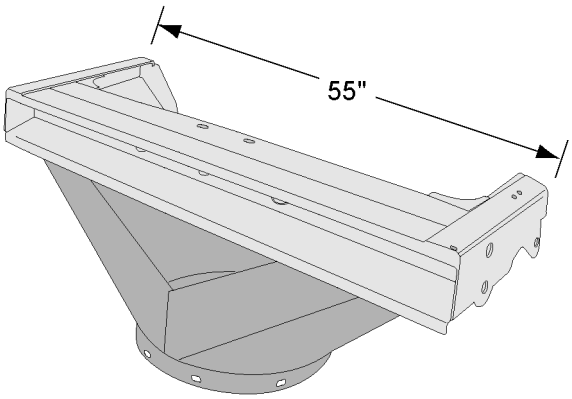

COLLECTOR - STANDARD

1112634 MTM 502-06637-83 REX

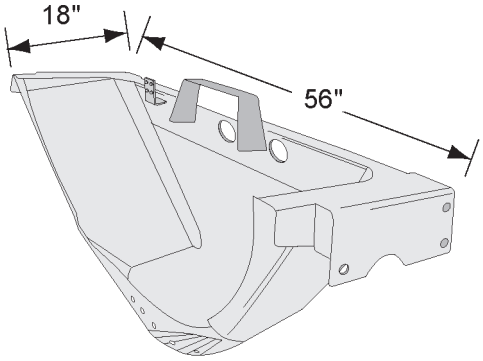

COLLECTOR - MARK II

1112747 MTM 502-09518-80 REX

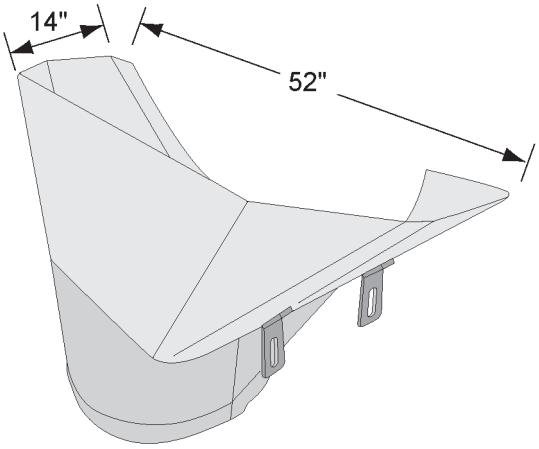

REX - RL/RLL

1111759 MTM 502-06593-80 REX

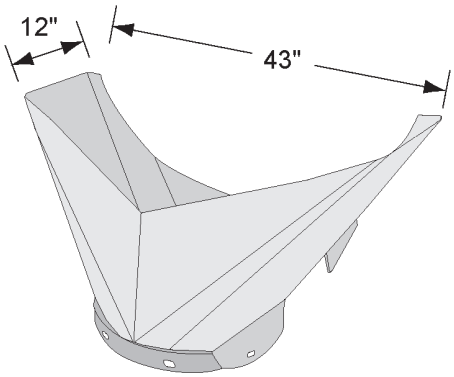

COLLECTOR - BHM

1113012 MTM 543-20047-80 REX

SCHWING

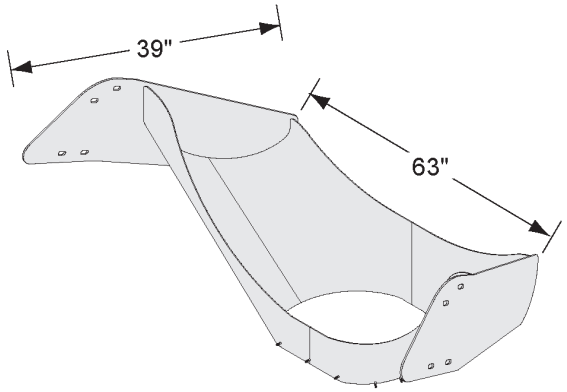

COLLECTOR - CHUTE

1327133 MTM 60306640 SCHWING

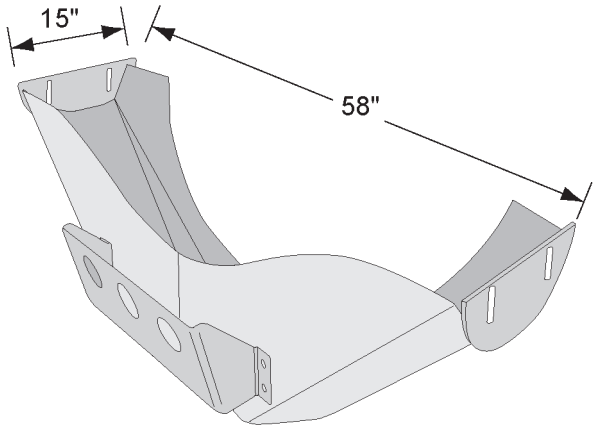

COLLECTOR - CHUTE

1110284 MTM 33360-000 SMITH

SMITH

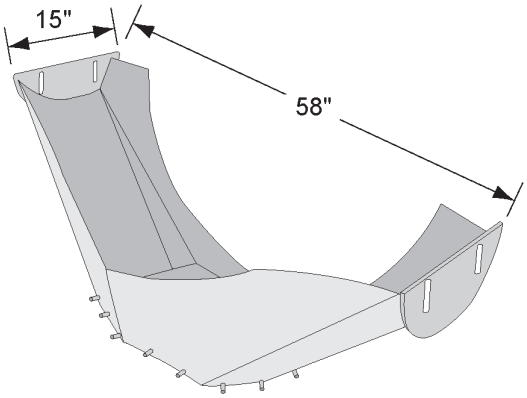

COLLECTOR - POINTED

1110285 MTM 43940010 SMITH

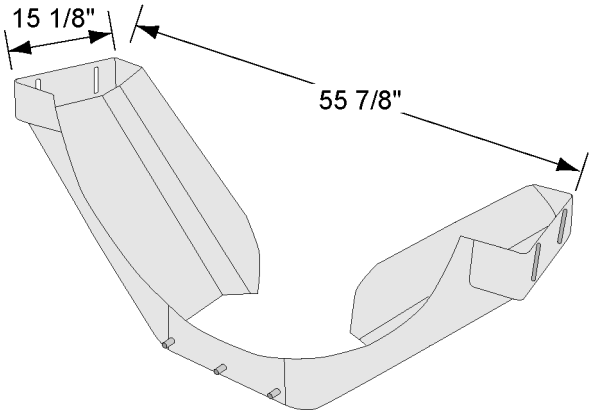

COLLECTOR - CHUTE

1110283 MTM 33359-000 SMITH

THIS PAGE INTENTIONALLY LEFT BLANK

THIS PAGE INTENTIONALLY LEFT BLANK

Fenders

ADVANCE / TEREX

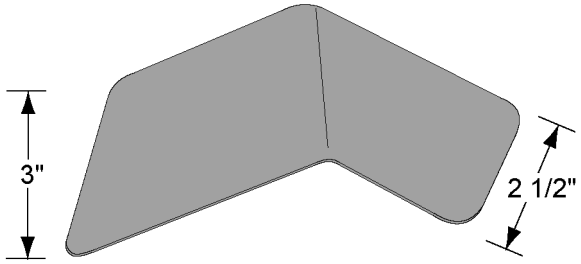

GUSSET - FENDER

1137266 MTM 20371 ADV

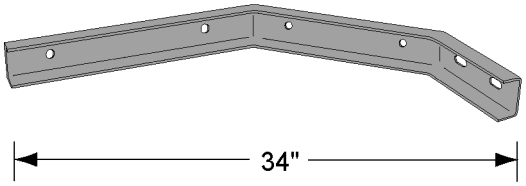

BRACE - CHANNEL, REAR FENDER

1137601 MTM 11292 ADV

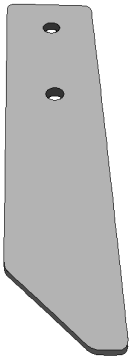

PLATE - REAR FENDER SUPPORT

1146230 MTM 11295 ADV

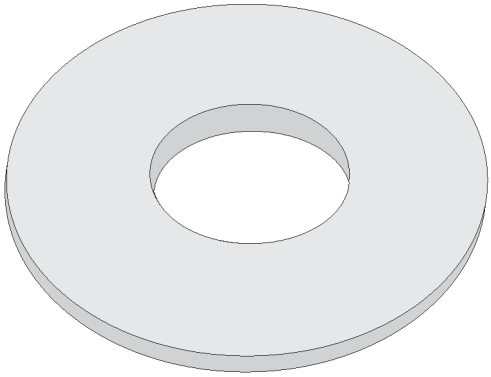

WASHER - PVC, REAR FENDER

1143287 MTM 19308 ADV

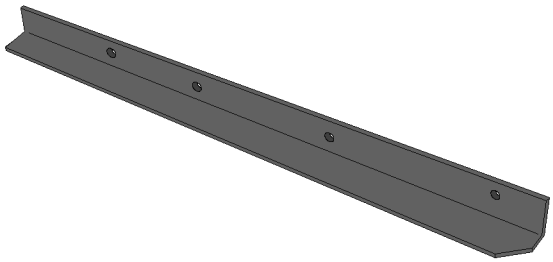

ANGLE - FRONT/REAR FENDER SUPPORT, LH

1146232 MTM 11316 ADV

ANGLE - FRONT/REAR FENDER SUPPORT, RH

1146233 MTM 11317 ADV

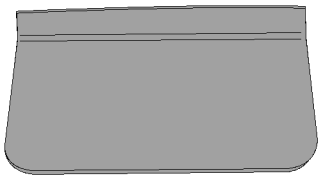

MUDFLAP (WITH BEND)

1143736 MTM 11305 ADV

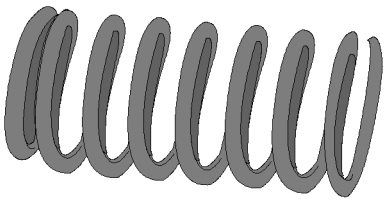

SPRING - FENDER, AIR TANK, FOOT LEVER

1142706 MTM 14437 ADV

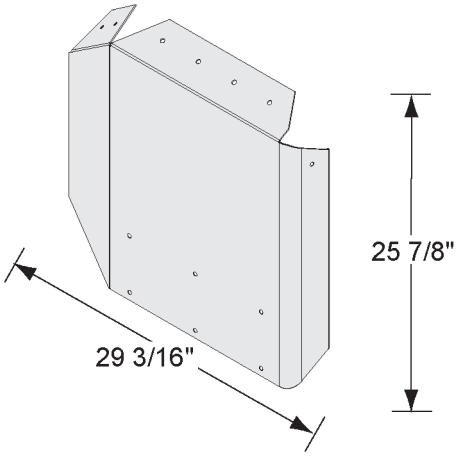

CAP - END, FRONT FENDER, ALUMINUM, LH

1329114 MTM 23494 TEREX

CAP - END, FRONT FENDER, ALUMINUM, RH

1329113 MTM 23495 TEREX

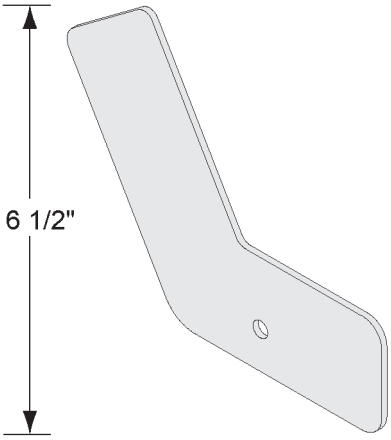

GUSSET - FENDER, REAR CORNER, ALUM

1329109 MTM 23820 TEREX

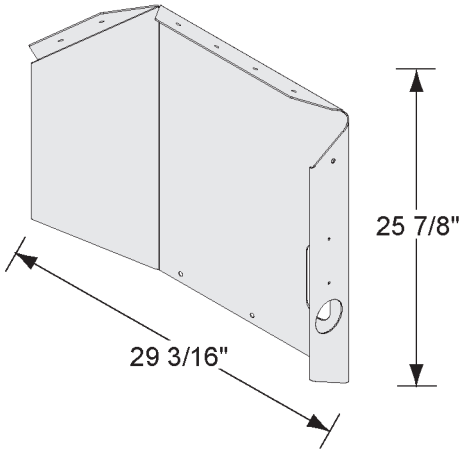

CAP - END, REAR FENDER, ALUMINUM, LH

1329116 MTM 23495 TEREX

CAP - END, REAR FENDER, ALUMINUM, RH

1329112 MTM 23494 TEREX

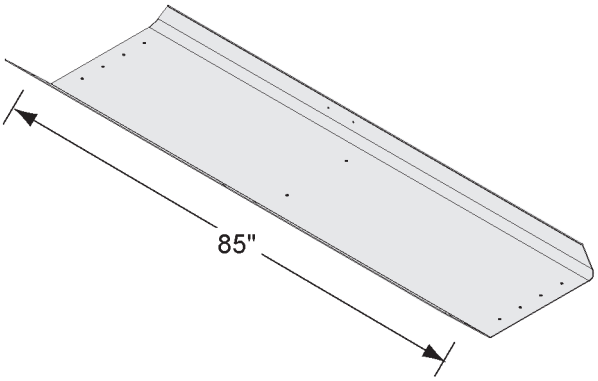

EXTENSION - FENDER, ALUMINUM, LH

1329121 MTM 23617 TEREX

EXTENSION - FENDER, ALUMINUM, RH

1329120 MTM 23617 TEREX

CBMW

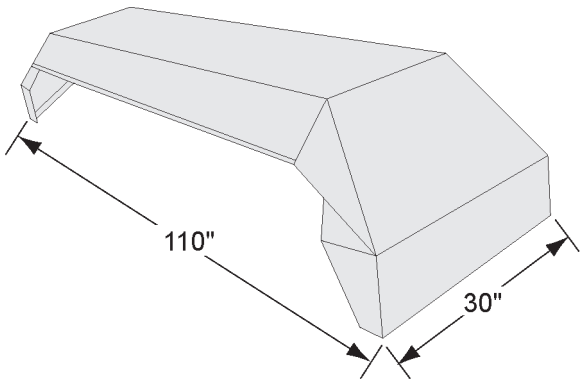

FENDER - LOAD STAR, LH

1372879 MTM 90640687 CBMW

FENDER - LOAD STAR, RH

1372880 MTM 90640688 CBMW

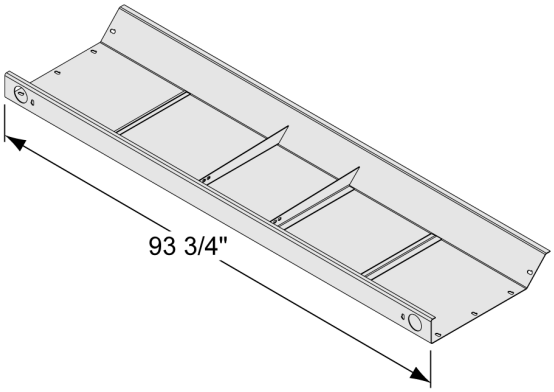

FENDER - STL, FLT TOP, UNIV, 110”

1372878 MTM 90648100 CBMW

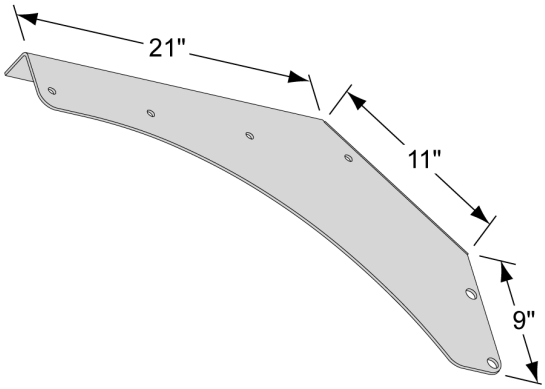

SUPPORT - FENDER, UNIV LH

1373355 MTM 90648005 CBMW

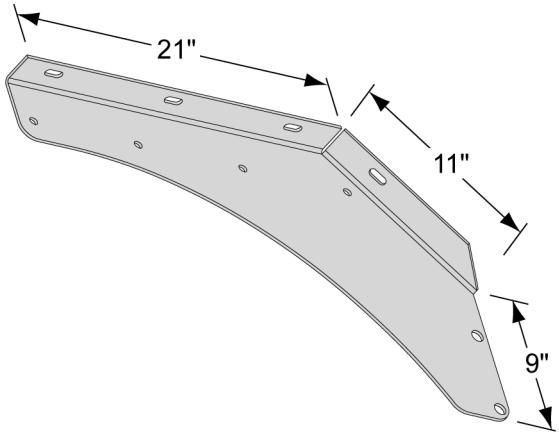

SUPPORT - FENDER, UNIV RH

1373356 MTM 90648006 CBMW

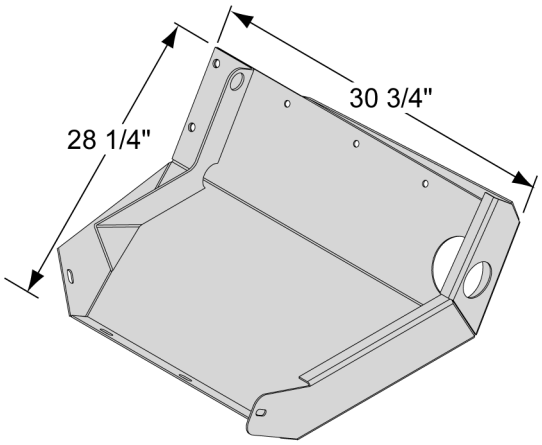

FENDER - DOVETAIL, RH UNIV STL

1373256 MTM 90648004 CBMW

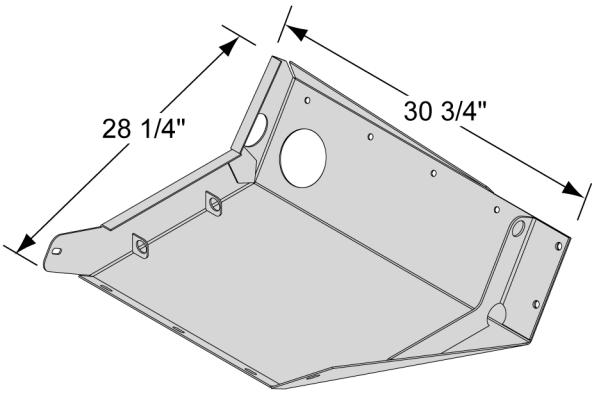

FENDER - DOVETAIL, LH UNIV STL

1373255 MTM 90648003 CBMW

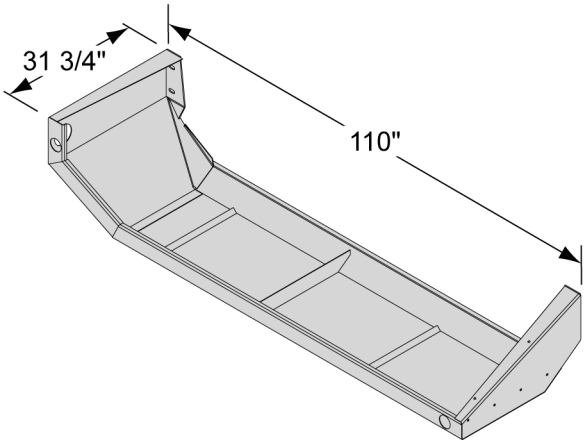

FENDER - STEEL, LH

1372879 MTM 90640687 CBMW

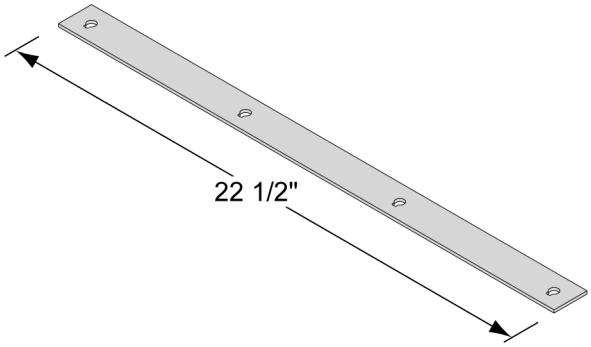

HANGER - MUDFLAP, UNIV

0082652 MTM 10610701 CBMW

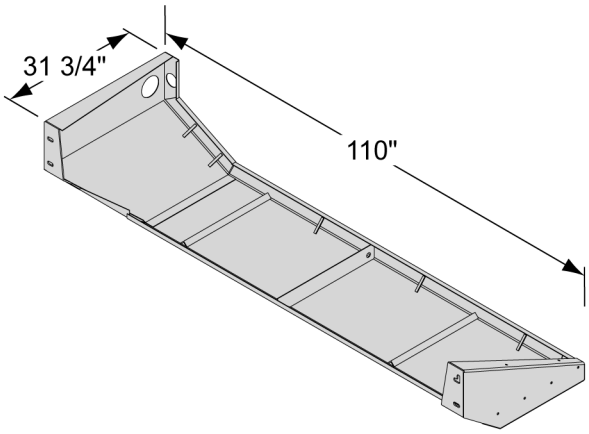

FENDER - STEEL, RH

1372880 MTM 90640688 CBMW

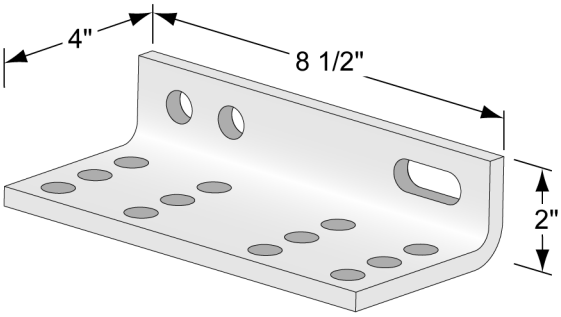

BRACKET - MTG UNIV, LH STL

1373324 MTM 90648001 CBMW

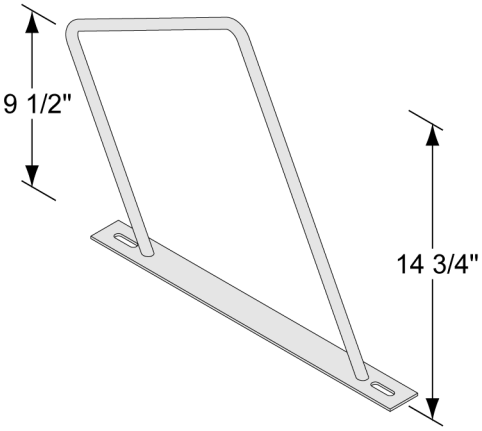

ANTI-DRIFT - MUFLAP SUPPORT, UNIV

1373403 MTM 10610121 CBMW

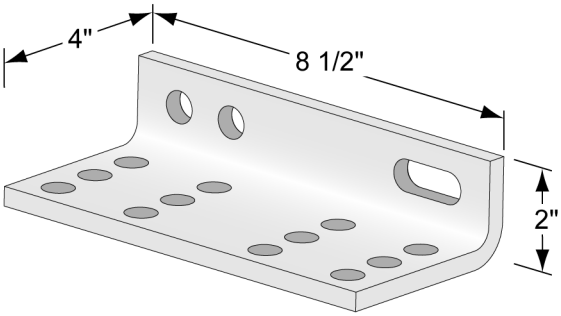

BRACKET - MTG UNIV, RH STL

1393824 MTM 90648002 CBMW

CCB

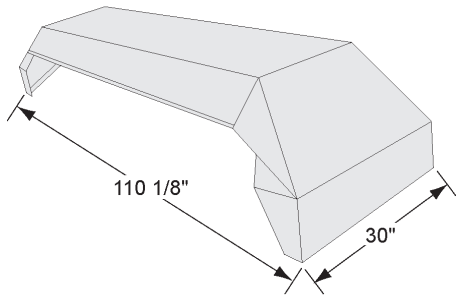

FENDER - STEEL, LH

1372879 MTM 5025763 CCB

FENDER - STEEL, RH

1372880 MTM 5025765 CCB

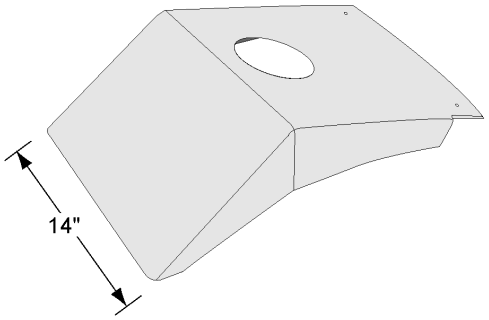

FENDER - TRAILER, 1-HOLE, LH

0012336 MTM 5026089 CCB

FENDER - TRAILER, 1-HOLE, RH

0012592 MTM 5026088 CCB

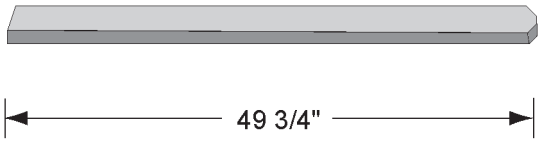

BRACKET - FENDER, BALANCE, LH

0016289 MTM 5025429 CCB

BRACKET - FENDER, BALANCE, RH

0016292 MTM 5025430 CCB

KIMBLE

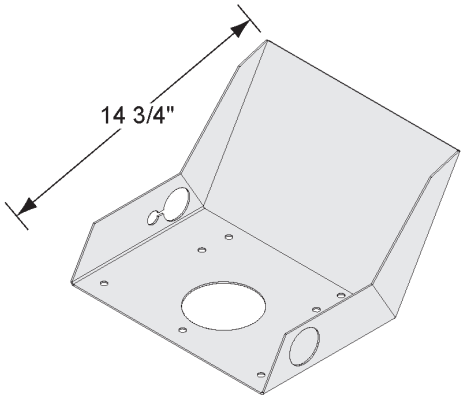

FENDER - BM, 60 DEGREE, LH

1327742 MTM S05-02080-00 KIMBLE

FENDER - BM, 60 DEGREE, RH

1327741 MTM S05-02070-00 KIMBLE

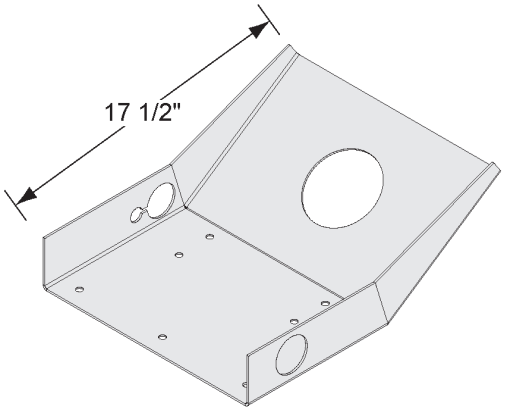

FENDER - BM, 35 DEGREE, LH

1328091 MTM S05-00110-00 KIMBLE

FENDER - BM, 35 DEGREE, RH

1328090 MTM S05-00100-00 KIMBLE

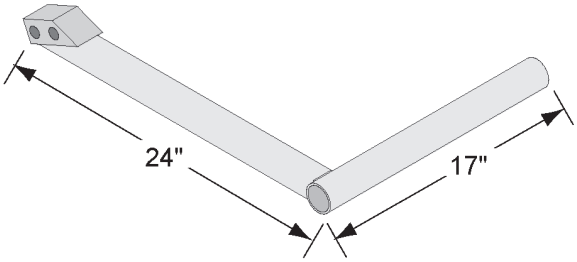

SUPPORT - FENDER, BM, LH

1327748 MTM S09-00BN0-01 KIMBLE

SUPPORT - FENDER, BM, RH

1327746 MTM S09-00BN0-02 KIMBLE

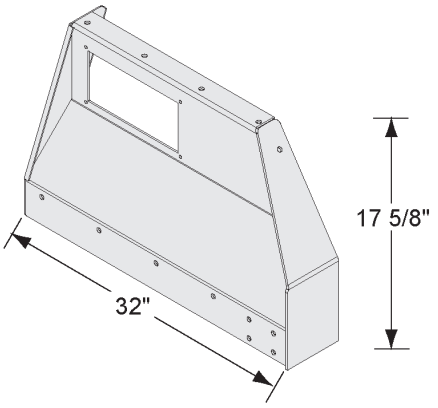

SUPPORT - FENDER, LH

1328077 MTM S05-00DN0-00 KIMBLE

SUPPORT - FENDER, RH

1328086 MTM S05-00DP0-00 KIMBLE

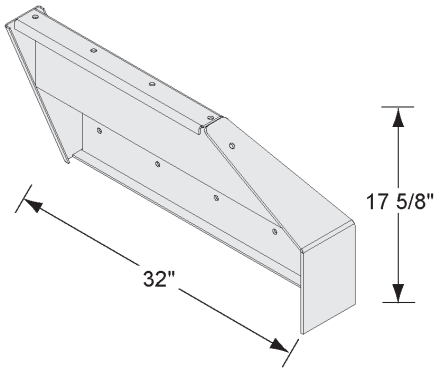

SUPPORT - FENDER, FRONT, LH

1328081 MTM S05-00DS0-00 KIMBLE

SUPPORT - FENDER, FRONT, RH

1328020 MTM S05-00DR00-00 KIMBLE

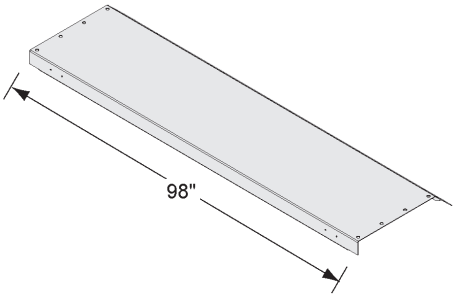

FENDER - BLANK, LH, ALUM. 35" WIDE

1328015 MTM S05-02490-00 KIMBLE

FENDER - BLANK, RH, ALUM. 35" WIDE

1328015 MTM S05-02490-00 KIMBLE

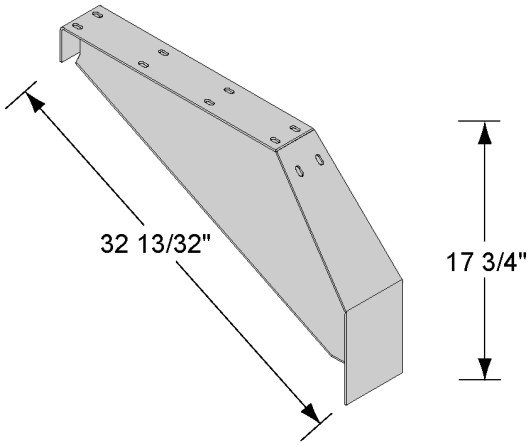

SUPPORT - FENDER, LH

1328799 MTM S05-00DT0-00 KIMBLE

SUPPORT - FENDER, RH

1328777 MTM S05-00DU0-00 KIMBLE

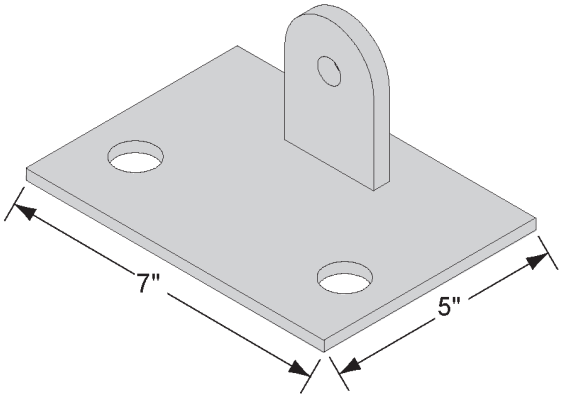

SUPPORT - FENDER

1329026 MTM WS03 KIMBLE

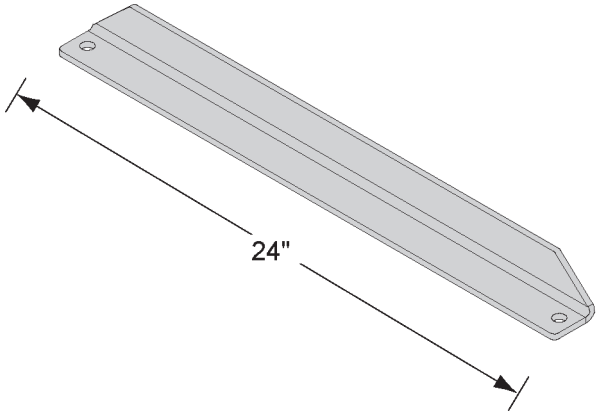

SUPPORT - FENDER, UNIVERSAL MOUNT

1329280 MTM S05-01890-00 KIMBLE

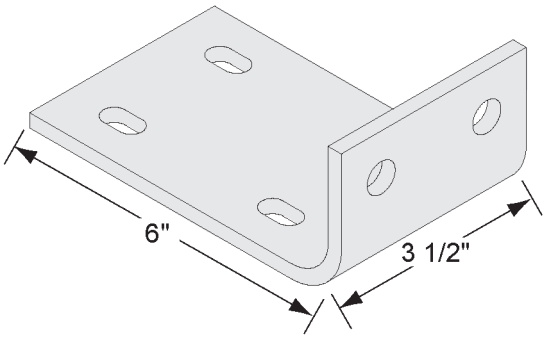

BRACE - FENDER, REAR

1329314 MTM S05-01960-00 KIMBLE

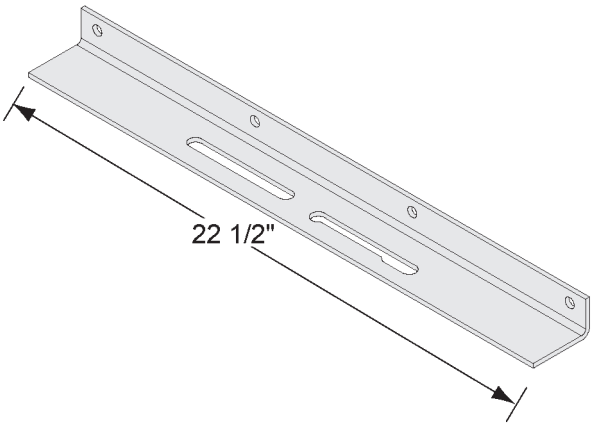

BRACKET - CENTER

1329279 MTM S05-00970-00 KIMBLE

LONDON

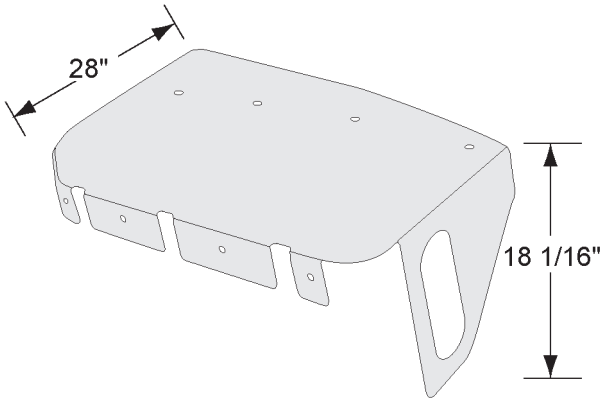

SUPPORT - FENDER, FRONT, LH

1255858 MTM MC-38969-02 LONDON

SUPPORT - FENDER, FRONT, RH

1255843 MTM MC-38969-01 LONDON

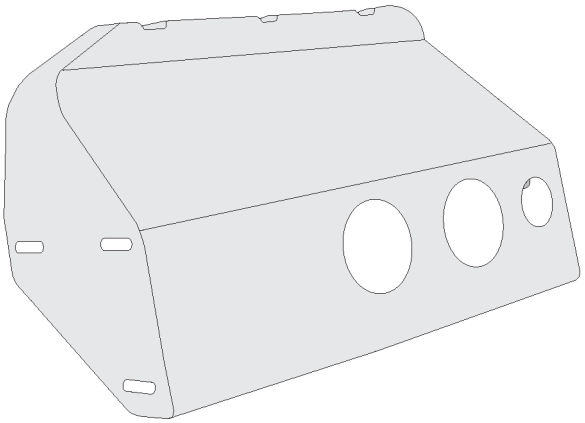

SUPPORT - FENDER, REAR, LH

1255872 MTM MC-38972-02 LONDON

SUPPORT - FENDER, REAR, RH

1255871 MTM MC-38972-01 LONDON

MTM

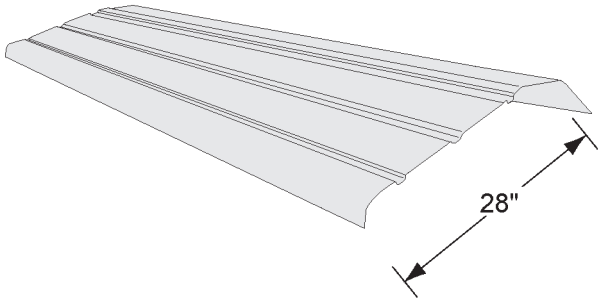

FENDER - W/INNER SPLASH, STEEL, 125”
NPN MTM MA-38965-01 LONDON

FENDER - W/INNER SPLASH, STEEL, 117”
NPN MTM MA-38965-02 LONDON

FENDER - W/INNER SPLASH, STEEL, 107”
1430244 MTM MA-38965-03 LONDON

FENDER - W/INNER SPLASH, STEEL, 98”
1321563 MTM MA-38965-04 LONDON

FENDER - W/INNER SPLASH, STEEL, 153”
1430245 MTM MA-38965-05 LONDON

FENDER - W/INNER SPLASH, ALUMINUM, 125”
NPN MTM MA-38967-01 LONDON

FENDER - W/INNER SPLASH, ALUMINUM, 117”
NPN MTM MA-38967-02 LONDON

FENDER - W/INNER SPLASH, ALUMINUM, 107”
1430246 MTM MA-38967-03 LONDON

FENDER - W/INNER SPLASH, ALUMINUM, 98”
1430248 MTM MA-38967-04 LONDON

FENDER - W/INNER SPLASH, ALUMINUM, 153”
NPN MTM MA-38967-05 LONDON

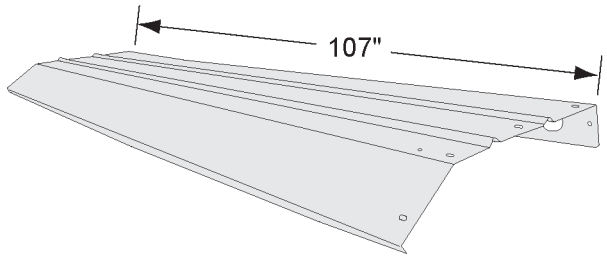

FENDER - 107” RIBBED, STEEL UNIVERSAL
0152716 MTM

FENDER - 120” RIBBED, STEEL UNIVERSAL
0152736 MTM

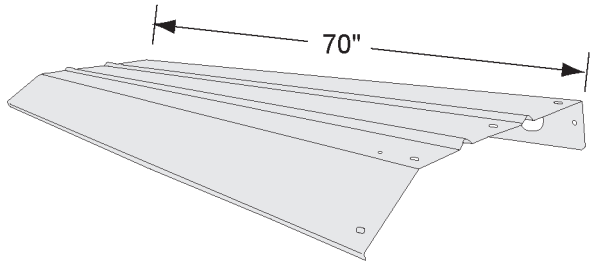

FENDER - PUSHER, LEFT, 70”
0152738 MTM

FENDER - PUSHER, RIGHT, 70”
0152838 MTM

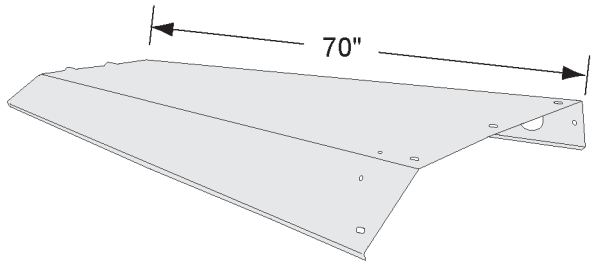

FENDER - PUSHER, LH, 70”

1147503 MTM

FENDER - PUSHER, RH, 70”

1147505 MTM

FENDER - PUSHER, LH, 96”

1147507 MTM

FENDER - PUSHER, RH, 96”

1147509 MTM

FENDER - PUSHER, LH, 107”

1147511 MTM

FENDER - PUSHER, RH, 107”

1147513 MTM

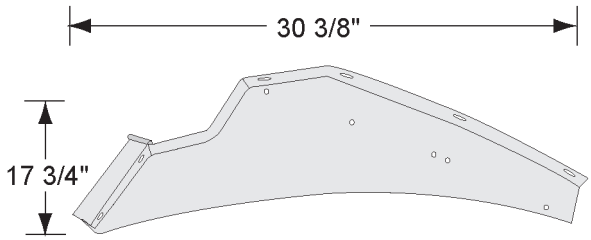

SUPPORT - FENDER, FRONT, LH

0152001 MTM

SUPPORT - FENDER, FRONT, RH

0152000 MTM

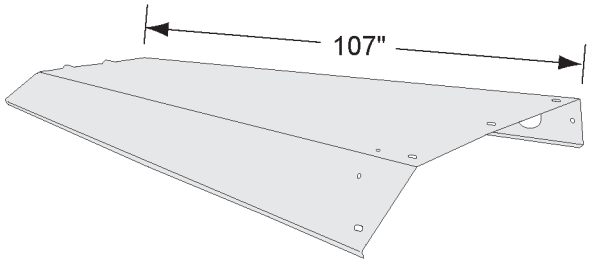

FENDER - FLAT,107”, 12 GA UNIVERSAL

0152749 MTM

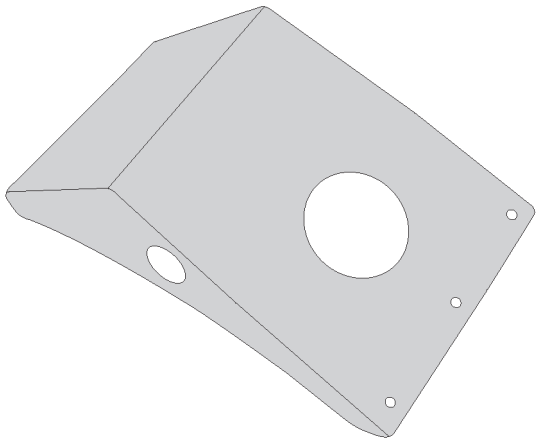

FENDER - BM II AND III, LH

0183715 MTM

FENDER - BM II AND III, RH

0183710 MTM

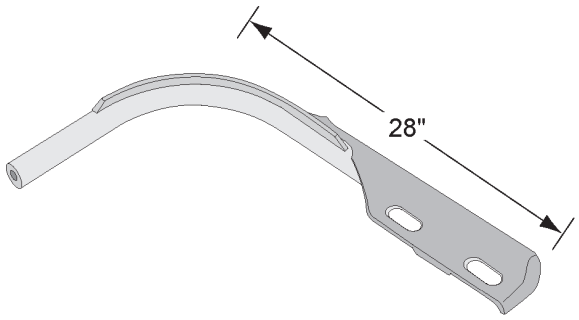

TUBE - FENDER, BM III, LH

0183718 MTM

TUBE - FENDER, BM III, RH

0183717 MTM

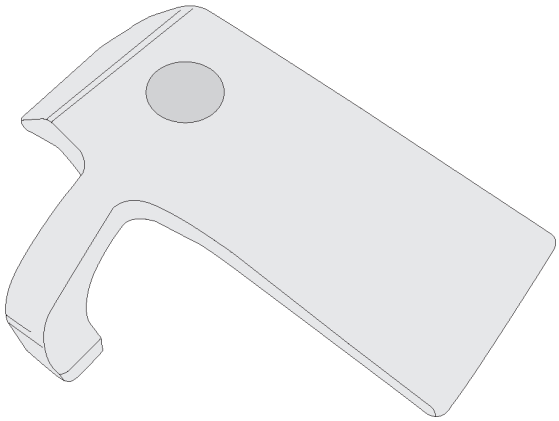

FENDER - PLASTIC, BM, LH, 96'

0183752 MTM - NLA

NOTE: Can be replaced by:

1235060 MTM	0120291 MTM
3402170 MTM	1164989 MTM
3477221 MTM	3167088 MTM

FENDER - PLASTIC, BM, RH, 96'

0183751 MTM - NLA

NOTE: Can be replaced by:

1235060 MTM	0120291 MTM
3402170 MTM	1164989 MTM
3477209 MTM	3167088 MTM

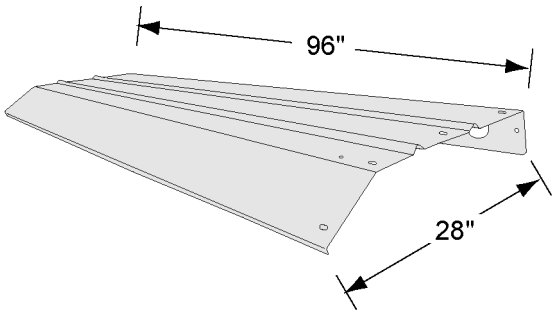

FENDER - PUSHER, LH

1147507 MTM

FENDER - PUSHER, RH

1147509 MTM

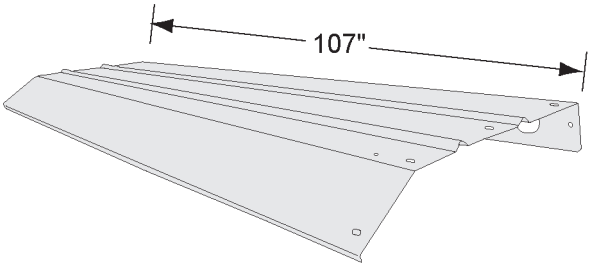

FENDER - PUSHER, LH

1147511 MTM

FENDER - PUSHER, RH

1147513 MTM

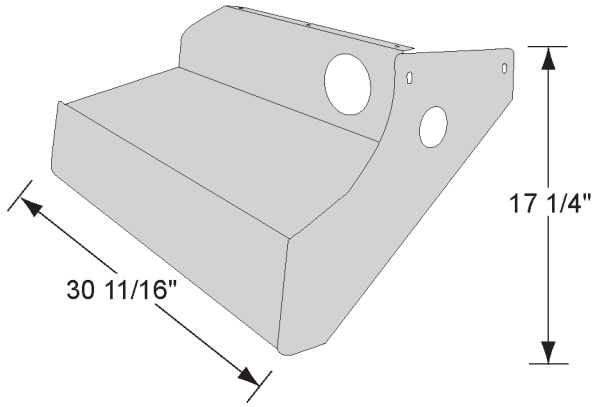

SUPPORT - FENDER, REAR, LH
0152006 MTM

SUPPORT - FENDER, REAR, RH
0152005 MTM

SUPPORT - FENDER, REAR, STEEL, 1 HOLE, RH
1485066 MTM

SUPPORT - FENDER, REAR, STEEL, 1 HOLE, LH
1485081 MTM

SUPPORT - FENDER, REAR, ALUM., 1 HOLE, RH
1545583 MTM

SUPPORT - FENDER, REAR, STEEL, 1 HOLE, LH
1485259 MTM

SUPPORT - FENDER, REAR, ALUM., 2 HOLE, RH
1485269 MTM

SUPPORT - FENDER, REAR, ALUM., 2 HOLE, LH
1485267 MTM

SUPPORT - FENDER, REAR, STEEL, 2 HOLE, RH
1485275 MTM

SUPPORT - FENDER, REAR, STEEL, 2 HOLE, LH
1545621 MTM

SUPPORT - FENDER, REAR, STEEL, 0 HOLE, RH
1545565 MTM

SUPPORT - FENDER, REAR, STEEL, 0 HOLE, LH
1545581 MTM

SUPPORT - FENDER, REAR, ALUM., 0 HOLE, RH
1545561 MTM

SUPPORT - FENDER, REAR, ALUM., 0 HOLE, LH
1545564 MTM

REX

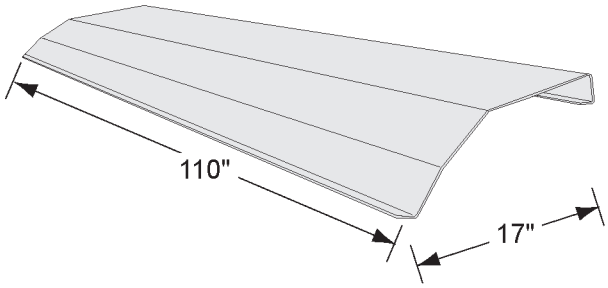

FENDER - MAIN, 3 BEND
1110708 MTM 102-50342-01 REX

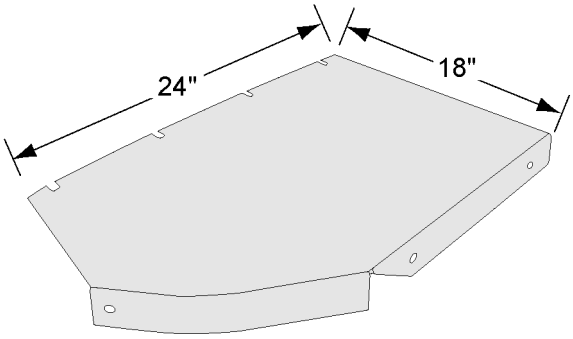

GUARD - FRONT, RH
1110214 MTM 502-20265-80 REX

GUARD - FRONT, LH
1113934 MTM 502-20265-81 REX

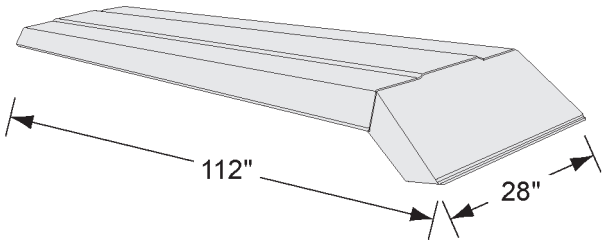

FENDER - TANDEM
1112842 MTM 502-09523-80 REX

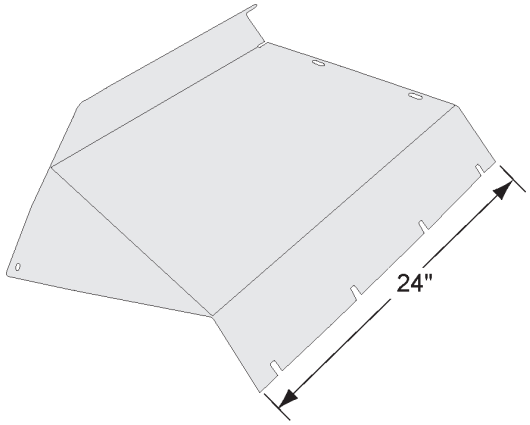

GUARD - REAR, LH

1112900 MTM 102-50175-02 REX

GUARD - REAR, RH

1112777 MTM 102-50175-01 REX

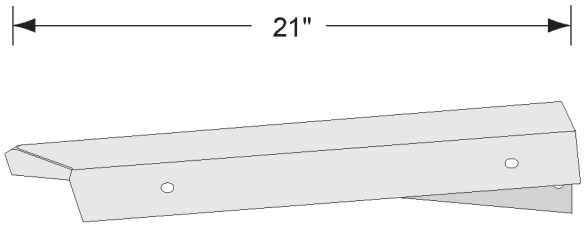

FENDER - FILLER, LH

1110095 MTM 102-30839-02 REX

FENDER - FILLER, RH

1112808 MTM 102-30839-01 REX

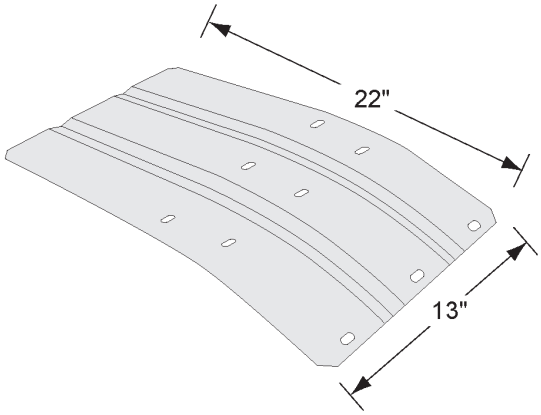

FENDER - TRAILER, LM, LH / RH

1113177 MTM 102-31474-01 REX

SCHWING

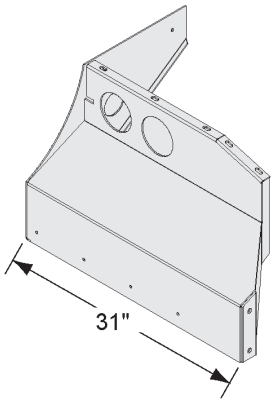

SUPPORT - FENDER, REAR, LH

1326494 MTM 30389911 SCWHING

SUPPORT - FENDER, REAR, RH

1326433 MTM 30389912 SCHWING

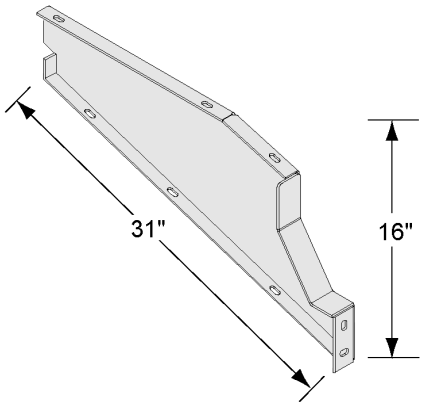

SUPPORT - FENDER, FRONT, LH

1326713 MTM 30389913 SCHWING

SUPPORT - FENDER, FRONT, RH

1326708 MTM 30389914 SCHWING

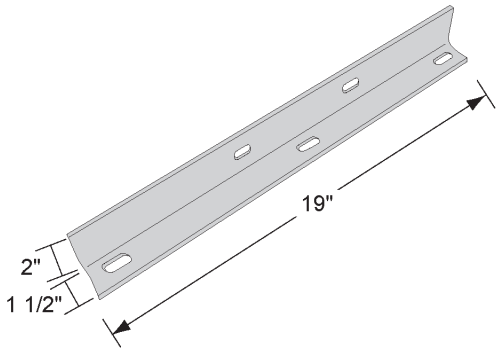

BRACE - FENDER, CENTER

0152717 MTM 30389186 SCHWING

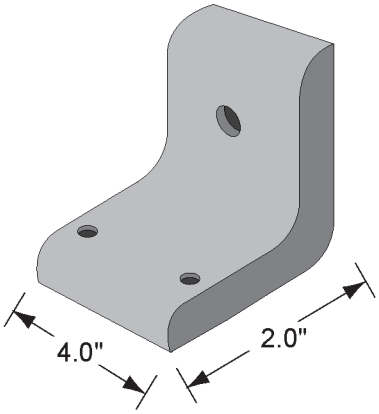

ANGLE - CENTER, UNIVERSAL, FRM M

0084007 MTM 30389188 SCHWING

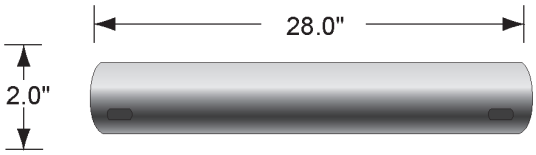

BRACE - FENDER, UNIVERSAL

0084604 MTM 30389187 SCHWING

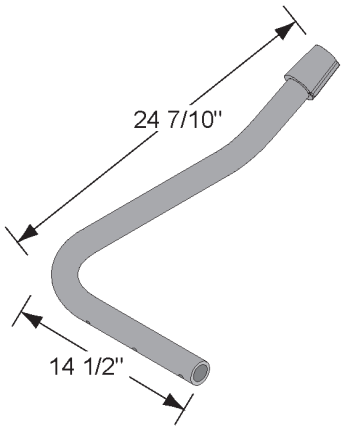

SUPPORT - BM FENDER, RH

1333571 MTM 30389884 SCHWING

SUPPORT - BM FENDER, LH

1333572 MTM 30389885 SCHWING

SMITH

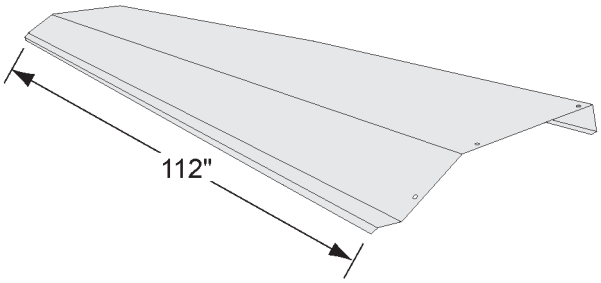

FENDER - STEEL, RH/LH

1110201 MTM 43766001 SMITH

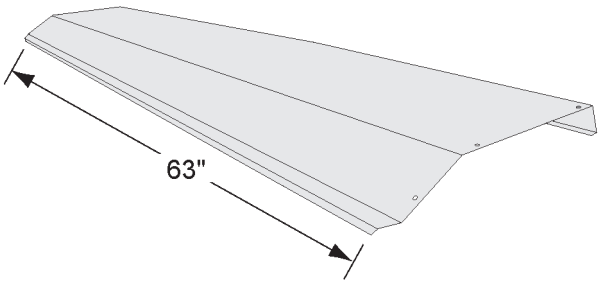

FENDER - FLAT

1113642 MTM 43766006 SMITH

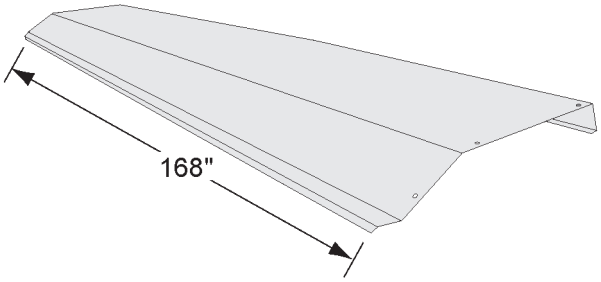

FENDER - TRIAXLE

1111500 MTM 43766067 SMITH

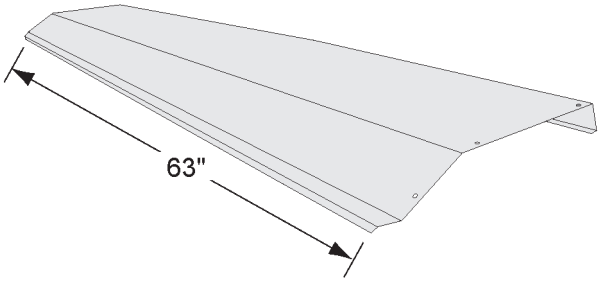

FENDER - SINGLE AXLE

1104939 MTM 43766006 SMITH

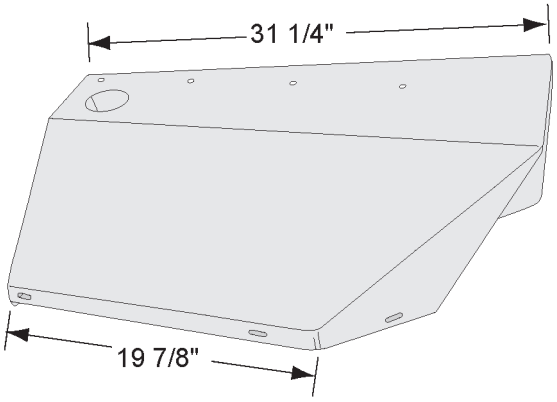

BRACKET - FENDER, REAR, RH

1110209 MTM 43767000 SMITH

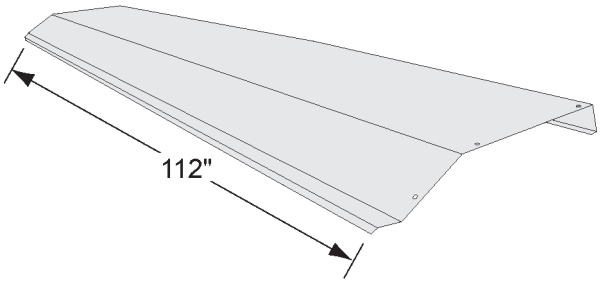

FENDER - SMOOTH, ALUMINUM

1110304 MTM 43809002 SMITH

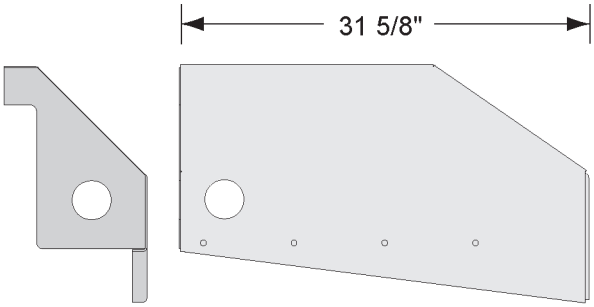

BRACKET - FENDER, REAR, LH

1110215 MTM 43767030 SMITH

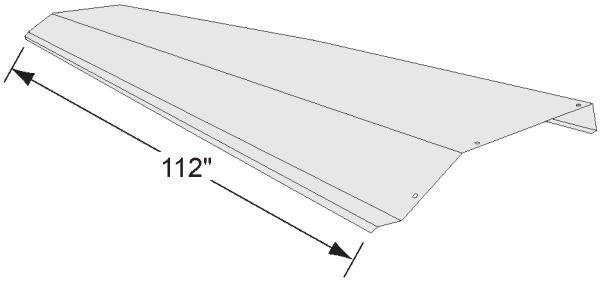

FENDER - TANDEM

1110276 MTM 43766065 SMITH

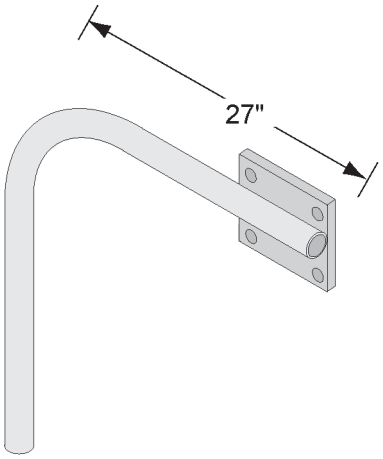

BRACKET - FENDER, RH

1110147 MTM 55000033 SMITH

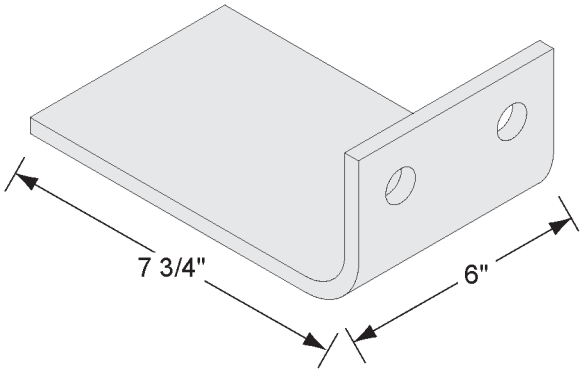

BRACKET - FENDER, CENTER

1110111 MTM 5111LNT SMITH

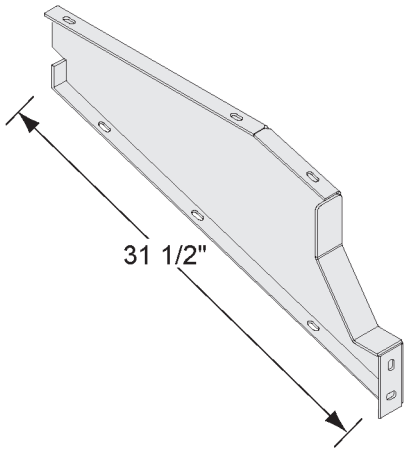

SUPPORT - FENDER, RH

1110170 MTM 43766077 SMITH

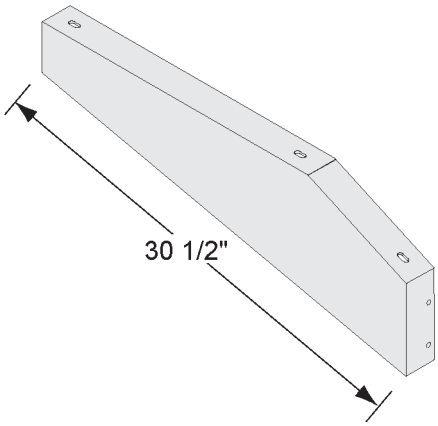

BRACKET - FENDER, CENTER, LH

1110171 MTM 43766068 SMITH

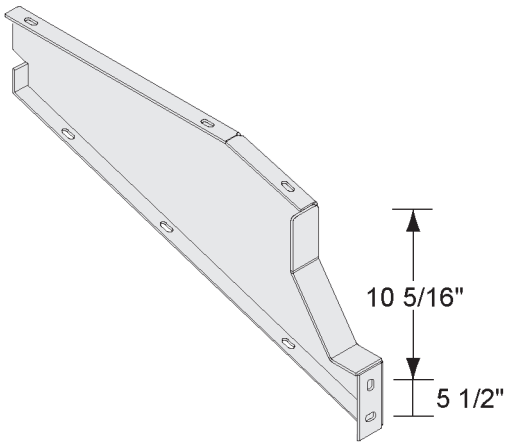

BRACKET - FENDER, FRONT, RH

1110168 MTM 43766009 SMITH

BRACKET - FENDER, FRONT, LH

1110167 MTM 43766008 SMITH

THIS PAGE INTENTIONALLY LEFT BLANK

THIS PAGE INTENTIONALLY LEFT BLANK

Tanks - Air, Hydraulic, Water

ADVANCE / TEREX

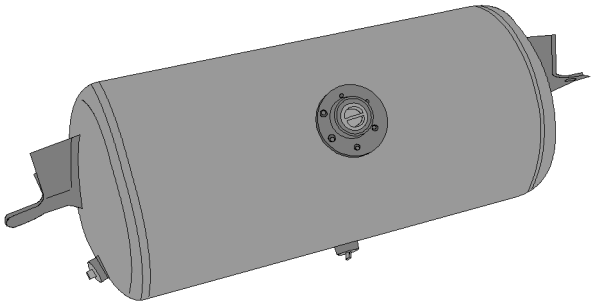

TANK - WET, AIR

1426523 MTM 14454 ADV

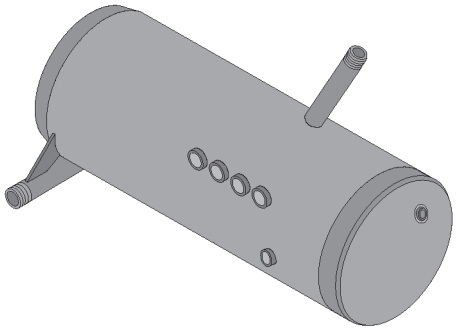

RESERVOIR - OIL

1270158 MTM 40501 TEREX

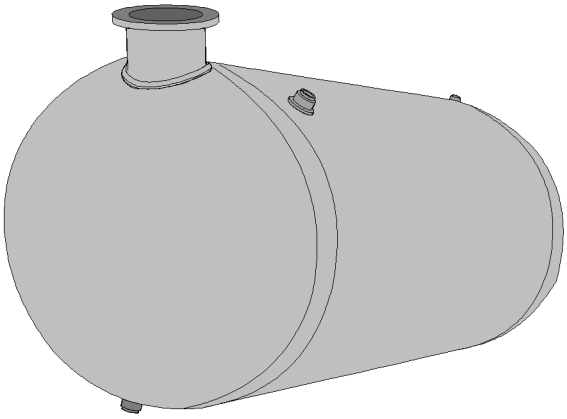

TANK - WATER, 150 GAL, STEEL

1134005 MTM 12675 TEREX

TANK - WATER, 200 GAL, STEEL

1134006 MTM 12684 TEREX

TANK - WATER, 250 GAL, STEEL

1146614 MTM 12691 TEREX

TANK - WATER, 150 GAL, ALUM

1134007 MTM 12702 TEREX

TANK - WATER, 200 GAL, ALUM

1235112 MTM 12709 TEREX

CBMW

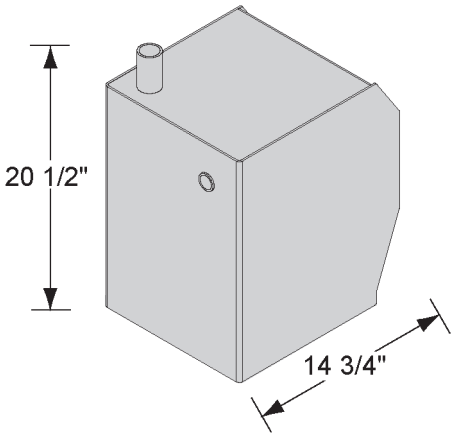

RESERVOIR - OIL

1327139 MTM 90240160 CBMW

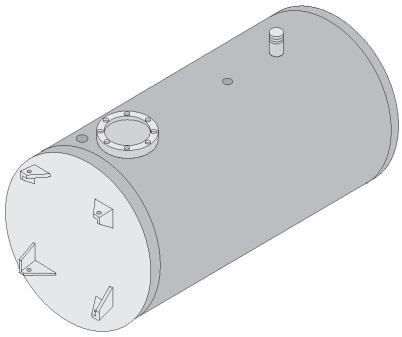

TANK - WATER, UNIVERSAL, 100 GAL, STEEL
0151765 MTM 90117100 CBMW

TANK - WATER, UNIVERSAL, 100 GAL, ALUM
0182760 MTM 90117101 CBMW

TANK - WATER, UNIVERSAL, 125 GAL, STEEL
0151770 MTM 90117125 CBMW

TANK - WATER, UNIVERSAL, 125 GAL, ALUM
1527807 MTM 90117126 CBMW

TANK - WATER, UNIVERSAL, 150 GAL, STEEL
0151775 MTM 90117150 CBMW

TANK - WATER, UNIVERSAL, 150 GAL, ALUM
1527810 MTM 90117151 CBMW

CCB

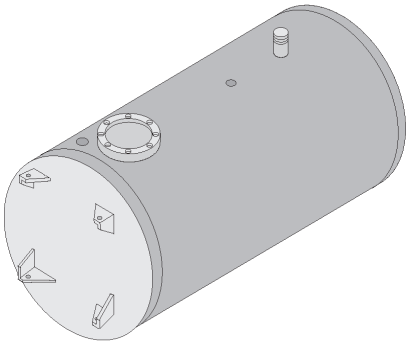

TANK - WATER, SIDE/XMT, 100 GAL
0012149 MTM 5054794 CCB

TANK - WATER, SIDE/XMT, 150 GAL
0012418 MTM 5054804 CCB

TANK - WATER, SIDE/XMT, 125 GAL
0012237 MTM 5054795 CCB

TANK - WATER, SIDE/XMT, 90 GAL
0012627 MTM 5054793 CCB

LONDON

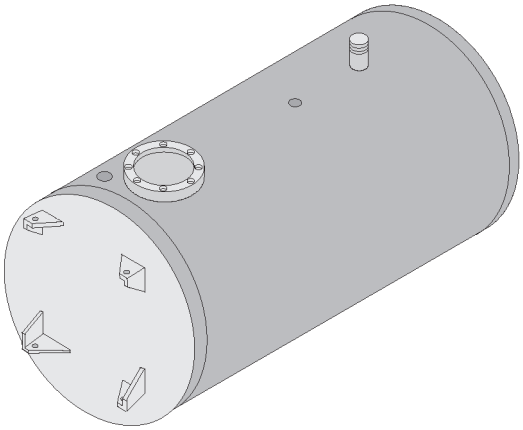

TANK - WATER, 90 GAL, ALUM, 24" DIA
1330115 MTM MC-38226-01 LONDON

TANK - WATER, 100 GAL, ALUM, 24"DIA
1330116 MTM MC-38226-02 LONDON

TANK - WATER, 125 GAL, ALUM, 24" DIA
1255817 MTM MC-38226-03 LONDON

TANK - WATER, 90 GAL, STEEL, 24" DIA
1330118 MTM MD-39043-04 LONDON

TANK - WATER, 100 GAL, STEEL, 24" DIA
1330120 MTM MD-39043-03 LONDON

TANK - WATER, 125 GAL, STEEL, 24" DIA
1330121 MTM MD-39043-02 LONDON

TANK - WATER, 150 GAL, STEEL, 24" DIA
1326075 MTM MD-39043-01 LONDON

TANK - WATER, 100 GAL, STEEL, 30" DIA
1330124 MTM MD-35696-04 LONDON

TANK - WATER, 125 GAL, STEEL, 30" DIA
1256031 MTM MD-35696-03 LONDON

TANK - WATER, 150 GAL, STEEL, 30" DIA
1256030 MTM MD-35696-02 LONDON

TANK - WATER, 200 GAL, STEEL, 30" DIA
1256029 MTM MD-35696-01 LONDON

TANK - WATER, 145/35 GAL, STEEL, 30" DIA
1330126 MTM MD-37051-02 LONDON

TANK - WATER, 165/35 GAL, STEEL, 30" DIA
1330127 MTM MD-37051-01 LONDON

MTM

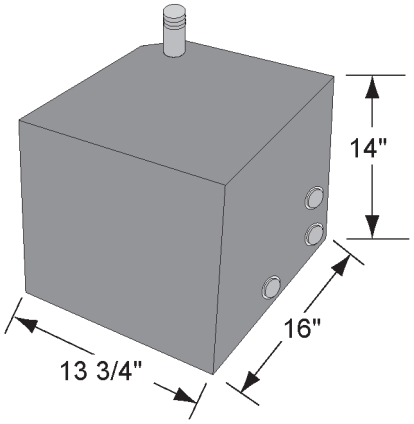

RESERVOIR - OIL, SQUARE, W/O BKTS
0150360 MTM

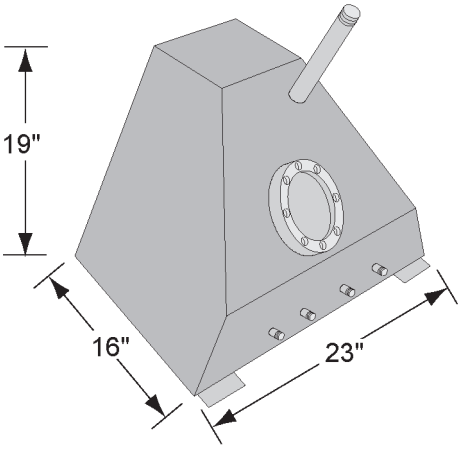

RESERVOIR - OIL
0150860 MTM

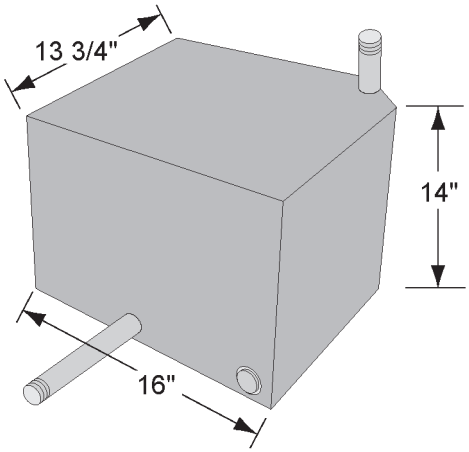

RESERVOIR - OIL, SQUARE, NOTCH CORNER
0150880 MTM

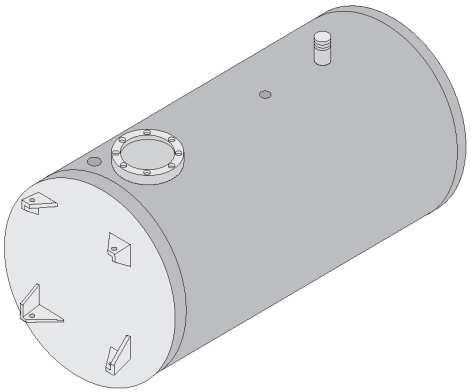

TANK - WATER, UNIVERSAL, 90 GAL, STEEL
0151763 MTM

TANK - WATER, UNIVERSAL, 100 GAL, STEEL
0151765 MTM

TANK - WATER, UNIVERSAL, 125 GAL, STEEL
0151770 MTM

TANK - WATER, UNIVERSAL, 150 GAL, STEEL
0151775 MTM

TANK - WATER, UNIVERSAL, 200 GAL, STEEL
0152927 MTM

TANK - WATER, UNIVERSAL, 90 GAL, ALUM
0182750 MTM

TANK - WATER, UNIVERSAL, 100 GAL, ALUM
0182760 MTM

TANK - WATER, UNIVERSAL, 125 GAL, ALUM
0182770 MTM

TANK - WATER, UNIVERSAL, 150 GAL, ALUM
1527810 MTM

TANK - WATER, UNIVERSAL, 65 GAL, ALUM
0182720 MTM

TANK - WATER, UNIVERSAL, 200 GAL, ALUM
0153927 MTM

TANK - WATER, UNIVERSAL, 15/75 GAL, ALUM
1100948 MTM

TANK - WATER, UNIVERSAL, 15/85 GAL, ALUM
0153865 MTM

TANK - WATER, UNIVERSAL, 15/110 GAL, ALUM
0153840 MTM

TANK - WATER, UNIVERSAL, 15/135 GAL, ALUM
1527819 MTM

TANK - WATER, 15/75 GAL, STEEL
1527843 MTM

TANK - WATER, 15/85 GAL, STEEL
1527845 MTM

TANK - WATER, 15/100 GAL, STEEL
1527846 MTM

TANK - WATER, 15/135 GAL, STEEL
1527849 MTM

TANK - WATER, 15/150 GAL, ALUM
1527822 MTM

TANK - WATER, 15/150 GAL STEEL
1527852 MTM

TANK - WATER, 225 GAL STEEL
1527859 MTM

TANK - WATER, 225 GAL ALUM
1527881 MTM

TANK - WATER, 15/90 GAL ALUM
1527825 MTM

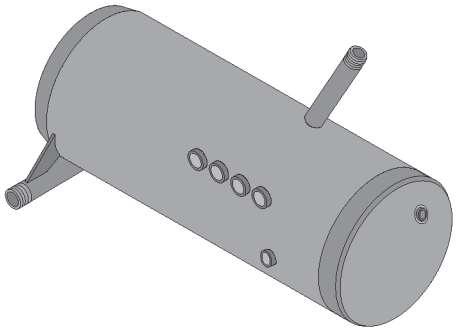

RESERVOIR - OIL, STEEL, STD MIXER
1270158 MTM

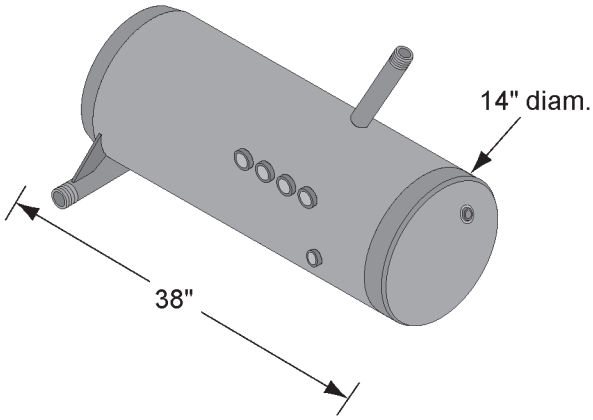

RESERVOIR - OIL, STEEL, BM
1270164 MTM

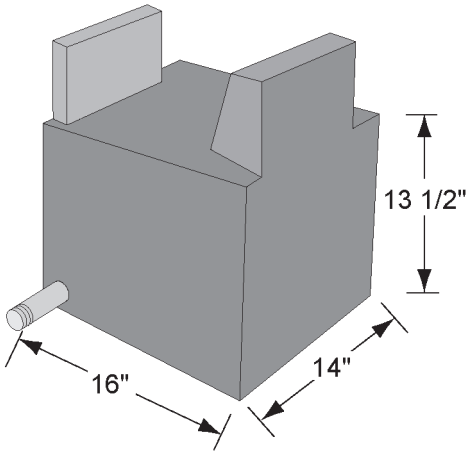

RESERVOIR - OIL, SQUARE, W/O BKTS
0150365 MTM

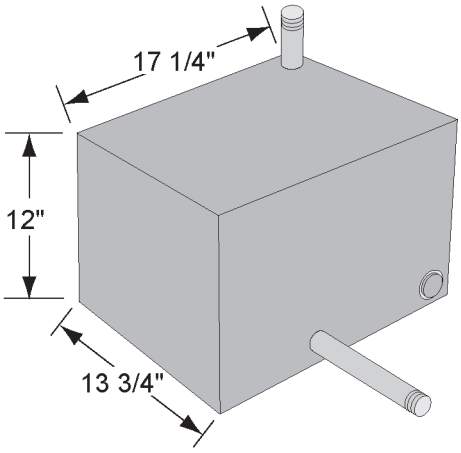

RESERVOIR - OIL, QUARE, 2-PIPE
0150870 MTM

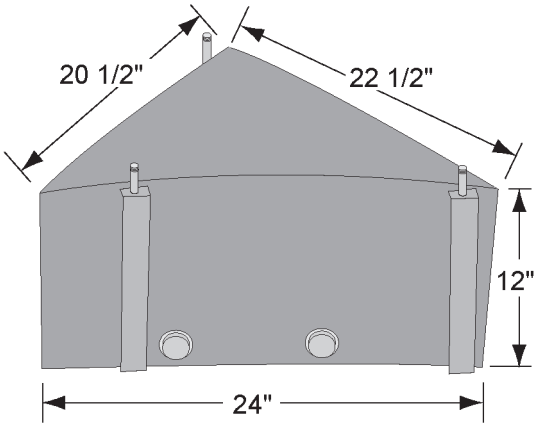

RESERVOIR - OIL, TRIANGLE

0151850 MTM

REX

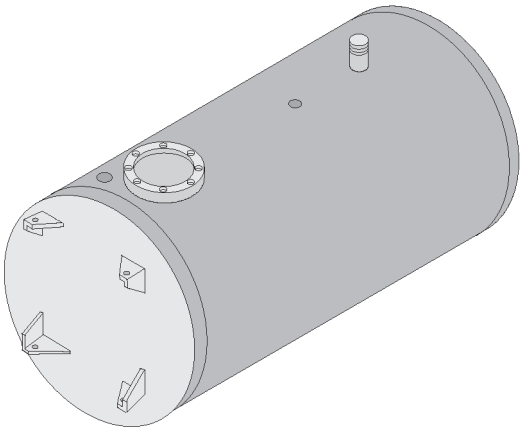

TANK - WATER, 100 GAL, 26" DIA

1114634 MTM 502-9205-81 REX

TANK - WATER, 150 GAL, 26" DIA

1114638 MTM 502-9205-83 REX

TANK - WATER, 300 GAL, 36" DIA

1114641 MTM 502-9207-80 REX

TANK - WATER, 385 GAL, 36" DIA

1114644 MTM 502-9207-81 REX

TANK - WATER, 75 GAL STEEL, 26" DIA

1113931 MTM 502-9205-80 REX

TANK - WATER, 90 GAL STEEL, 26" DIA

1113910 MTM 502-9205-81 REX

TANK - WATER, 200 GAL STEEL, 30" DIA

1114685 MTM 502-9206-80 REX

TANK - WATER, 250 GAL, 30" DIA

1114649 MTM 502-9206-81 REX

TANK - WATER, 200 GAL

1114515 MTM 502-9433-81 REX

TANK - WATER, 150 GAL

1114514 MTM 502-9433-80 REX

SCHWING

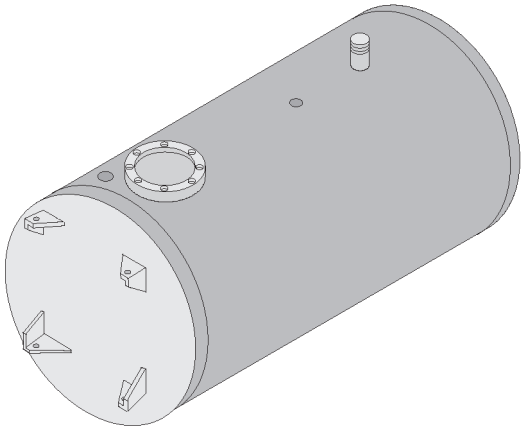

TANK - WATER, UNIVERSAL, 90 GAL, ALUM

0182750 MTM 30389493 SCHWING

TANK - WATER, UNIVERSAL, 100 GAL, ALUM

0182760 MTM 30389031 SCHWING

TANK - WATER, UNIVERSAL, 100 GAL, STEEL

0151765 MTM 30389033 SCHWING

TANK - WATER, UNIVERSAL, 125 GAL, STEEL

0151770 MTM 30340147 SCHWING

TANK - WATER, UNIVERSAL, 125 GAL, ALUM

1527807 MTM 30389034 SCHWING

TANK - WATER, UNIVERSAL, 150 GAL, STEEL

0151775 MTM 30389437 SCHWING

TANK - WATER, UNIVERSAL, 150 GAL, ALUM

1527810 MTM 30389498 SCHWING

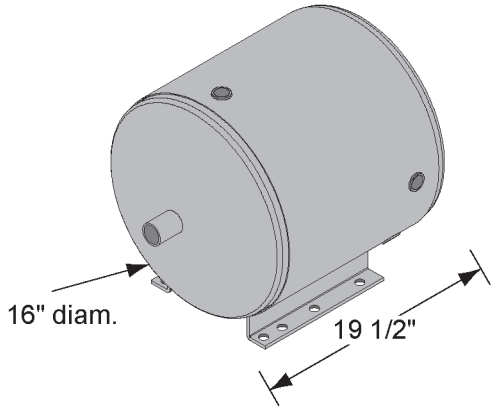

RESERVOIR - OIL, 12 GAL

1334501 MTM 389278 SCHWING

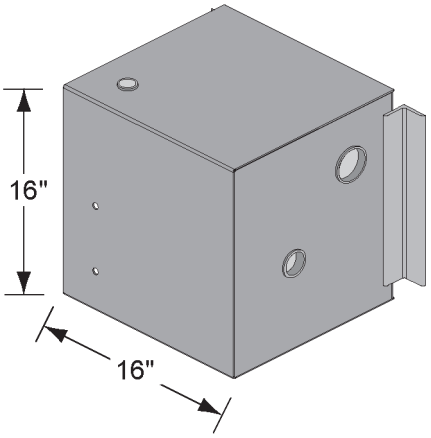

RESERVOIR - OIL, 15 GAL

1334800 MTM 30389477 SCHWING

SMITH

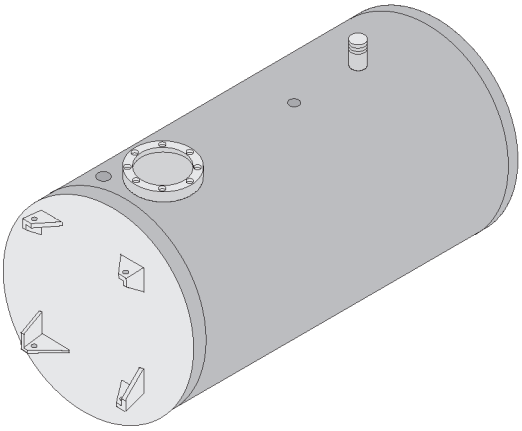

TANK - WATER, 90 GAL, STEEL

0151763 MTM 43668019 SMITH

TANK - WATER, 90 GAL, ALUM

1527801 MTM 43666008 SMITH

TANK - WATER, 100 GAL, STEEL

0151765 MTM 43668020 SMITH

TANK - WATER, 100 GAL, ALUM

0182760 MTM 43666016 SMITH

TANK - WATER, 125 GAL, STEEL

0151770 MTM 43666021 SMITH

TANK - WATER, 125 GAL, ALUM

1527807 MTM 43666017 SMITH

TANK - WATER, 150 GAL, STEEL

0151765 MTM 43668002 SMITH

TANK - WATER, 150 GAL, ALUM

1527810 MTM 43666018 SMITH

TANK - WATER, 100 GAL

1110324 MTM 1987000 SMITH

TANK - WATER, 125 GAL, STEEL, 30” DIA

1110345 MTM 0125000 SMITH

TANK - WATER, 150 GAL, STEEL

1110352 MTM 1857000 SMITH

TANK - WATER, 100 GAL, S/MT, STEEL

1110350 MTM 43668001 SMITH

TANK - WATER, 100 GAL, S/MT, ALUM

1110362 MTM 43666001 SMITH

TANK - WATER, 125 GAL, S/MT, STEEL

1110348 MTM 43666002 SMITH

TANK - WATER, 150 GAL, S/MT, STEEL

1110353 MTM 43666003 SMITH

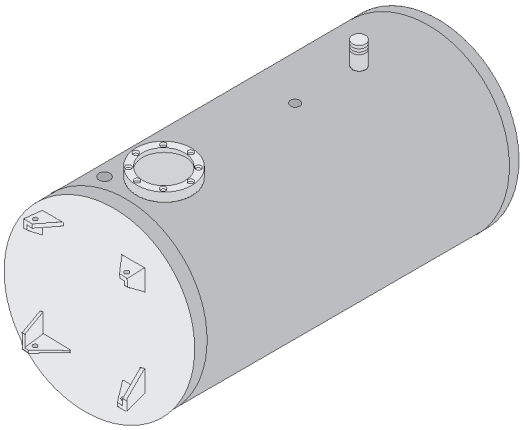

TANK - WATER, 200 GAL, STEEL

1110357 MTM 1814000 SMITH

TANK - WATER, W/CRADLE, 200 GAL, STEEL, SMI

1252976 MTM 1814CRA SMITH

TANK - WATER, 250 GAL STEEL, SMI

1110359 MTM 0250000 SMITH

TANK - WATER, W/CRADLE, 250 GAL, STEEL

1110368 MTM 0250CRA SMITH

TANK - WATER, 300 GAL STEEL, SMI

1112325 MTM 1856000 SMITH

TANK - WATER, W/CRADLE, 300 GAL, 36” DIA

1110358 MTM 1856CRA SMITH

TANK - WATER, 385 GAL, C/MT, STEEL

1110370 MTM 0385000 SMITH

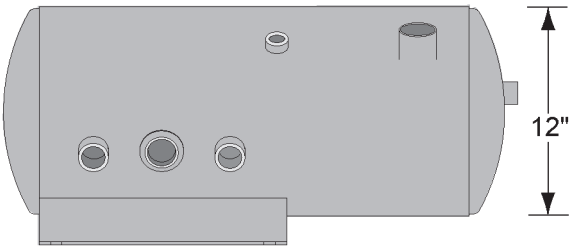

RESERVOIR - OIL, ROUND, 14.5 GAL

1110315 MTM NPN SMITH

THIS PAGE INTENTIONALLY LEFT BLANK

THIS PAGE INTENTIONALLY LEFT BLANK

Axle Parts

CCB

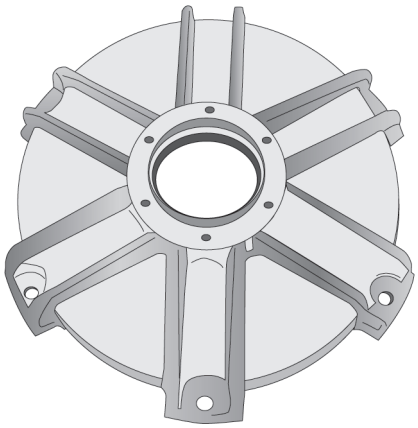

HUB/DRUM ASSY - WEBBED, CHAL

0016478 MTM 5024891 CCB

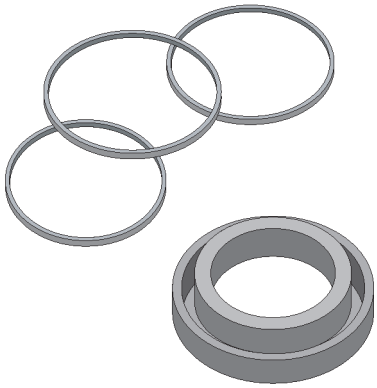

SEAL KIT - BRAKE CALIPER

0106671 MTM 12-500-001 CCB

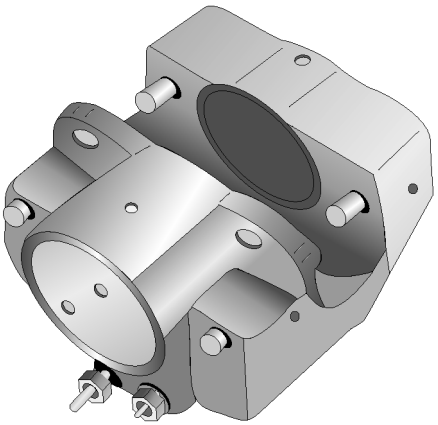

CALIPER - BRAKE, CCB, 12-520-021

0013752 MTM 1110477 CCB

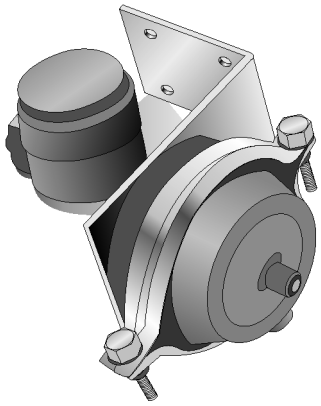

ACTUATOR - POWER, 12-460-017

0015888 MTM 1540229 CCB

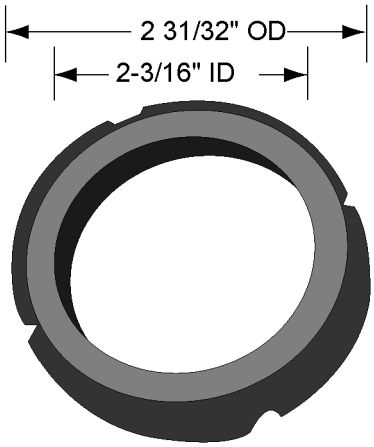

NUT - LOCK, AXLE, N-11

0100664 MTM 1031245 CCB

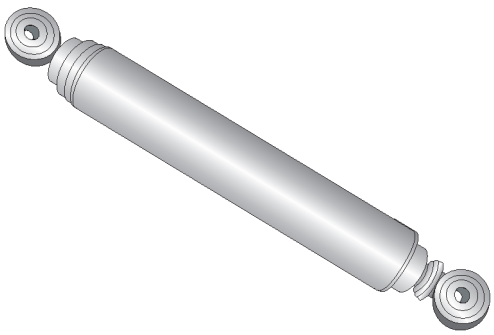

SHOCK - BAL, CHA, SC2945

0016469 MTM 1540212 CCB

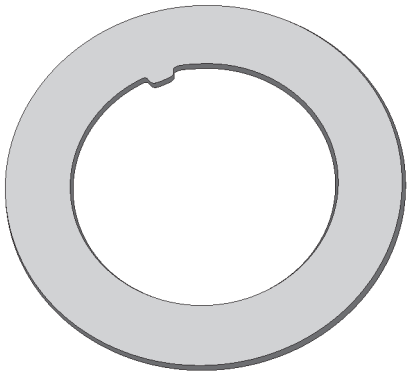

WASHER - AXLE (TIM K91511)

0015056 MTM 1050661 CCB

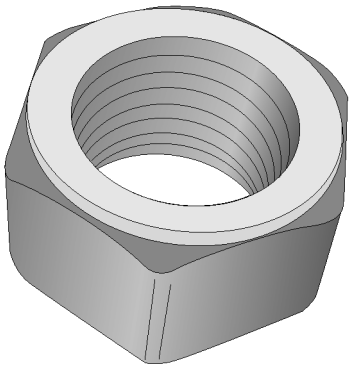

NUT - WHEEL STUD, 5/8”-1 NC

0015792 MTM 1031798 CCB

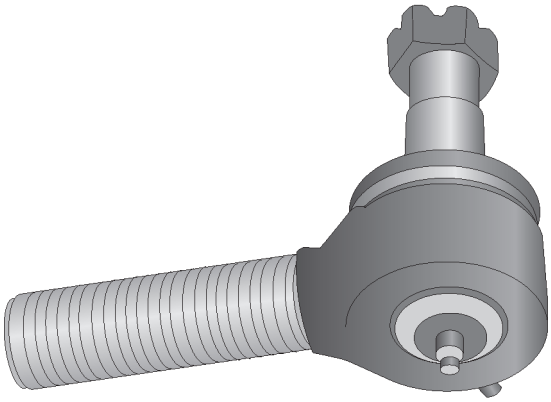

END - TIE ROD, DISC BRAKE, LH

0013825 MTM 1050659 CCB

END - TIE ROD, DISC BRAKE, RH

0014099 MTM 1050660 CCB

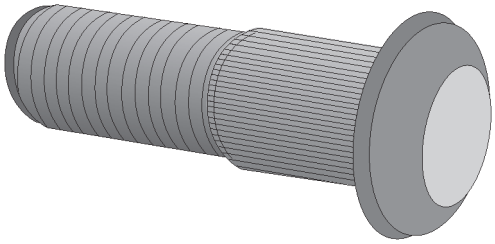

STUD - WHEEL, 3/4” SAE, RH

0015097 MTM 1032687 CCB

STUD - WHEEL, 3/4” SAE, LH

0015096 MTM 1032688 CCB

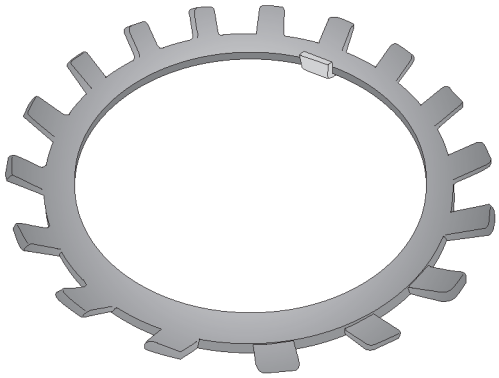

WASHER - LOCK, AXLE, W-11

0100663 MTM 1050599 CCB

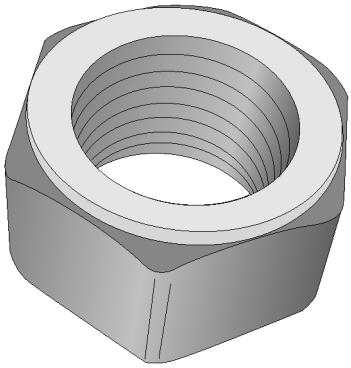

CLAMP - AXLE RIM

0015792 MTM 1031798 CCB

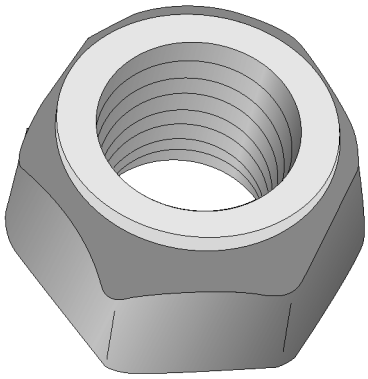

NUT - WHEEL, 3/4" SAE, RH

0015098 MTM 1032689 CCB

NUT - WHEEL, 3/4" SAE, LH

0015094 MTM 1032690 CCB

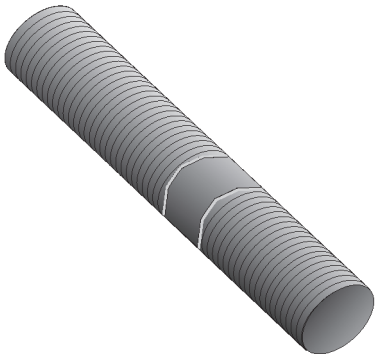

STUD - WHEEL, DAYTON, EUCLID

0015821 MTM 1031797 CCB

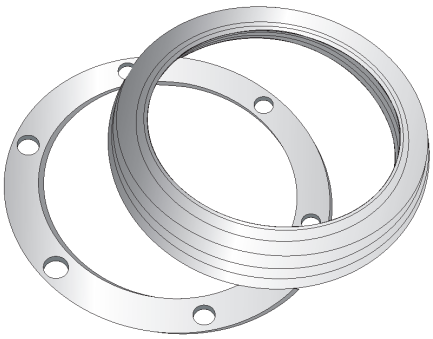

GASKET - AXLE

0015796 MTM 1110389 CCB

SEAL - AXLE

0016887 MTM 1690659 CCB

KIMBLE

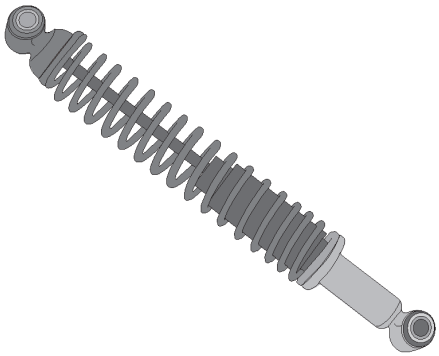

SHOCK - STABILIZER

0188206 MTM T91-00002-00 KIMBLE

LONDON

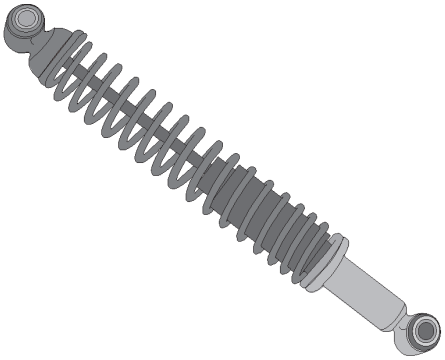

SHOCK - STABILIZER

0188206 MTM MB-37737-30 LONDON

MTM

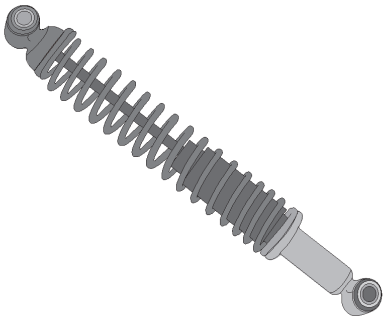

SHOCK - STABILIZER

0188206 MTM

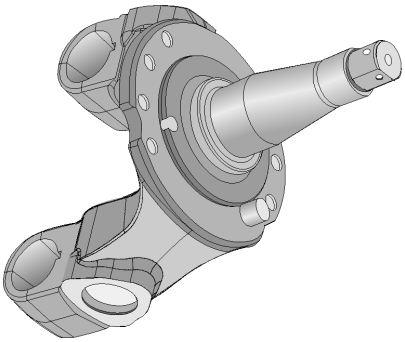

SPINDLE ASSY - WESTPORT AXLE, BMIII, RH

0125026 MTM

SPINDLE ASSY - WESTPORT AXLE, BMIII, LH

0125025 MTM

SPINDLE ASSY - WESTPORT AXLE, BMV, RH

0189186 MTM

SPINDLE ASSY - WESTPORT AXLE, BMV, LH

0189185 MTM

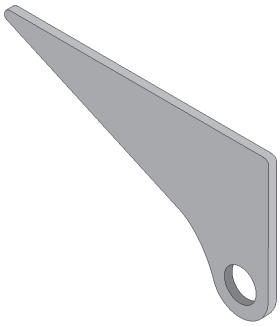

MT - EYE, SHOCK ABSORBER, BMV

1340680 MTM

REX

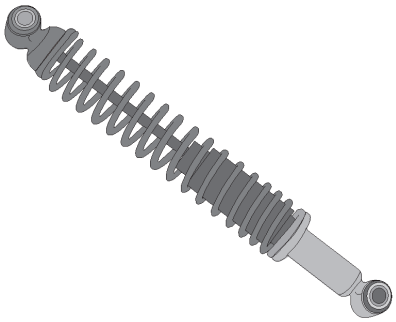

SHOCK - STABILIZER

0188206 MTM 102-13441-10 REX

SCHWING

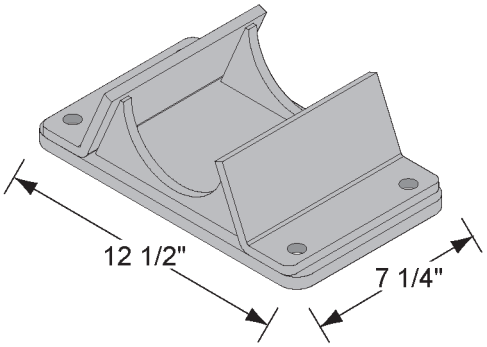

SADDLE - AXLE, BM

1333397 MTM 30389339 SCHWING

MTM / LONDON

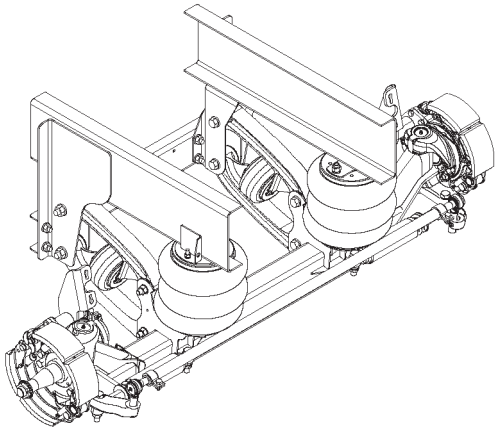

AXLE ASSY - LONDON

1235298 MTM

HENDRICKSON PUSHER AXLES

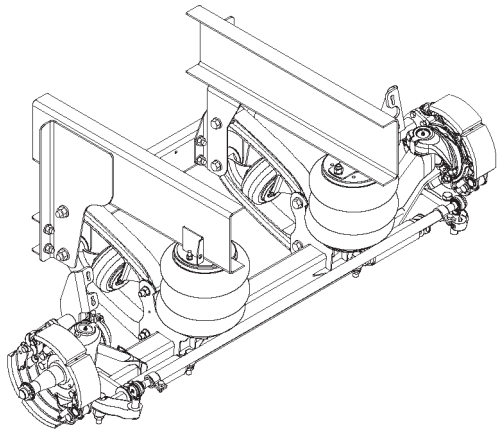

AXLE ASSY - ST COMP, 13C ALU W/LOCK

1235298 MTM

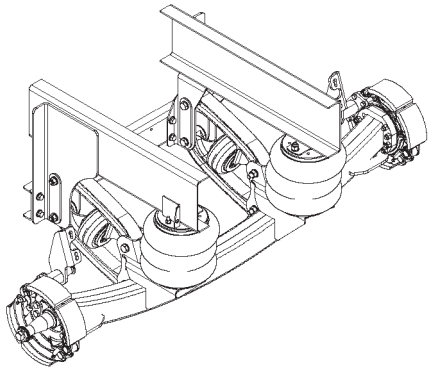

AXLE ASSY - NS COMP, FX CD

1226294 MTM

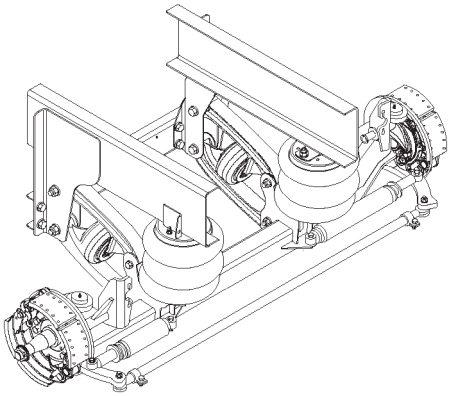

AXLE ASSY - ST COMP, 8K HP D-14”

1112421 MTM

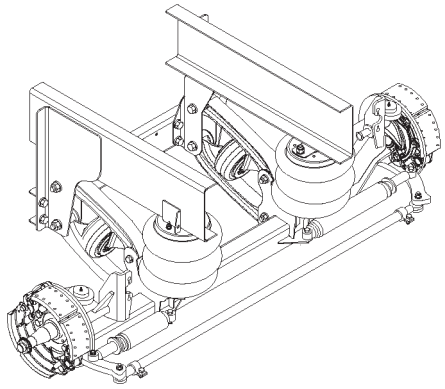

AXLE ASSY - ST COMP, 10K HP

1233686 MTM

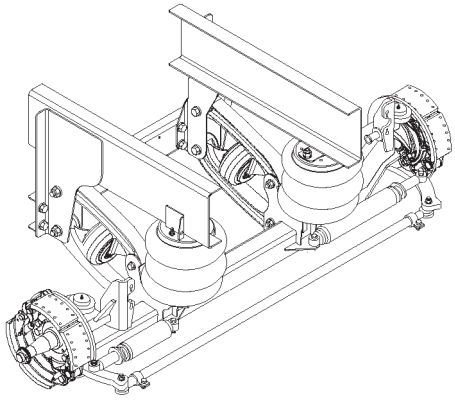

AXLE ASSY - ST COMP 8K HP C-12”

1254751 MTM

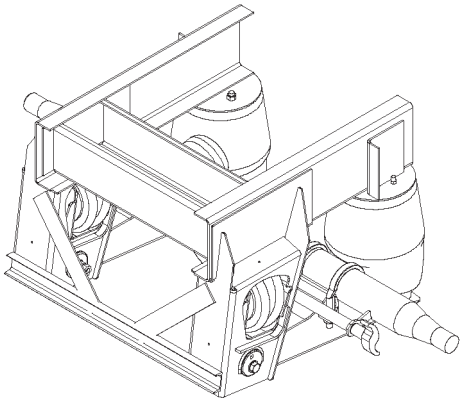

AXLE ASSY - NS, 20K HP HLM3

1238696 MTM

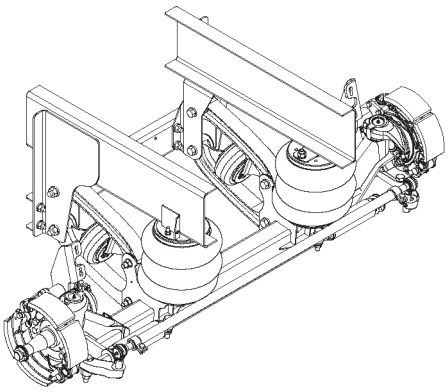

AXLE ASSY - ST COMP, 13C HP W/FM

1101005 MTM

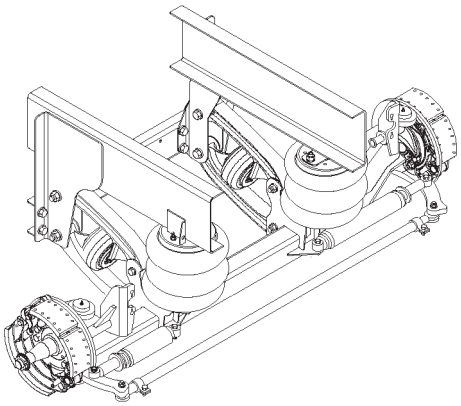

AXLE ASSY - ST FBC, 10K HP, 8 STUD 16.5”

1320276 MTM

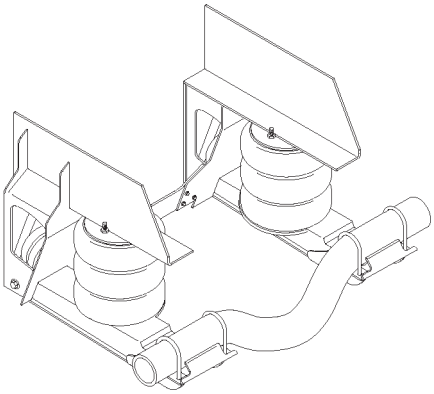

AXLE ASSY - NS, HP, 8 STUD, HLD 13K

1268278 MTM

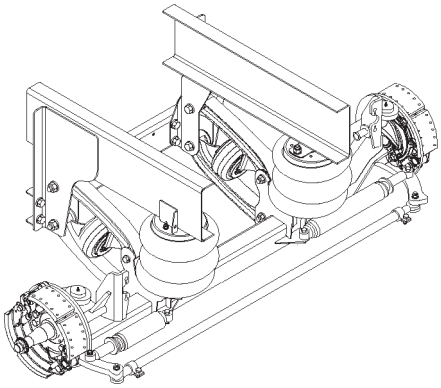

AXLE ASSY -ST FBC, 10K HP, 8 STUD 12.5

1233686 MTM

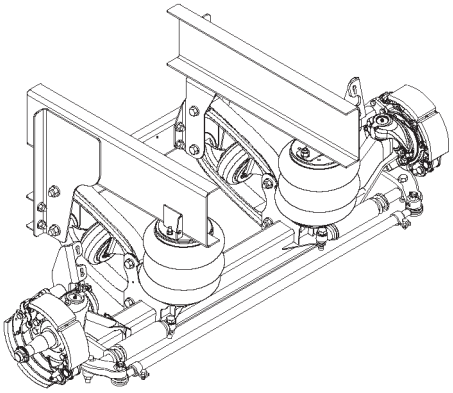

AXLE ASSY - ST COMP, 13 HP ALUM

1230551 MTM

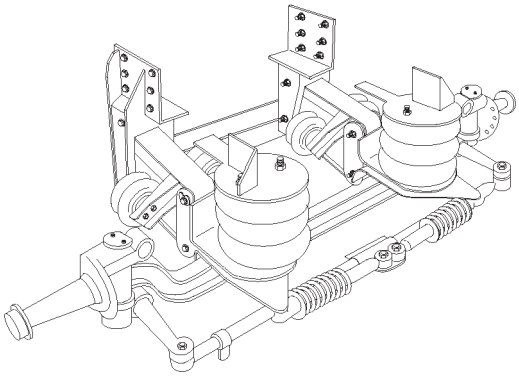

AXLE ASSY - ST P LIFT, 20K, HP C

1254750 MTM

TAG AXLES

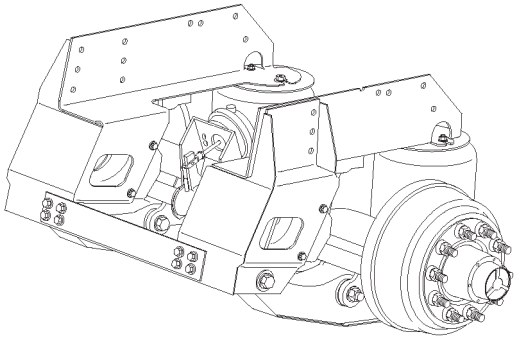

AXLE - TAG, NS PSH, 5 SPOKE 20”

0188150 MTM

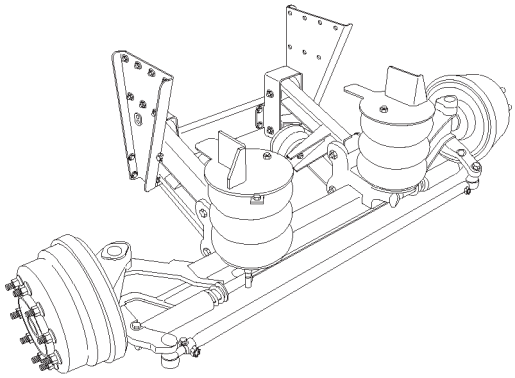

AXLE ASSY - TAG, ST PLIFT, W/LOCK UWM

1142957 MTM

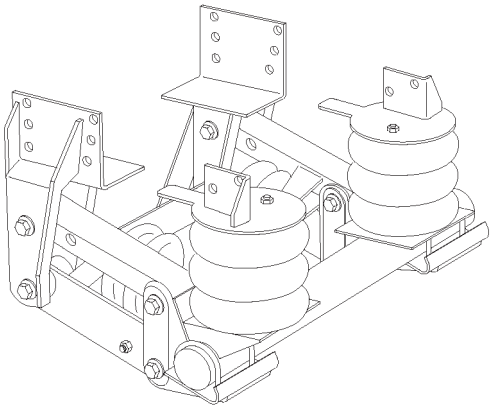

AXLE ASSY - TAG, NS HP HLN

1107228 MTM

AIR BAGS / AIR SPRINGS

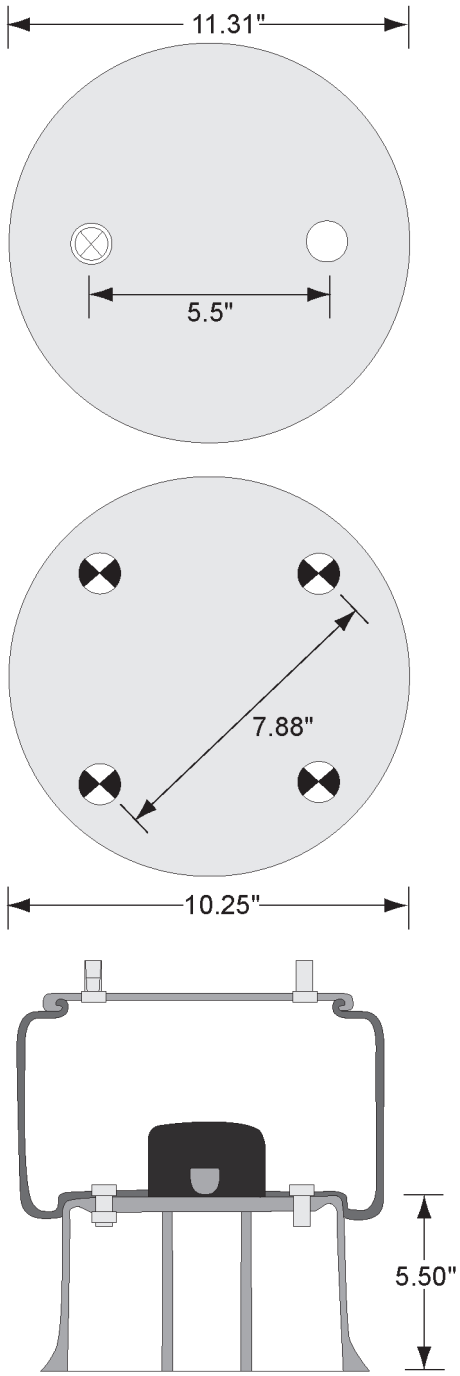

SPRING - AIR, ARD246, 4 BOLT, NEWAY

1138978 MTM 14667 ADV

W01-675-9141 Firestone

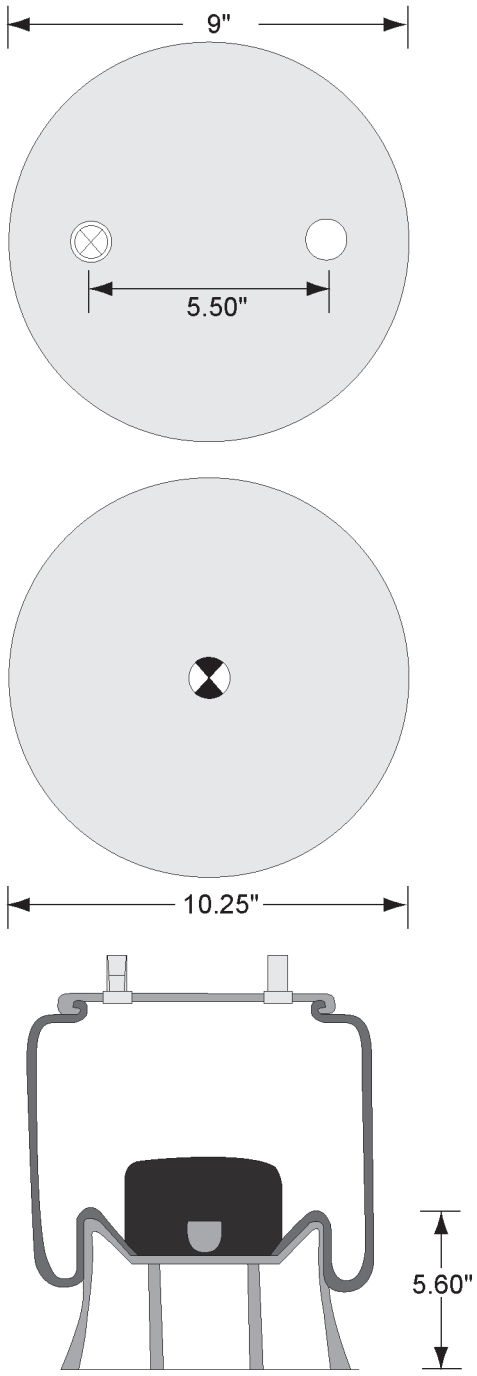

SPRING - AIR, ART140, 1 STUD, NEWAY

1138994 MTM 14669 ADV

W01-675-8903 Firestone

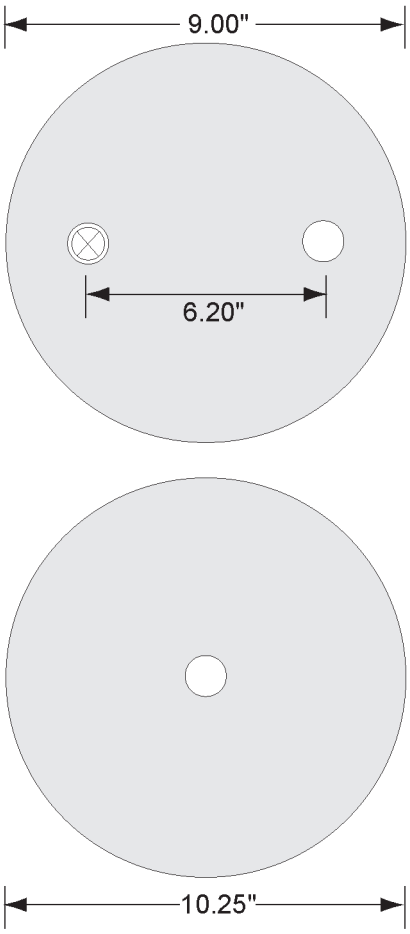

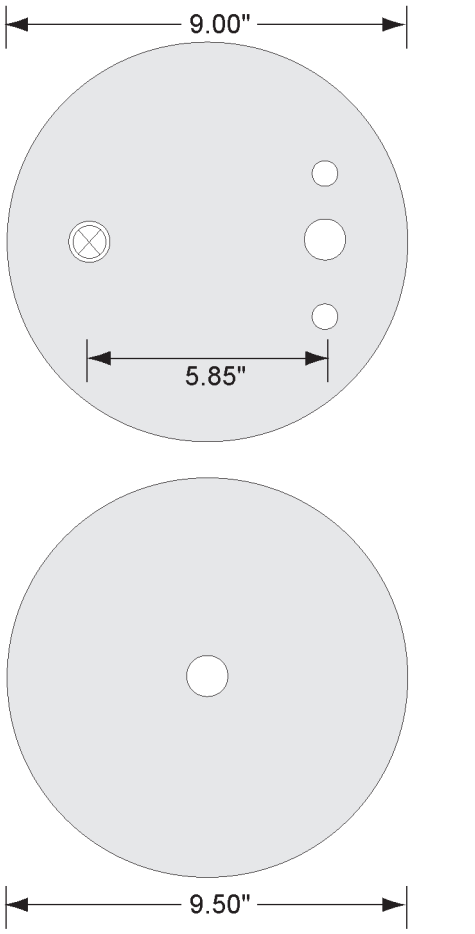

SPRING - AIR, DOWN, 1 STUD

6HB202 MTM 15220 ADV
W01-W20-9370 Firestone

SPRING - AIR, AD123, 2 STUD

1138990 MTM 19480 ADV
W01-358-9501 Firestone
1R12-388 Goodyear

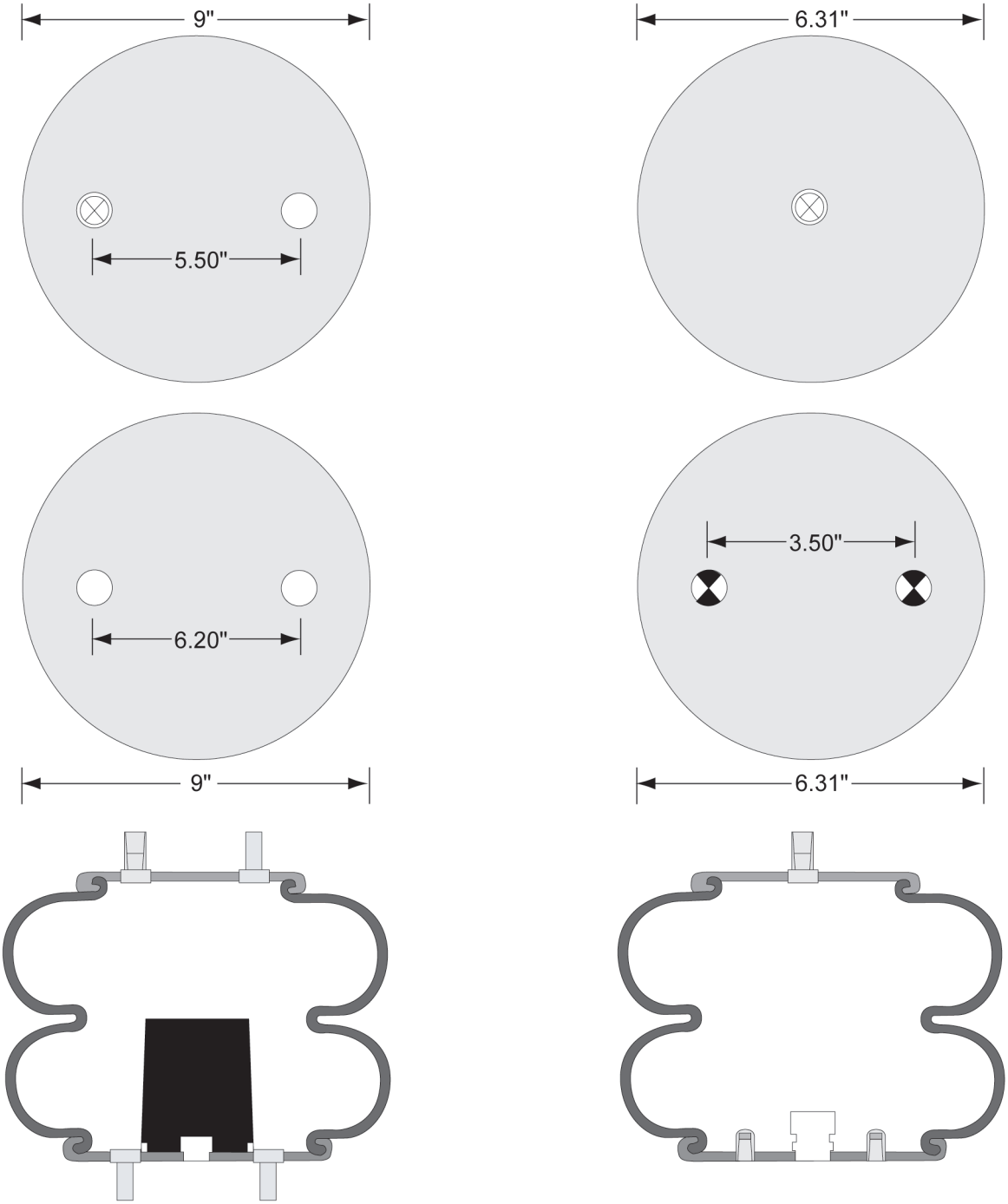

SPRING - AIR, UP, SUSP INC

1133970 MTM 12118 ADV
W01-358-7405 Firestone

SPRING - AIR, LIFT, PARALIFT

0188209 MTM 20208 ADV
W01-455-7786 Firestone

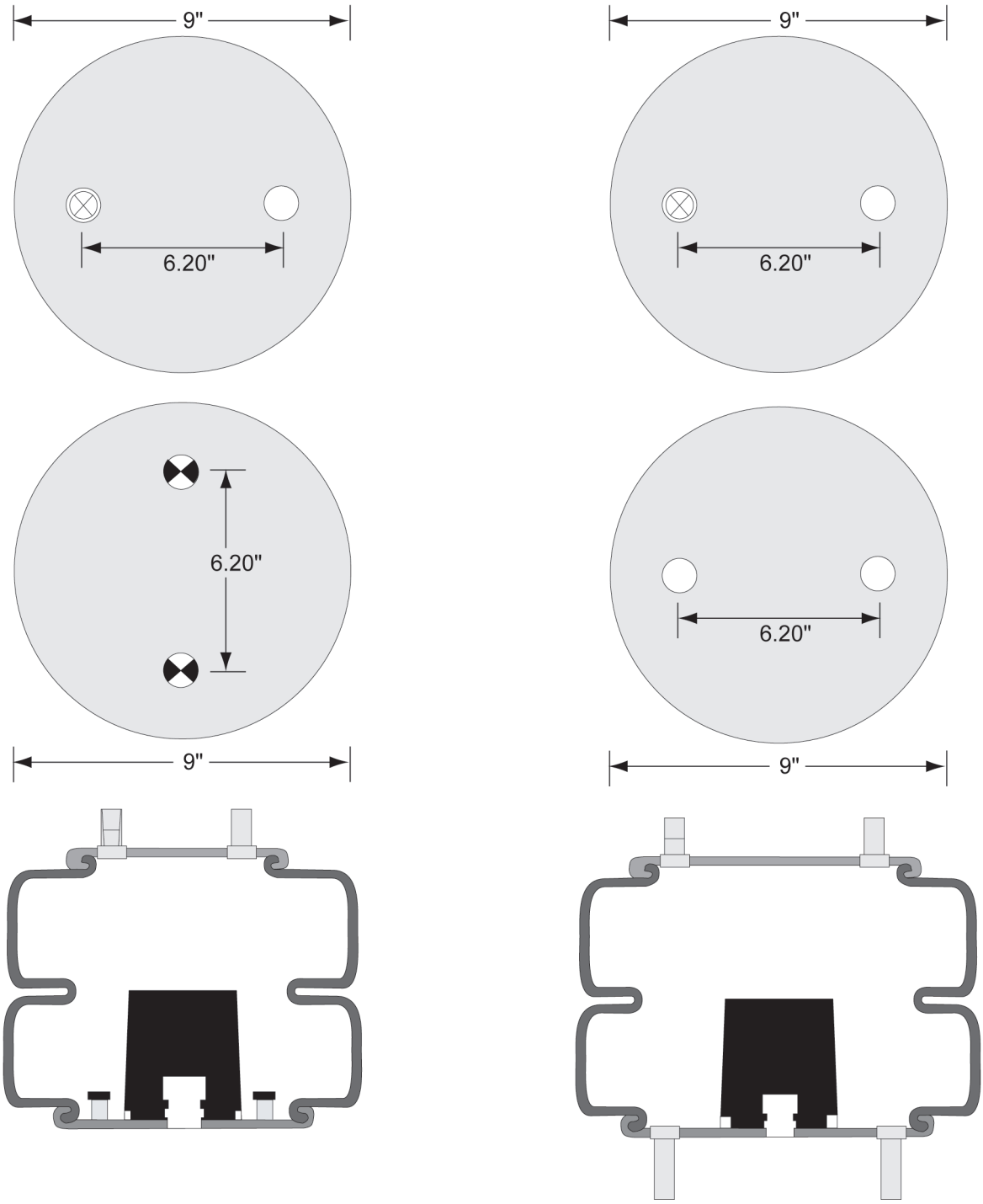

SPRING - AIR, USA, UP, HENDRICKSON

1134319 MTM 20210 ADV
W01-455-7547 Firestone

SPRING - AIR,UP, HD, WATSON/CHALIN

1146598 MTM 20366 ADV
W01-358-7550 Firestone

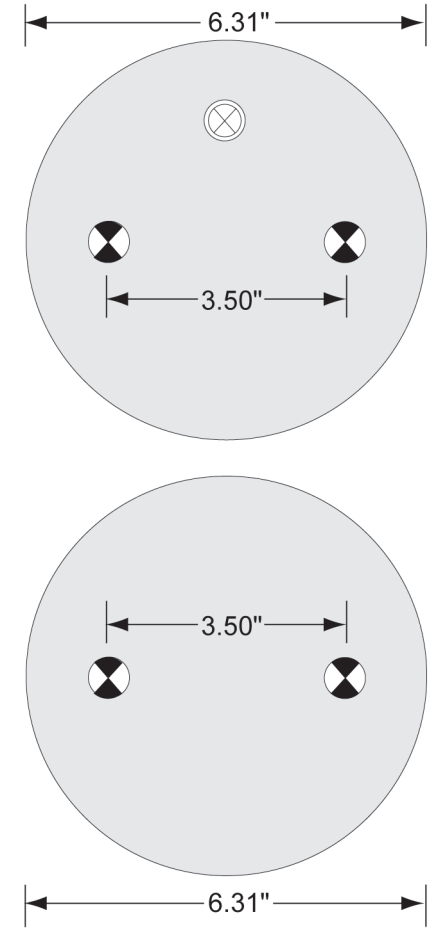

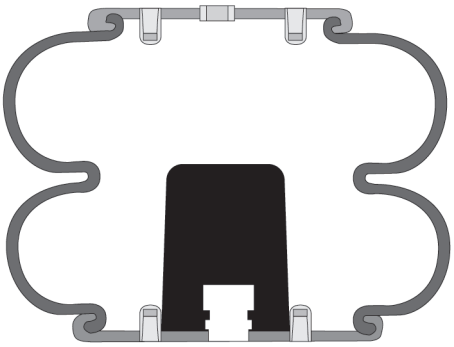

SPRING - AIR, STO27/74, UP, HENDRICKSON

1134189 MTM 15249 ADV

W01-455-6935 Firestone

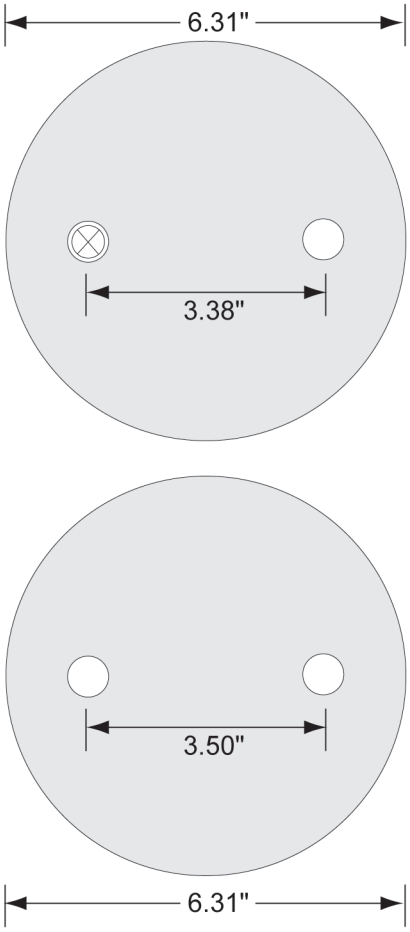

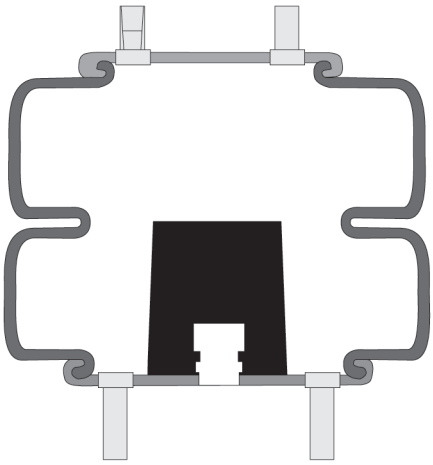

SPRING - AIR, UP

0188176 MTM 12109 ADV

W01-358-6944 Firestone

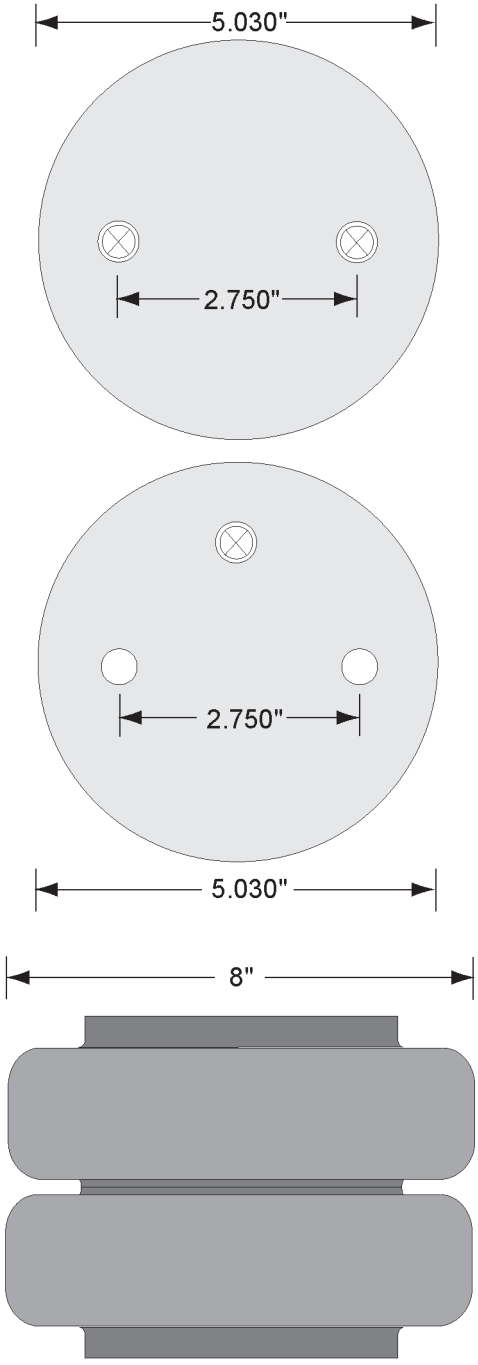

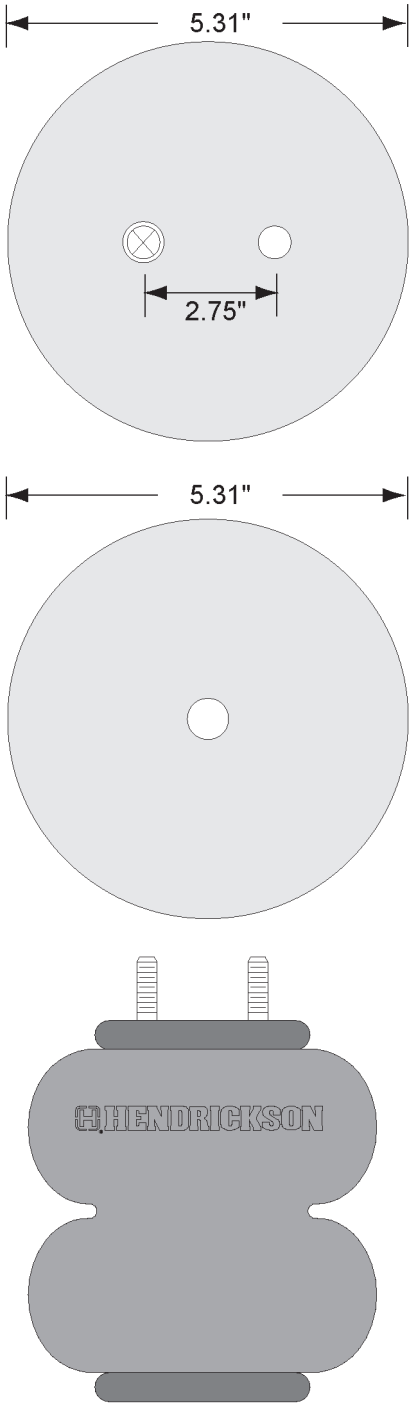

SPRING - AIR, UP, HENDRICKSON

1253793 MTM 28219 ADV
005079 Hendrickson

SPRING - AIR, LIFT, HENDRICKSON

1233392 MTM 001347 Hendrickson

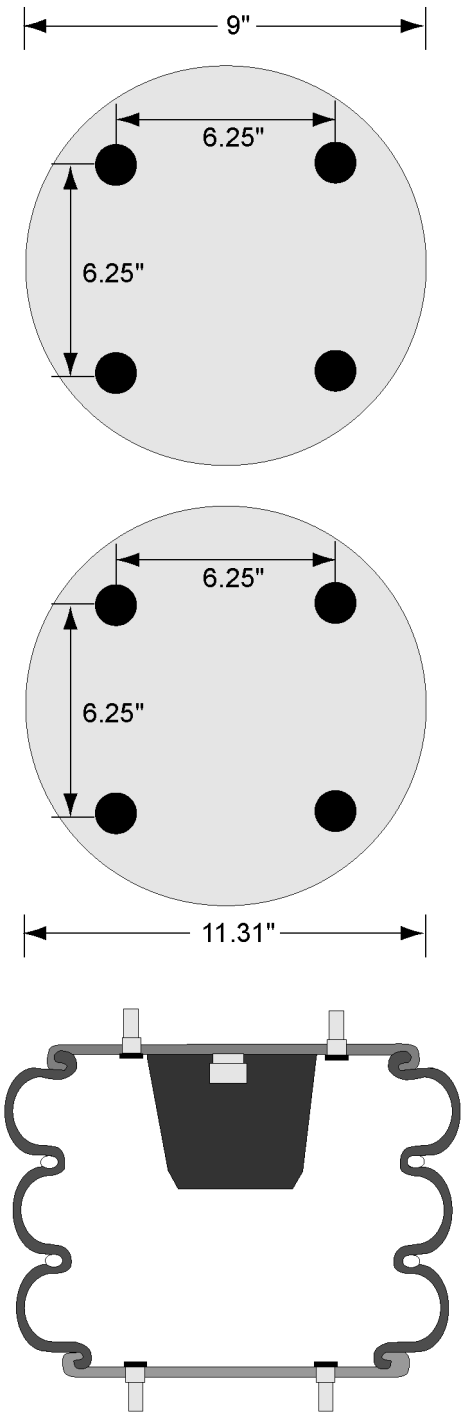

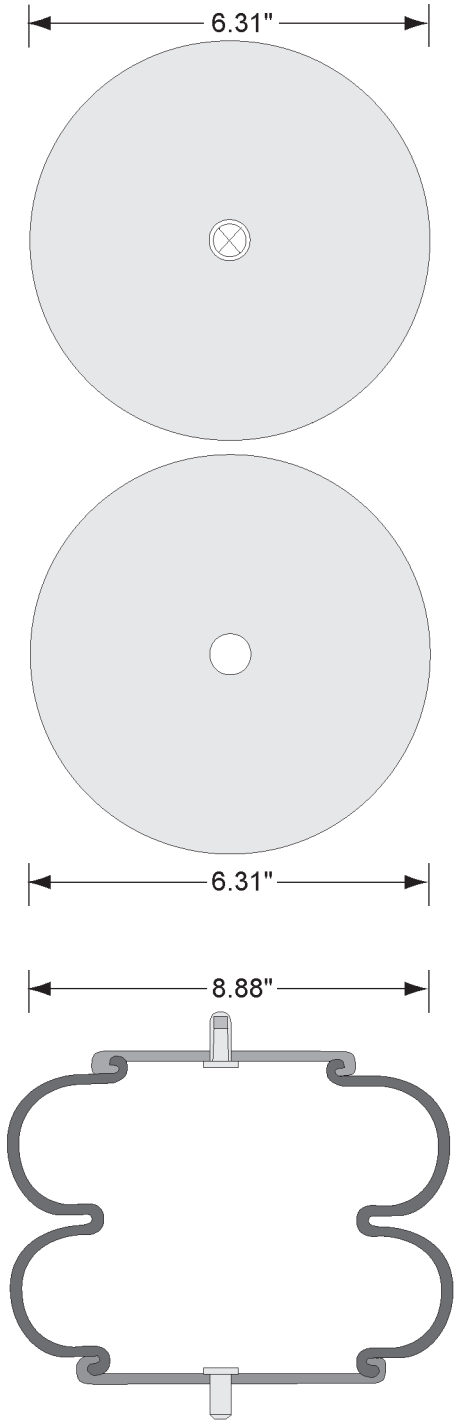

SPRING - AIR, GRA BELLOWS

0087008 MTM

W01-358-7818 Firestone
1014 Reyco Granning
3B14-359 Watson and Chalin

SPRING - AIR, UP, 1 STUD, WATSON

6HD689 MTM

AS-0058 Watson amd Chalin

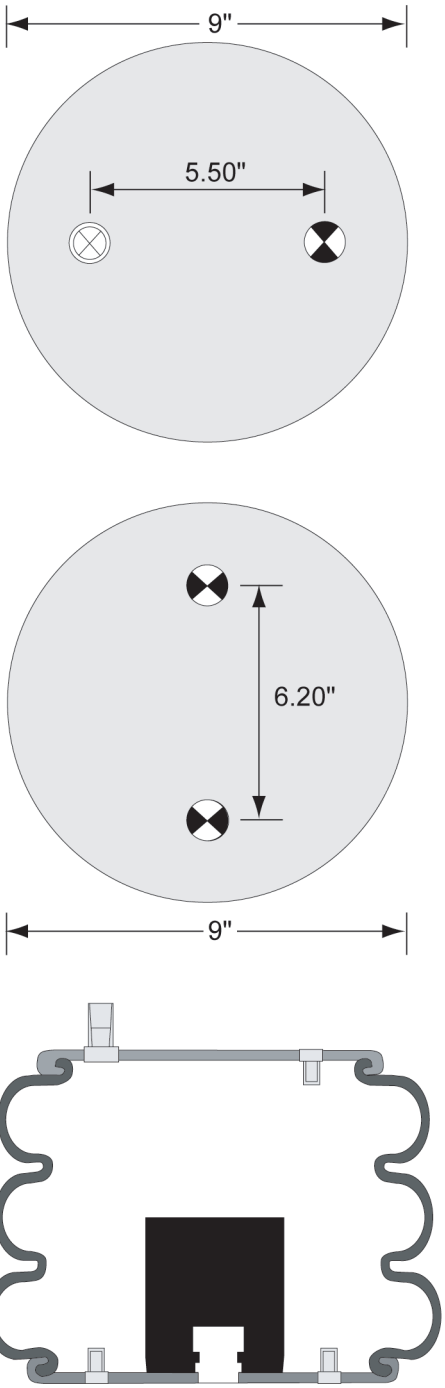

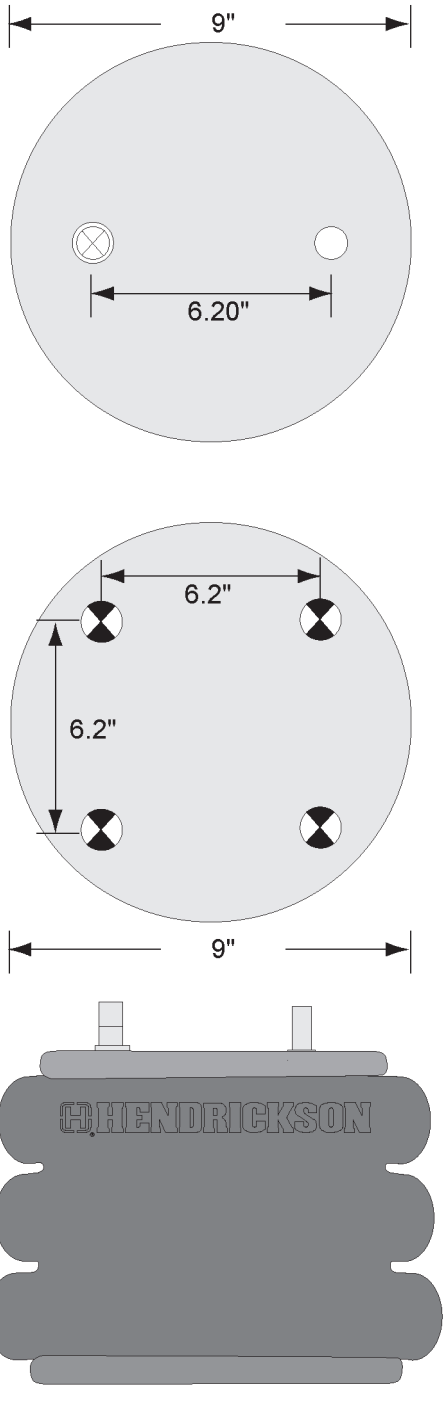

SPRING - AIR, SUSPENSION

3HB769 MTM AS-0048 Watson and Chalin

SPRING - AIR, DOWN, PARALIFT, HENDRICKSON

0188210 MTM B-14487 Hendrickson

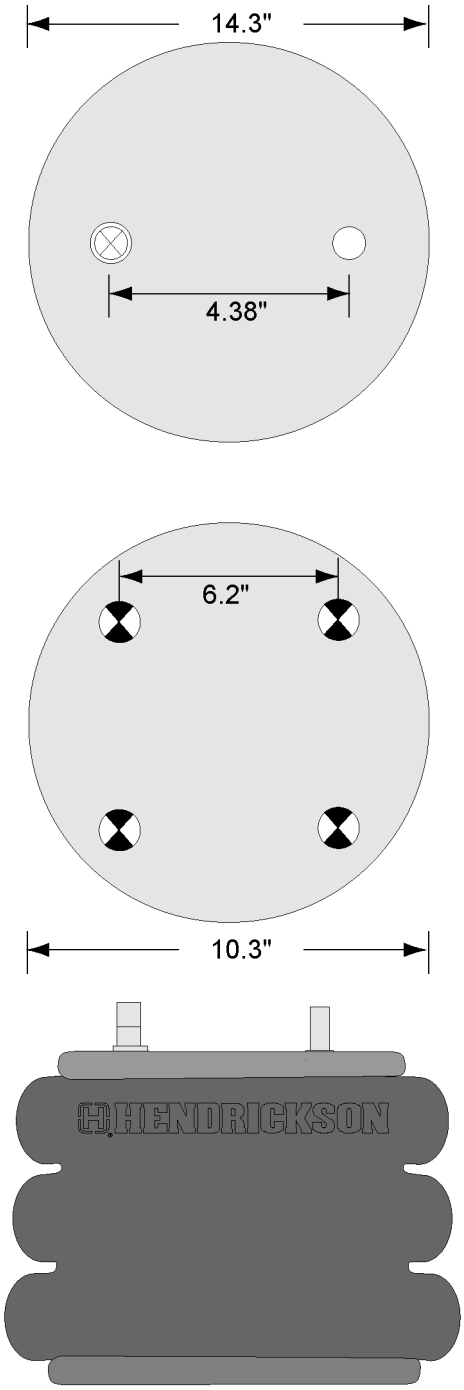

SPRING - AIR, DOWN, HENDRICKSON

1233393 MTM 004645 Hendrickson

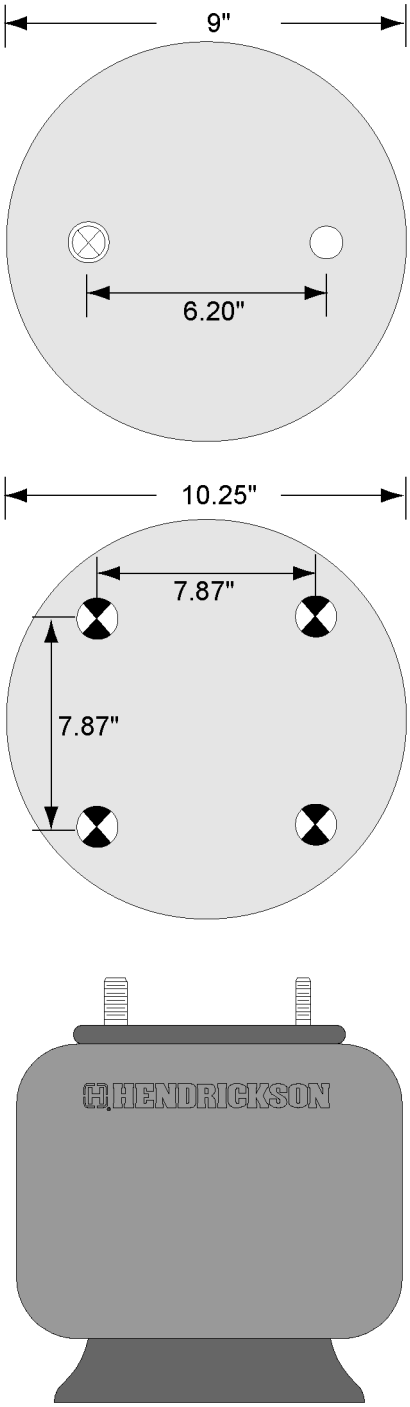

SPRING - AIR, DOWN, HENDRICKSON

1131453 MTM B-14249 Hendrickson

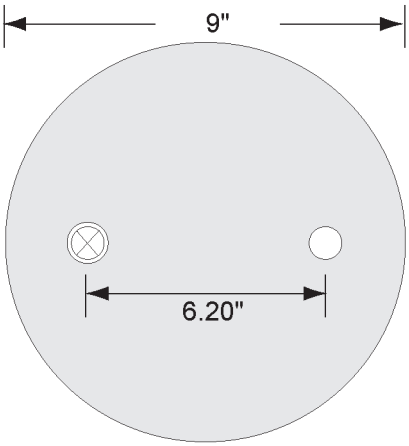

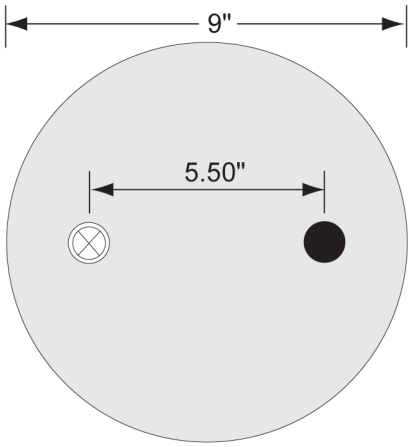

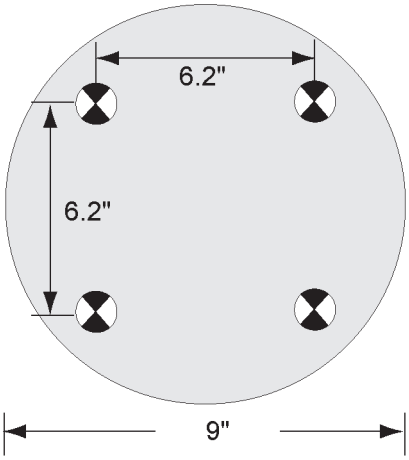

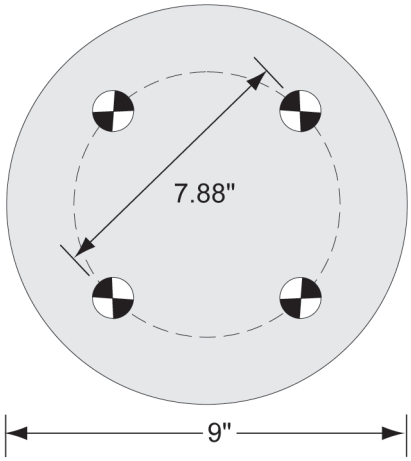

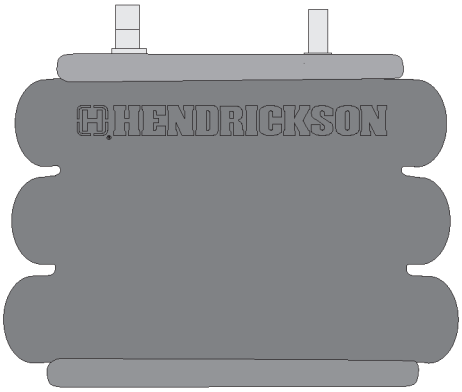

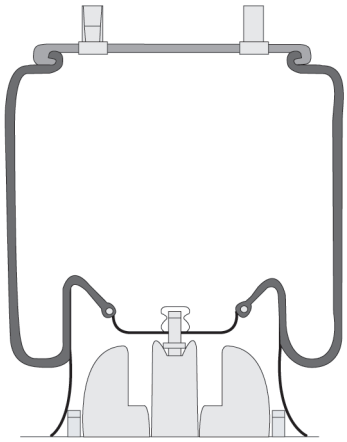

SPRING - AIR, DOWN, PARALIFT

0188210 MTM B-14487 Hendrickson

SPRING - AIR, GRA BELLOWS

0087024 MTM W01-358-9083 Firestone
1359 Reyco Granning
1R12-066 Watson and Chalin

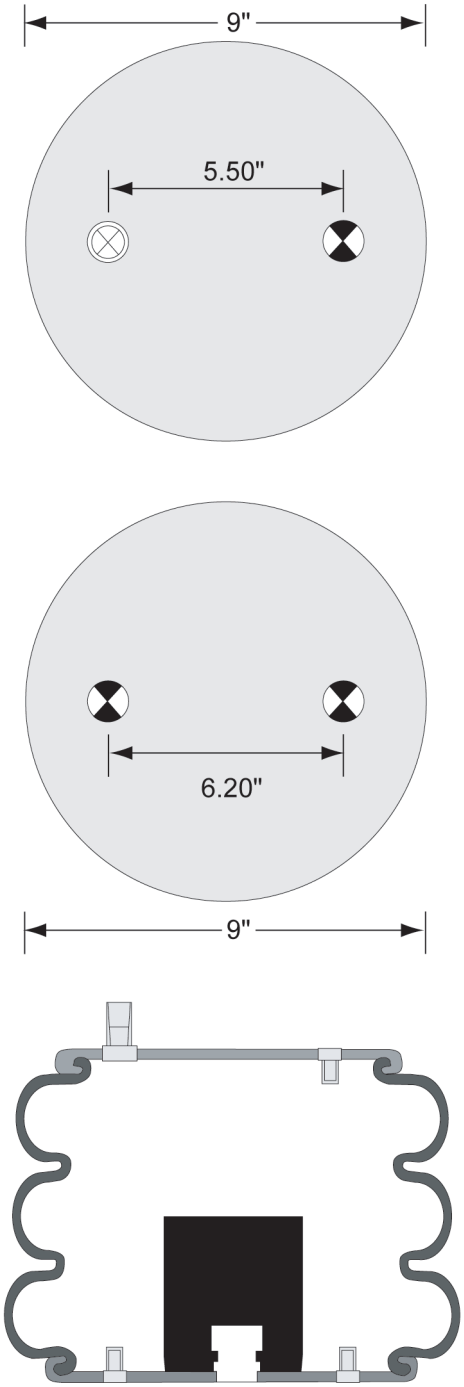

SPRING - AIR, WAT/CHAL PARA-SUSP

3HS768 MTM AS-0019 Watson and Chalin

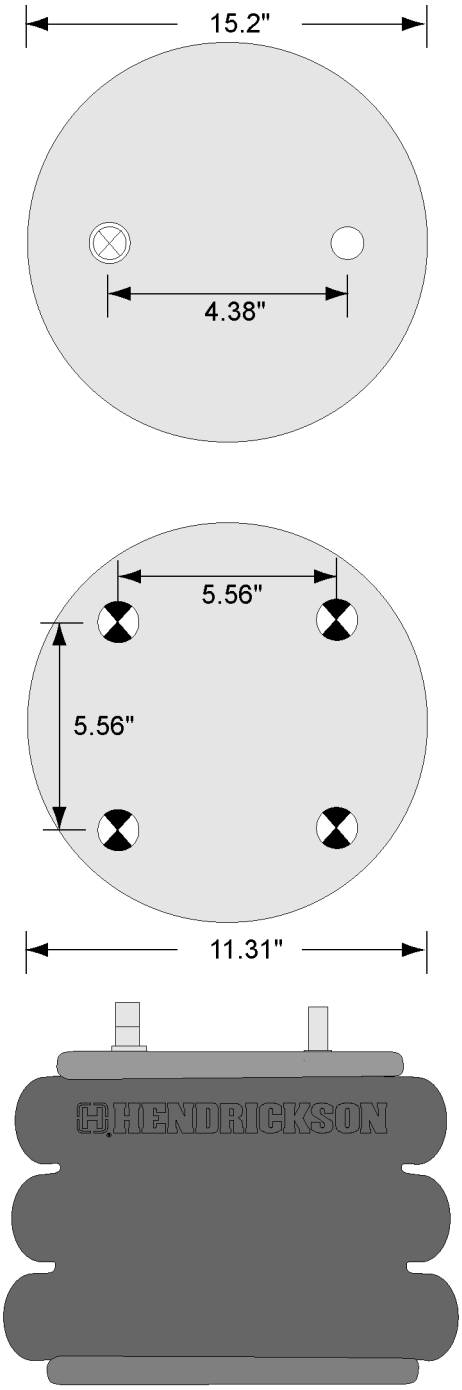

SPRING - AIR, UP, HENDRICKSON

1327681 MTM 004828 Hendrickson

BRAKES & DUST SHIELDS

SHIELD - DUST, MTM/WESTPORT, EATON

0183173 MTM

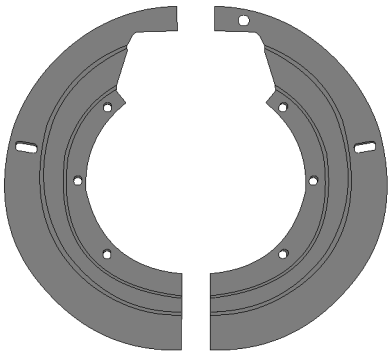

SHIELD - DUST, BM AXLE, ROCKWELL

0125065 MTM

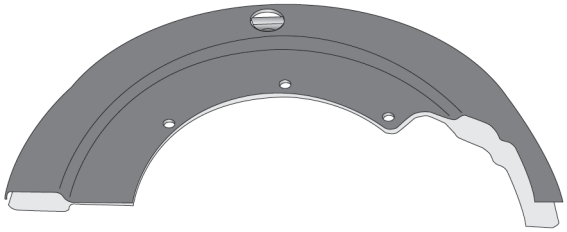

SHIELD - DUST KIT, 1 UPR/1 LWR, DANA

0188032 MTM

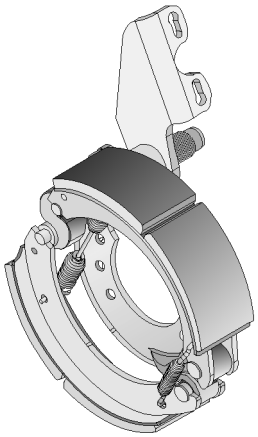

BRAKE ASSEMBLY - Q+, 9.18 CAM, LH

0189205 MTM

BRAKE ASSEMBLY - Q+, 9.18 CAM, RH

0189204 MTM

BRAKE ASSEMBLY -15X4, HENDRICKSON, LH

1275119 MTM

BRAKE ASSEMBLY -15X4, HENDRICKSON, RH

1275120 MTM

THIS PAGE INTENTIONALLY LEFT BLANK

THIS PAGE INTENTIONALLY LEFT BLANK

Axle Assemblies

TEREX BM Axle

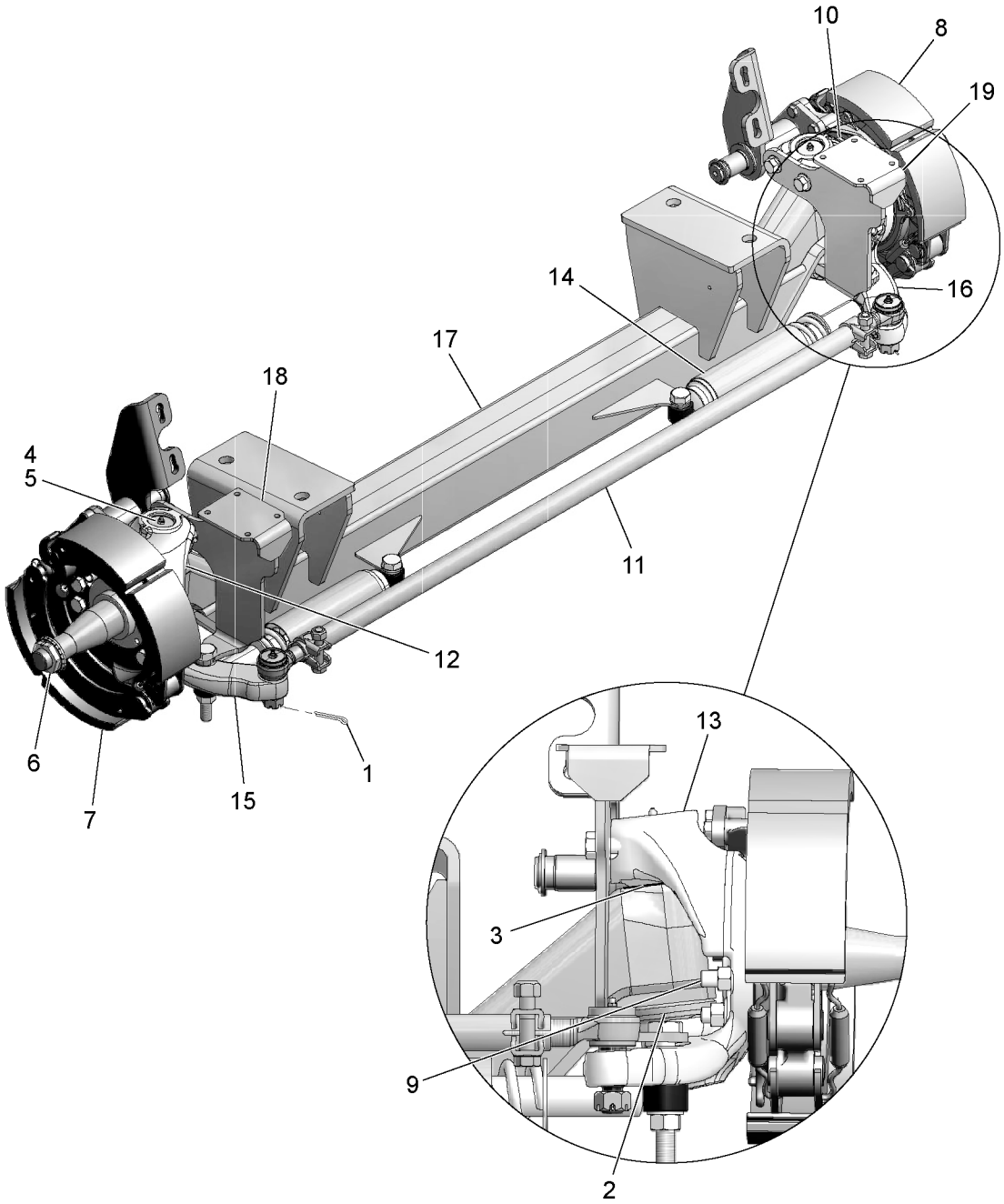

Item	MTM Part No.	TEREX Part No.	Description
1.	1275112	001524-15	COTTER PIN
2.	1275113	001620	THRUST WASHER
3.	1275115	001764-1	SHIM
4.	1KK819	003263	KING PIN CAP ASSY
5.	1145695	003267	RETAINING RING
6.	8HA490	003269	SPINDLE NUT
7.	3KK435	003274-1	15 X 4 BRAKE LH
8.	3KK436	003274-2	15 X 4 BRAKE RH
9.	1272387	003349-1	5/8-11X2.5” HH BOLT
10.	3KK439	003405-1	5/8-11X1-1/4 SHCS
11.	1329912	003942	TIE ROD ASSY
12.	NPN	004070-1	UP-KP CONN W/ FENDER HOLES
13.	NPN	004070-2	UP-KP CONN W/ FENDER HOLES
14.	NPN	004291	STABILIZER KIT
15.	NPN	004622-1	KNUCKLE BACKBONE
16.	NPN	004622-2	KNUCKLE BACKBONE
17.	NPN	006238	AXLE WELD
18.	1330302	006942-1	FENDER MOUNT BRKT
19.	1330303	006942-2	FENDER MOUNT BRKT

Hendrickson Axle

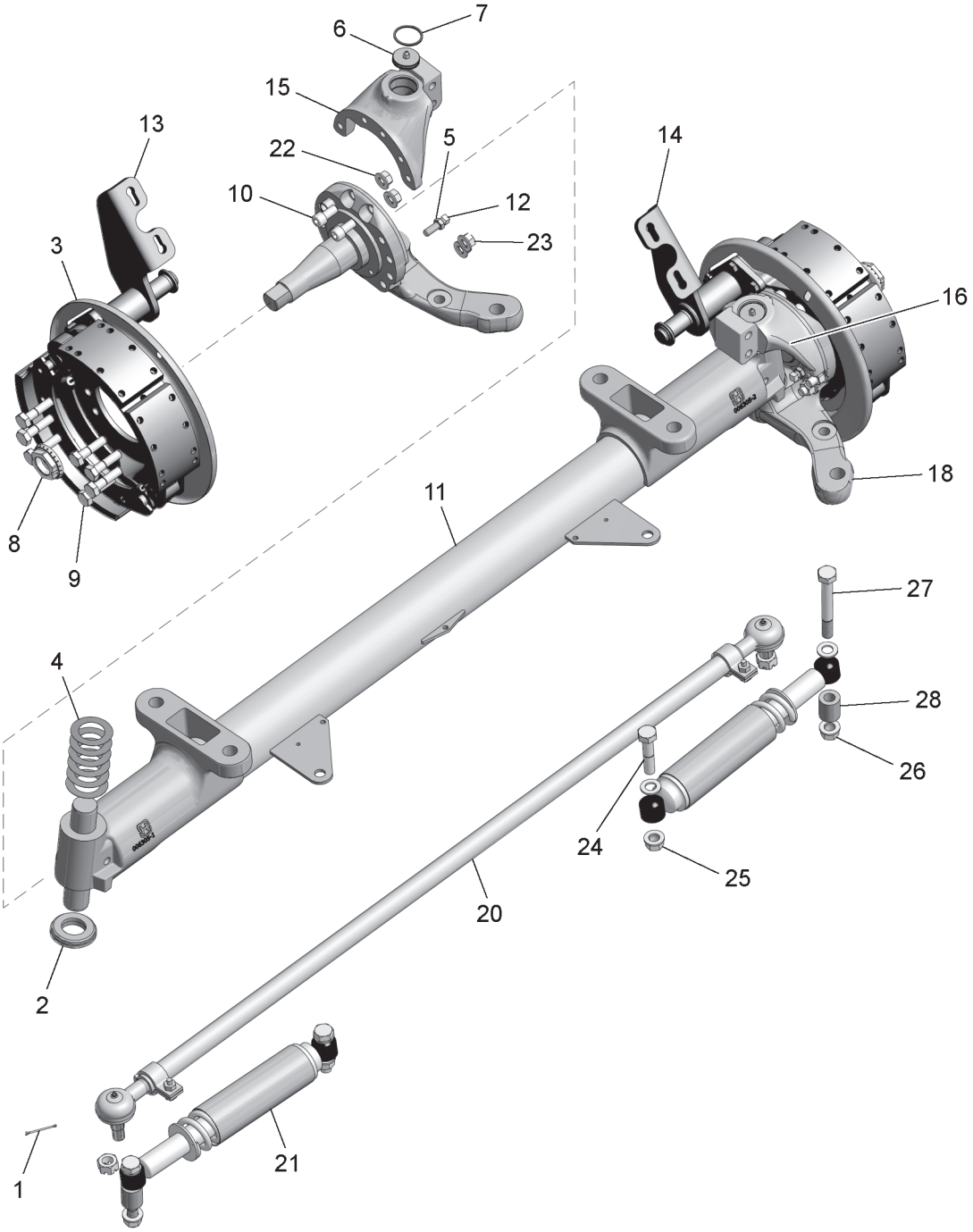

Hendrickson Axle Assemblies

1535563 AXLE - BMV HUB PILOT

1254722 AXLE - BMV STUD PILOT

1263628 AXLE - BMV STUD PILOT W/ABS

1263629 AXLE - BMV HUB PILOT W/ABS

Item	MTM Part No.	Hendrickson Part No.	Description
1.	1275112	001524-15	COTTER PIN
2.	1275113	001620	THRUST BEARING
3.	1275114	001682	DUST SHIELD KIT, (15 x 4) ArM
4.	1275115		SHIM
5.	NPN	002346-3	1/2-13 HEX JAM NUT
6.	1145694	003263	KING PIN CAP ASSY
7.	1145695	003267	RETAINING RING
8.	1139105	8AH490	AXILOK SPINDLE NUT
9.	NPN		5/8-11 X 2-1/2 HH BOLT
10.	NPN	003405-1	5/8-11X1-1/4 SHCS
11.	1275117	006307	AXLE WELDMENT
12.	1275118	006344	SET SCREW
13.	1275119	006347-1	15x4 BRAKE - BRIDGE AXLE (LEFT HAND)
14.	1275120	006347-2	15x4 BRAKE - BRIDGE AXLE (RIGHT HAND)
15.	NPN		UPPER KINGPIN ASSM. (LEFT HAND)
16.	NPN		UPPER KINGPIN ASSM. (RIGHT HAND)
17.	1275128	006639-1	BACKBONE (LEFT HAND)
18.	1275129	006639-2	BACKBONE (RIGHT HAND)
19.	NPN		KINGPIN SERVICE KIT
20.	1275173	006715	TIE ROD ASSEMBLY
21.	1275175	006766	STABILIZER KIT
22.	1272388	SA-1500-7	5/8” FLAT WASHER HARD F436
23.	NPN		5/8-11 LOCK NUT
24.	NPN		3/4-10 X 3-1/2 HH BOLT GR 8
25.	NPN		3/4” FLAT WASHER HARD F436
26.	NPN		3/4-10 LOCK NUT
27.	NPN		3/4-10 X 6 HH BOLT GRADE 8
28.	1516479	006645	SPACER

Watson Axle Assembly (1 of 3)

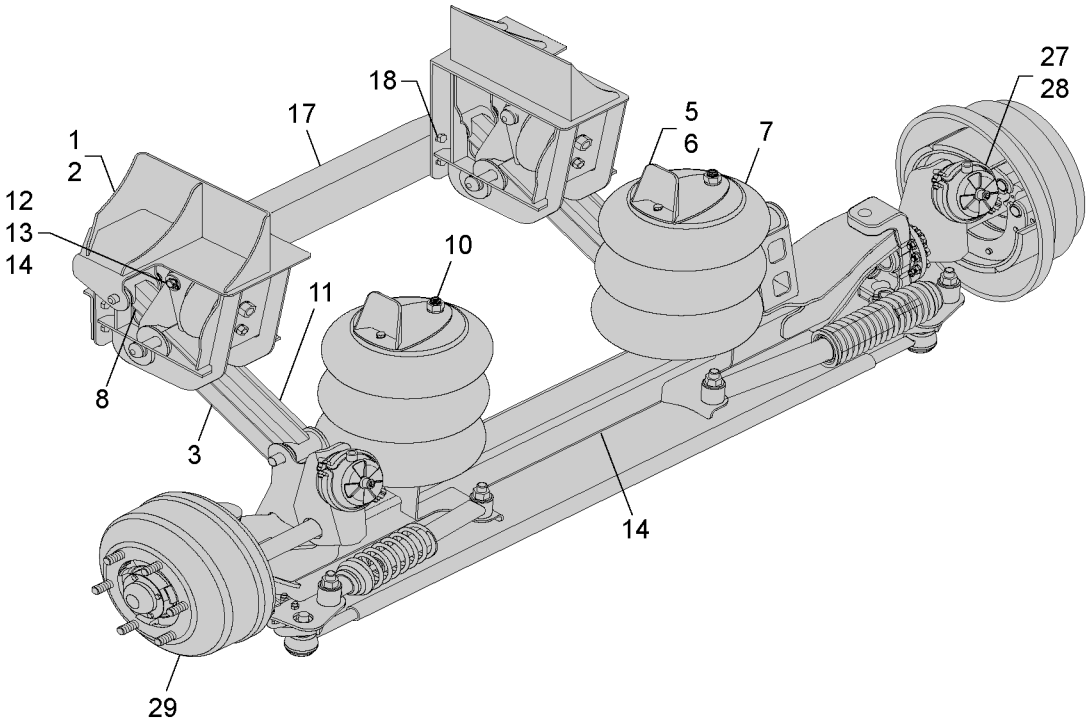

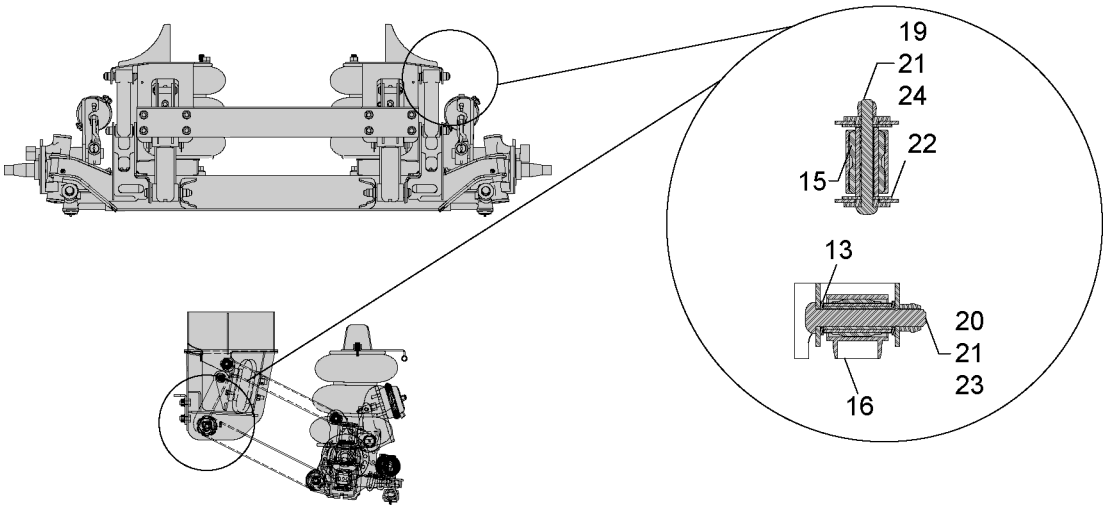

Item	MTM Part No.	Watson Part No.	Description
1.	1272522	920397-10	ASSY, HANGER SIDE RAIL, LH
2.	1272523	920397-20	ASSY, HANGER SIDE RAIL, RH
3.	1272524	930187-04	ASSY, ARM
4.	1272525	160047-04	ASSY, AXLE
5.	1272526	950185-10	ASSY, UPPER BAG PLATE, LH
6.	1272527	950185-20	ASSY,UPPER BAG PLATE,RH
7.	1272503	33HB769	SPRING, AIR LOAD
8.	1272528	50155	PLATE, LIFT BAG
9.	1272499	16061	PACK,HARDWARE, AIR SPRING
10.	1272530	16064	PACK,AIR BAG
11.	1272505	12972	PIN, 3/4 X 3-1/2
12.	1272508	33820	WASHER,FLAT,3/4 HARDENED
13.	1272506	11941	COTTER PIN
14.	1272494	12931-01	BUSHING,HANGER PIVOT
15.	1272531	12954	ASSY, TORQUE ROD
16.	1272532	90848	CROSSMEMBER
17.	1272507	1600-02	PACK,CROSSMEMBER HARDWARE
18.	1272533	17869-02	FASTENER,HUCK
19.	1272534	17869-01	FASTENER,HUCK
20.	1272535	17870	COLLAR,HUCK
21.	1272536	12927-02	WASHER,FLAT 3/4X3-1/4X3/16
22.	1272537	90313-03	LINER,DERLIN 8K
23.	1272838	90517	LINER,DERLIN 8K
24.	1272839	980120	KIT - STEER STABILIZER
25.	1272540	18080	KIT - SPINDLE ASSY
26.	1272541	17815-10	ASSY, BRAKE, LH
27.	1272542	17815-20	ASSY,BRAKE, RH
28.	1272543	18255-01	ASSY, HUB/DRUM

Watson Axle Assembly (2 of 3)

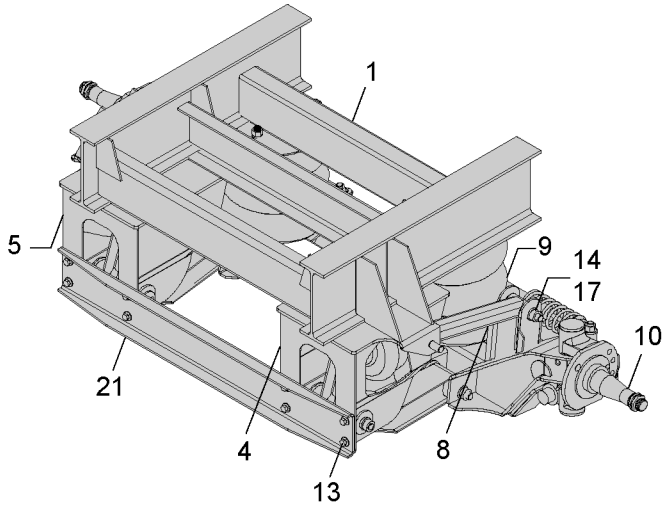

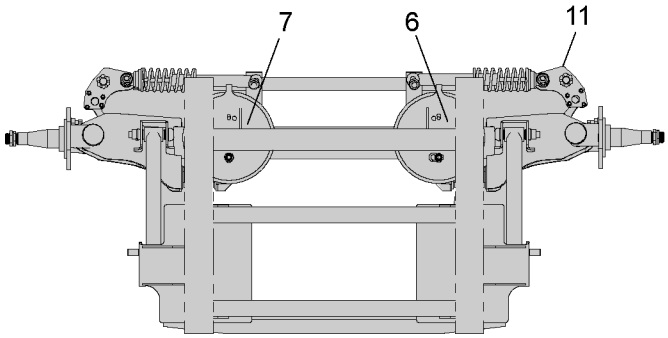

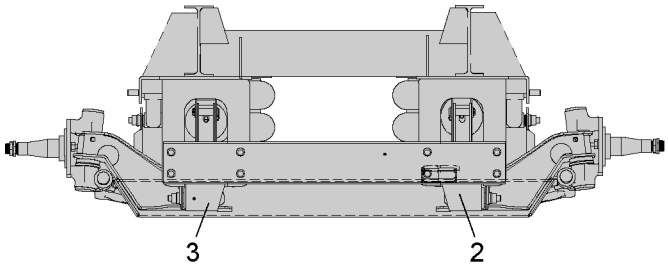

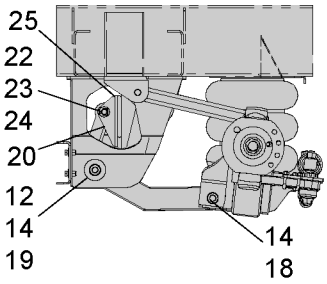

Item	MTM Part No.	Watson Part No.	Description
1.	1272486	93014112	ASSY,ARM,LH
2.	1272489	920267-20	ASSY, ARM, RH
3.	1272490	50000-11	PLATE,UPPER BAG,LH
4.	1272491	50000-12	PLATE,UPPER BAG,RH
5.	1272492	1900	ROD-TORQUE
6.	3HS768	3HS768	SPRING,AIR LOAD, 8008
7.	1272502	18040	KIT, SPINDLE ASSY
8.	1341622	980060	KIT, STEERING STABILIZER
9.	3HB773	3HB773	COLLAR, WELD
10.	1272507	16000-02	PACK,CROSSMEMBER HARDWARE
11.	1272493	16017	PACK,LW HUCK
12.	1272499	16061	PACK,HARDWARE,AIR SPRING
13.	1272498	16060	PACK,HARDWARE, LIFT BAG
14.	1272516	17012	BUSHING, TORQUE ROD
15.	8HR412	8HR412	BUSHING, HANGER PIVOT
16.	8HR413	8HR413	BUSHING,AXLE SEAT
17.	1272497	50133	PLATE,LIFT BAG
18.	1272500	90413-48	CROSSMEMBER
19.	1272508	33820	WASHER,FLATE 3/4 HARDENED
20.	1272505	12972	PIN, 3/4X3-1/2
21.	1272506	11941	PIN - COTTER
22.	1272504	AS-0058	SPRING,AIR LIFT

Watson Axle Assembly (3 of 3)

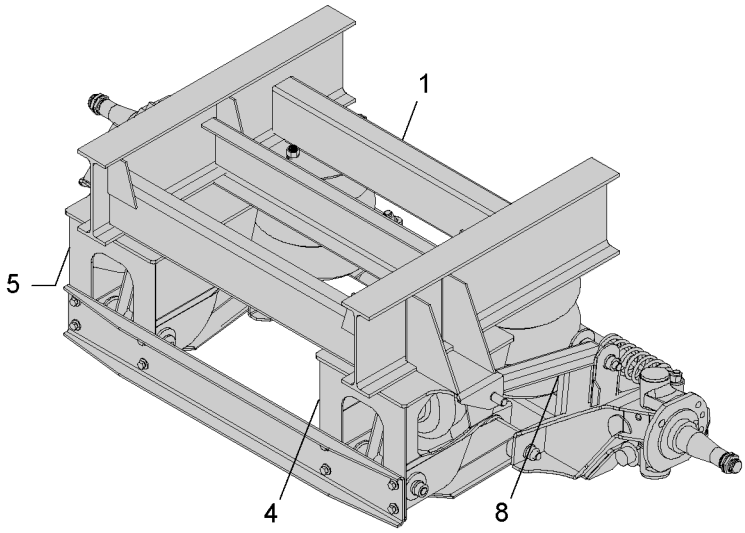

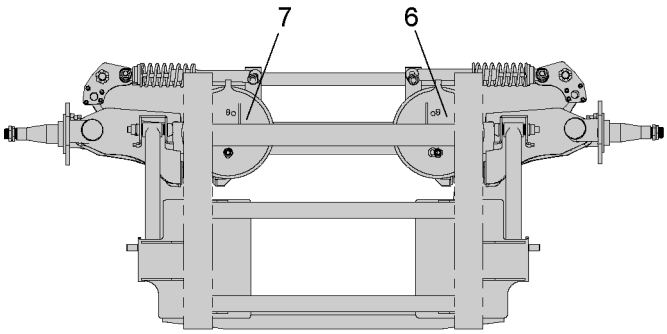

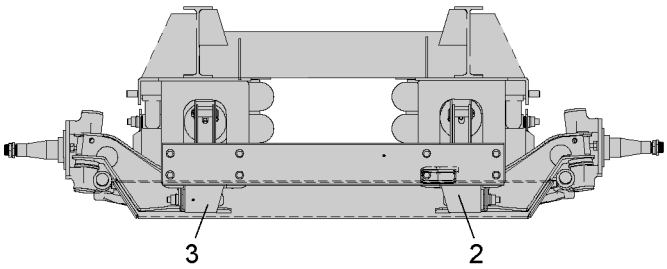

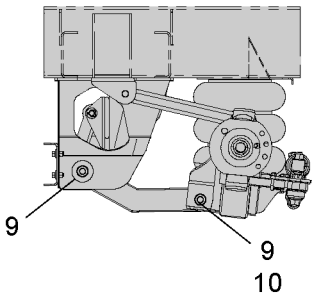

Item	MTM Part No.	Watson Part No.	Description
1.	1272486	93014112	ASSY, ARM, LH
2.	1272487	93014122	ASSY,ARM,RH
3.	1272488	9206710	ASSY,HANGER,LH
4.	1272489	9206720	ASSY,HANGER,RH
5.	1272490	5000011	PLATE,UPPER BAG,LH
6.	1272491	5000012	PLATE,UPPER BAG,RH
7.	1272492	1900	ROD, TORQUE
8.	1272493	16017	PACK,LW HUCK
9.	1272494	1293101	BUSHING,HANGER PIVOT

Westport Axle Assembly (1 of 4)

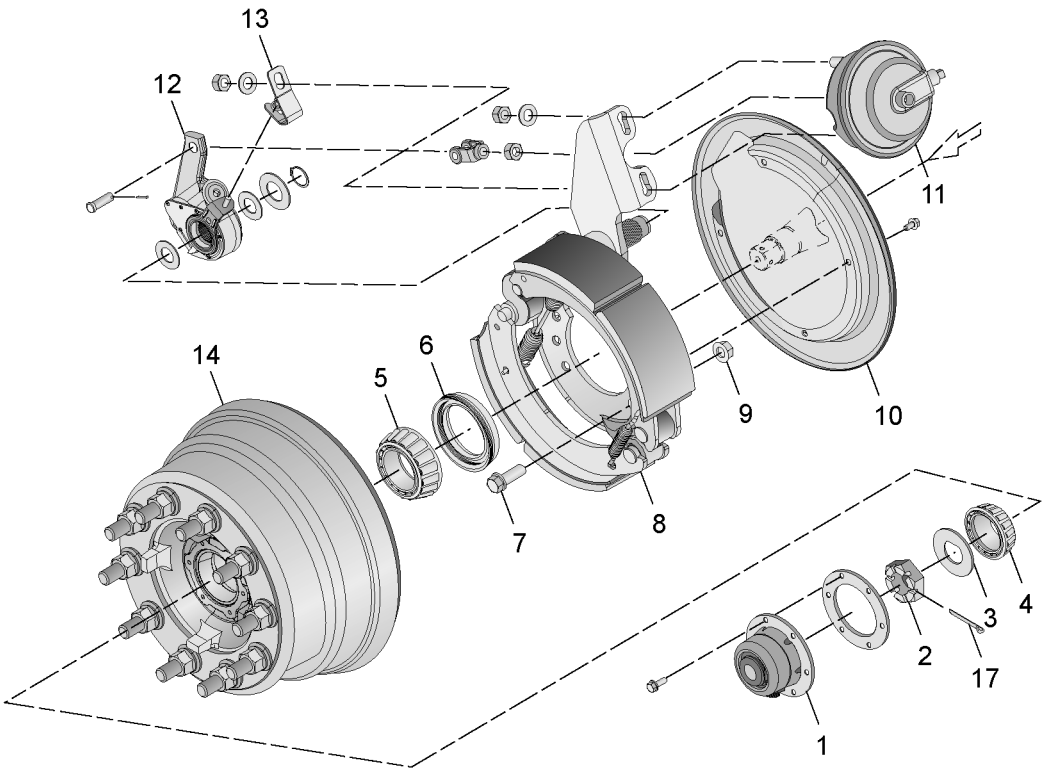

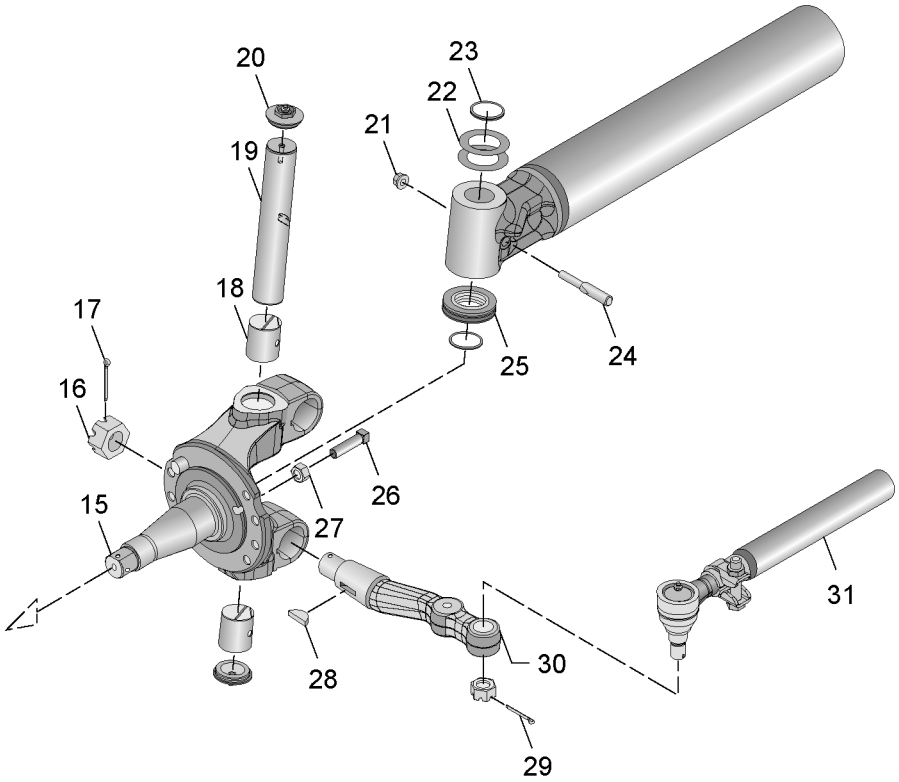

Item	MTM Part No.	Westport Part No.	Description
1.	0125066	143686-0014	HUB CAP
2.	0189933	143699-0067	WHEEL NUT
3.	0125059	143625-0004	THRUST WASHER
4.	0183113	143691-0002	BEARING - OUTER
5.	0188026	143691-0004	BEARING - INNER
6.	0188024	14390-0006	HUB OIL SEAL
7.	0188019	0143699-9424225	BOLT - BRAKE MTG
8.	0189205	143687-0195	LH BRAKE ASSY
8.	0189204	143687-0196	RH BRAKE ASSY
9.	1221682	143699-0061	NUT, BRAKE MTG
10.	0125065	143699-0109	DUST SHIELD KIT
11.	0189192	143688-0019	BRAKE CHAMBER
12.	0125060	143689-0030	SLACK ADJUSTER
13.	1221683	143699-0149	J-BRACKET
14.	0125070	143692-0159	HUB & DRUM ASSY
15.	NLA	143621-0060	KNUCKLE ASSY, LH
15.	NLA	143621-0061	KNUCKLE ASSY, RH
16.	0188012	143699-9429093	SLOTTED NUT
17.	0188014	143699-0103412	COTTER PIN
18.	0188055	143622-0001	BUSHING
19.	0188051	143660-0001	KING PIN
20.	1168923	143661-0008	KING PIN CAP
21.	0188011	143699-0062	LOCKPIN NUT
22.	0188057	143624-0001	SHIM
23.	0188054	143623-0001	SEAL
24.	0188053	143663-0001	LOCKPIN
25.	0125058	143664-0007	THRUST BEARING
26.	4HS17	143699-0211	STOP BOLT
27.	0188021	143699-0225861	NUT,STOP BOLT
28.	0188013	143699-0108627	WOODRUFF KEY
29.	1221714	143699-0113	COTTER PIN
30.	0189187	1430330-0043	TIEROD ARM LH
30.	0189188	140330-0044	TIEROD ARM RH
31.	0189189	143640-0036	TIEROD ASSY
	1140308	143699-0163	BOLT
	0189193	143699-0164	SPACER
	1221715	143699-0115	LOCKNUT

Westport Axle Assembly (2 of 4)

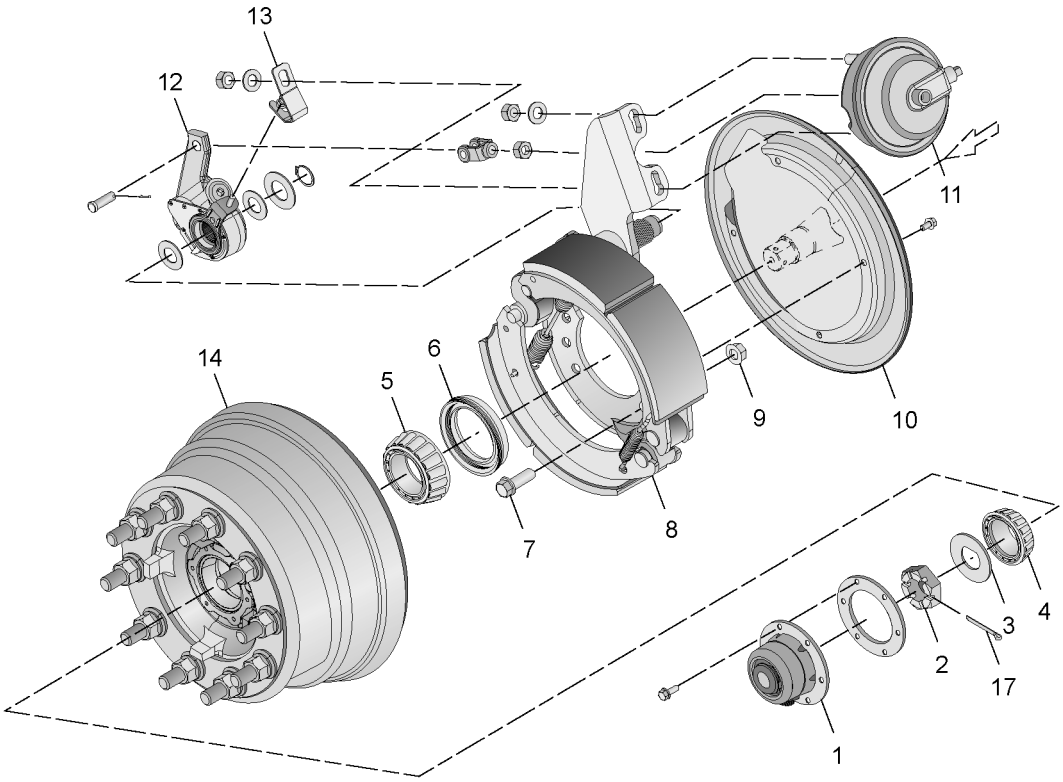

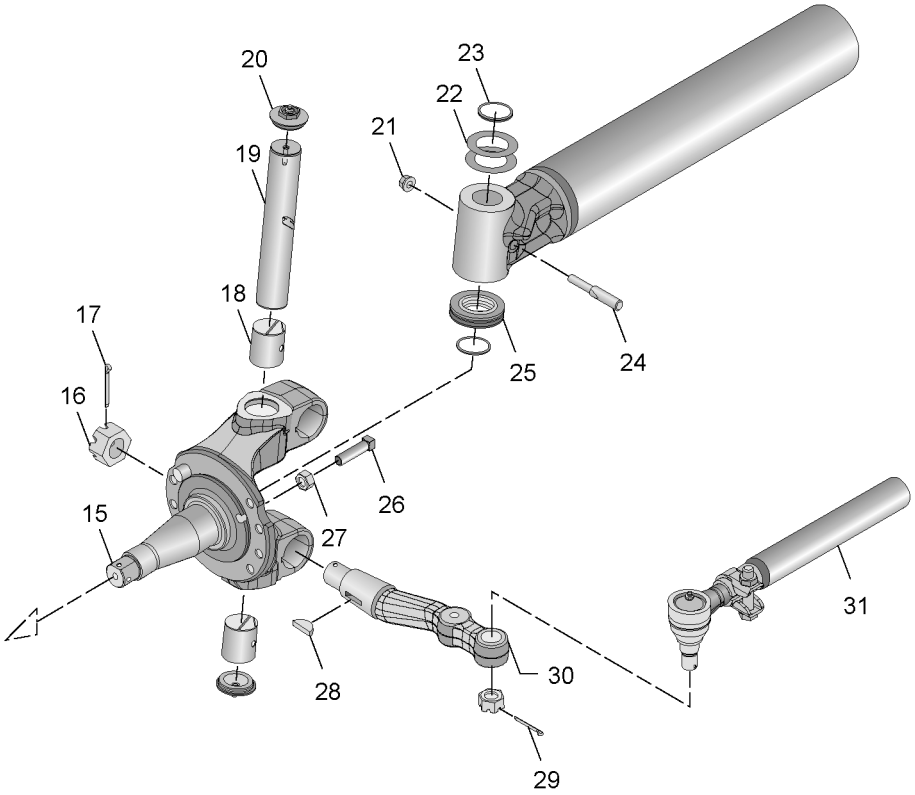

Item	MTM Part No.	Westport Part No.	Description
1.	0125066	143686-0014	HUB CAP
2.	0189933	143699-0067	WHEEL NUT
3.	0125059	143625-0004	THRUST WASHER
4.	0183113	143691-0002	BEARING - OUTER
5.	0188026	143691-0004	BEARING - INNER
6.	0188024	14390-0006	HUB OIL SEAL
7.	0188019	0143699-9424225	BOLT - BRAKE MTG
8.	0189205	143687-0276	LH BRAKE ASSY
8.	0189204	143687-0277	RH BRAKE ASSY
9.	1221682	143699-0061	NUT, BRAKE MTG
10.	0125605	143699-0109	DUST SHIELD KIT
11.	0189192	143688-0019	BRAKE CHAMBER
12.	0125060	143689-0030	SLACK ADJUSTER
13.	1221683	143699-0149	J-BRACKET
14.	1221722	143692-0179	HUB & DRUM ASSY,LH
14.	NLA	143692-0180	HUB & DRUM ASSY,RH
15.	NLA	143621-0061	KNUCKLE ASSY, LH
15.	NLA	143621-0060	KNUCKLE ASSY, RH
16.	0188012	143699-9429093	SLOTTED NUT
17.	0188014	143699-0103412	COTTER PIN
18.	0188055	143622-0001	BUSHING
19.	0188051	143660-0001	KING PIN
20.	1168923	143661-0008	KING PIN CAP
21.	0188011	143699-0062	LOCKPIN NUT
22.	0188057	143624-0001	SHIM
23.	0188054	143623-0001	SEAL
24.	0188053	143663-0001	LOCKPIN
25.	0125058	143664-0007	THRUST BEARING
26.	4HS17	143699-0211	STOP BOLT
27.	0188021	143699-0225861	NUT,STOP BOLT
28.	0188013	143699-0108627	WOODRUFF KEY
29.	1221714	143699-0113	COTTER PIN
30.	0189187	1430330-0043	TIEROD ARM LH
30.	0189188	140330-0044	TIEROD ARM RH
31.	0189189	143640-0036	TIEROD ASSY
	1140308	143699-0163	BOLT
	0189193	143699-0164	SPACER
	1221715	143699-0115	LOCKNUT

Westport Axle Assembly (3 of 4)

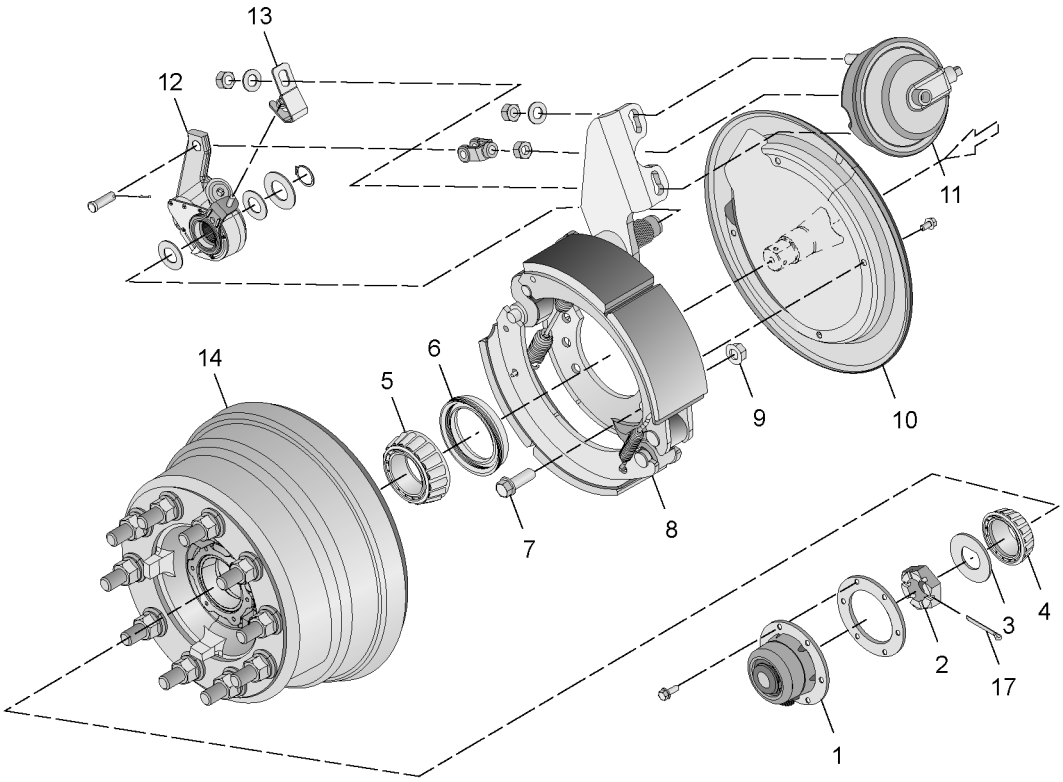

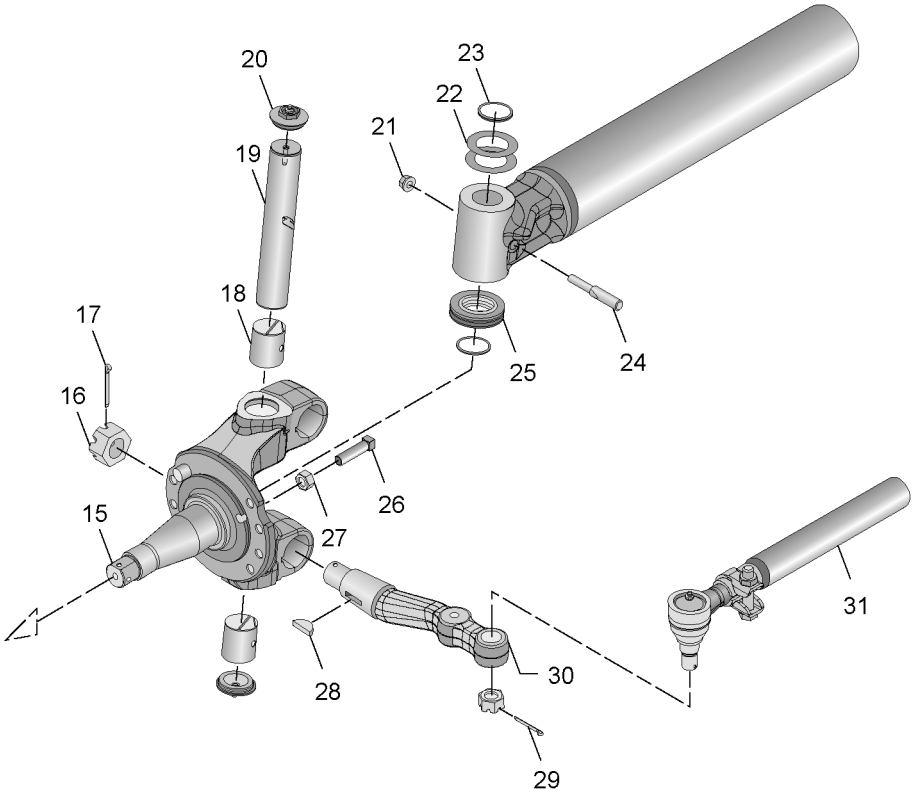

Item	MTM Part No.	Westport Part No.	Description
1.	0125066	143686-0014	HUB CAP
2.	0189933	143699-0067	WHEEL NUT
3.	0125059	143625-0004	THRUST WASHER
4.	0183113	143691-0002	BEARING - OUTER
5.	0188026	143691-0004	BEARING - INNER
6.	0188024	14390-0006	HUB OIL SEAL
7.	0188019	0143699-9424225	BOLT - BRAKE MTG
8.	0189205	143687-0195	LH BRAKE ASSY
8.	0189204	143687-0196	RH BRAKE ASSY
9.	1221682	143699-0061	NUT, BRAKE MTG
10.	0125065	143699-0109	DUST SHIELD KIT
11.	0189192	143688-0019	BRAKE CHAMBER
12.	0125060	143689-0030	SLACK ADJUSTER
13.	1221683	143699-0149	J-BRACKET
14.	1221680	143692-0178	HUB & DRUM ASSY
15.	NLA	143621-0060	KNUCKLE ASSY, LH
15.	NLA	143621-0061	KNUCKLE ASSY, RH
16.	0188012	143699-9429093	SLOTTED NUT
17.	0188014	143699-0103412	COTTER PIN
18.	0188055	143622-0001	BUSHING
19.	0188051	143660-0001	KING PIN
20.	1168923	143661-0008	KING PIN CAP
21.	0188011	143699-0062	LOCKPIN NUT
22.	0188057	143624-0001	SHIM
23.	0188054	143623-0001	SEAL
24.	0188053	143663-0001	LOCKPIN
25.	0125058	143664-0007	THRUST BEARING
26.	4HS17	143699-0211	STOP BOLT
27.	0188021	143699-0225861	NUT,STOP BOLT
28.	0188013	143699-0108627	WOODRUFF KEY
29.	1221714	143699-0113	COTTER PIN
30.	0189187	1430330-0043	TIEROD ARM LH
30.	0189188	140330-0044	TIEROD ARM RH
31.	0189189	143640-0036	TIEROD ASSY
	1140308	143699-0163	BOLT
	0189193	143699-0164	SPACER
	1221715	143699-0115	LOCKNUT

Westport Axle Assembly (4 of 4)

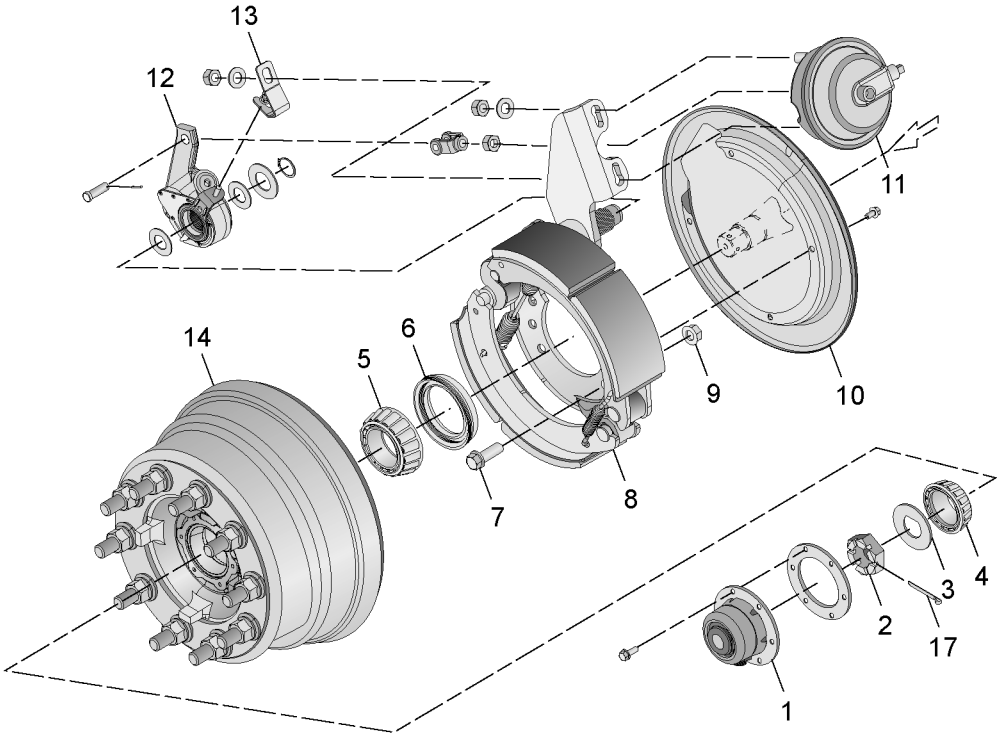

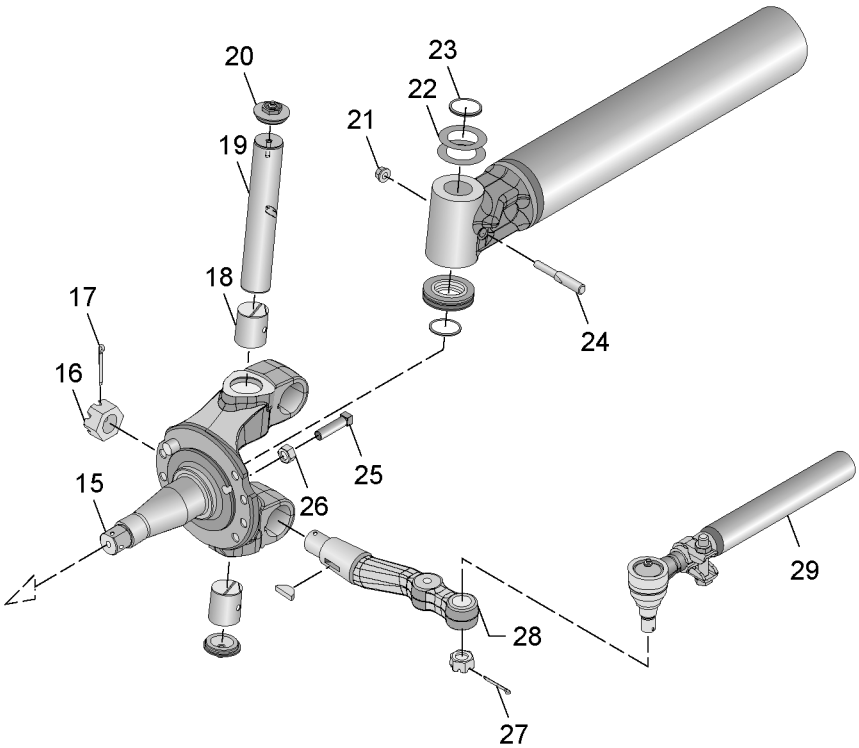

Item	MTM Part No.	Westport Part No.	Description
1.	0125066	143686-0014	HUB CAP
2.	0189933	143699-0067	WHEEL NUT
3.	0125059	143625-0004	THRUST WASHER
4.	0183113	143691-0002	BEARING OUTER
5.	0188026	143691-0004	INNER BEARING
6.	0188024	143690-0006	HUB OIL SEAL
7.	0188019	143699-9424225	BOLT - BRAKE MTG
8.	0125027	143687-0193	BRAKE ASSY, LH
8.	0125028	143687-0194	BRAKE ASSY, RH
9.	1221682	143699-0061	NUT-BRAKE MTG
10.	0125065	143699-0109	DUST SHIELD KIT
11.	0189192	143688-0019	BRAKE CHAMBER
12.	0125060	143689-0030	SLACK ADJUSTER
13.	1221683	143699-0149	J-BRACKET
14.	1221680	143692-0178	HUB & DRUM ASSY
15.	0125025	143621-0046	KNUCKLE ASSY, LH
15.	0125026	143621-0047	KNUCKLE ASSY, RH
16.	0188012	143699-9429093	SLOTTED NUT
17.	0188014	143699-0103412	COTTER PIN
18.	0188055	143622-0001	BUSHING
19.	0188051	143660-0001	KING PIN
20.	1168923	143698-0008	CAP
21.	0188011	143699-0062	LOCKPIN NUT
22.	0188057	143624-0001	SHIM
23.	0188054	143623-0001	SEAL
24.	0188053	143663-0001	LOCKPIN
25.	4HS17	143699-0211	STOP BOLT
26.	0188021	143699-0225861	NUT-STOP BOLT
27.	1221714	143699-0113	COTTER PIN
28.	NLA	140330-0024	TIEROD ARM LH
28.	NLA	140330-0025	TIEROD ARM RH
29.	0125057	143640-0022	TIEROD ASSY
	0125072	143640-0005	TIEROD END LH
	0125071	143640-0004	TIEROD END RH1.

THIS PAGE INTENTIONALLY LEFT BLANK

Cylinders

ADVANCE / TEREX

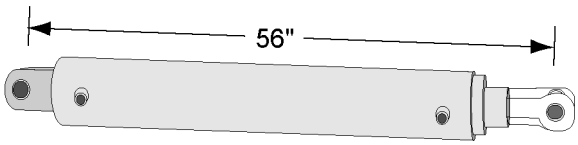

CYLINDER - BMIII, 2.25”

1459907 MTM 40424 TEREX

BOOT - CYLINDER, SEAL SAVER, KEVLAR

0107577 MTM

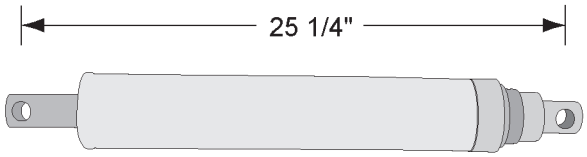

CYLINDER - LIFT, CHUTE

1139838 MTM 40423 TEREX

0107596 MTM 40423 TEREX

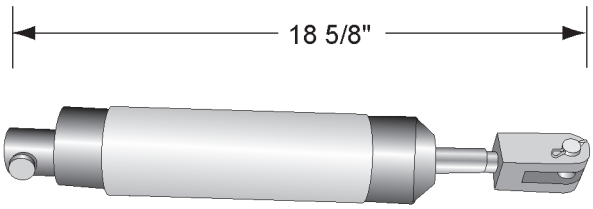

CYLINDER - HOPPER

1331056 MTM 24061 TEREX

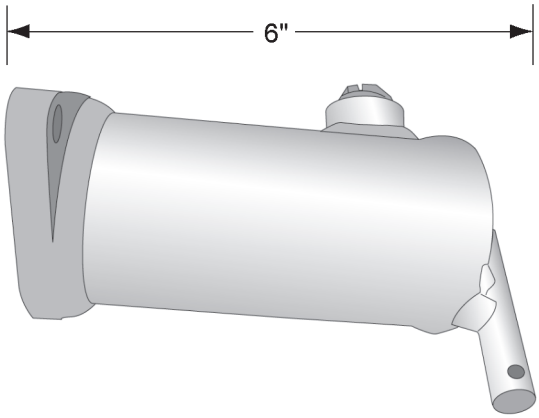

CYLINDER - LATCH

1146363 MTM 41345 TEREX

CCB

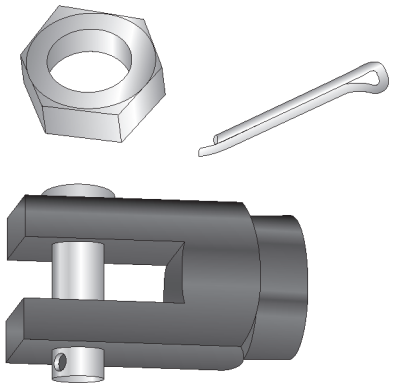

KIT - CLEVIS AND PIN

0014422 MTM 5043558 CCB

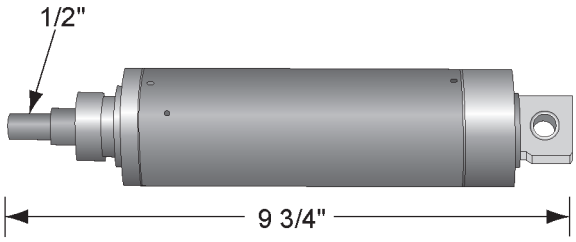

CYLINDER - AIR, 2” X 2”

0016980 MTM 1540467 CCB

CYLINDER - 2” x 20”, w/PCFC, CHA

0017097 MTM 1540008 CCB

CYLINDER - 2-1/2” x 20”, w/PCFC, CHA

0017098 MTM 1540302 CCB

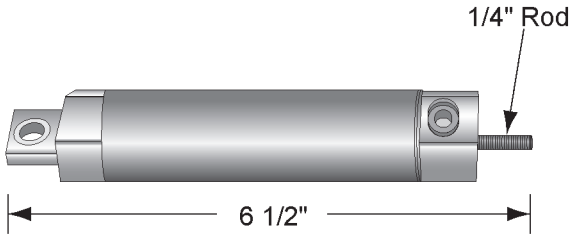

CYLINDER - AIR, 1 1/8”X2 3/8”

0015878 MTM 1540175 CCB

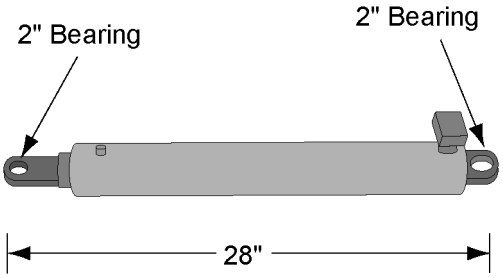

CYLINDER - CHA BAL, 2” BRG

0016418 MTM 1540356 CCB

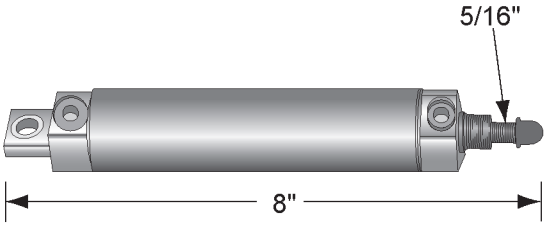

CYLINDER - AIR, F6 SPECIAL

0013354 MTM 1540466 CCB

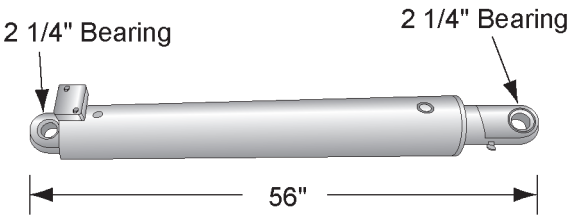

CYLINDER - CHA BAL, 2.25” BRG

0016397 MTM 1540436 CCB

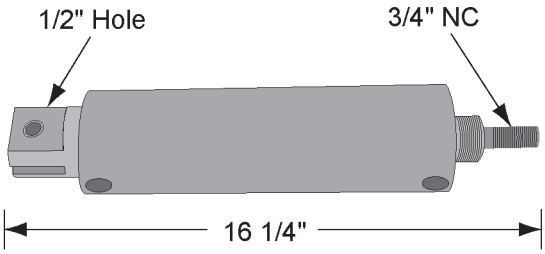

CYLINDER - HOPPER, 3” X 8”

0014969 MTM 1540433 CCB

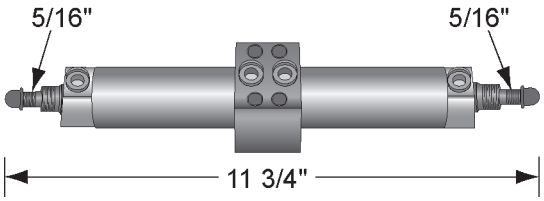

CYLINDER - AIR, 2” STROKE

0013820 MTM 1540460 CCB

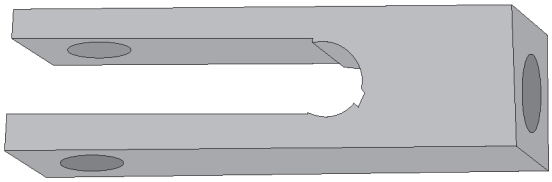

CYLINDER - AIR, CLEVIS 5/8”

0014398 MTM 5041944 CCB

CBMW

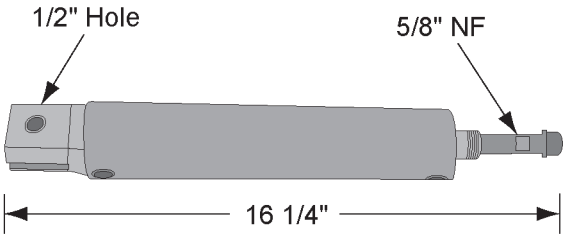

CYLINDER - HOPPER, 2” X 8”

0014745 MTM 1540266 CC

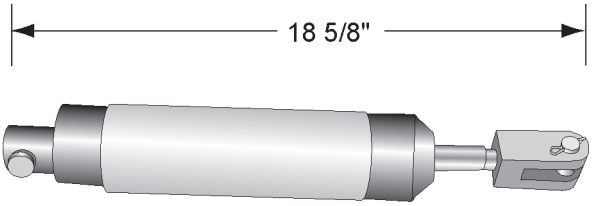

CYLINDER - AIR, HOPPER UP, 2.5” X 8”

0107616 MTM 80151692 CBMW

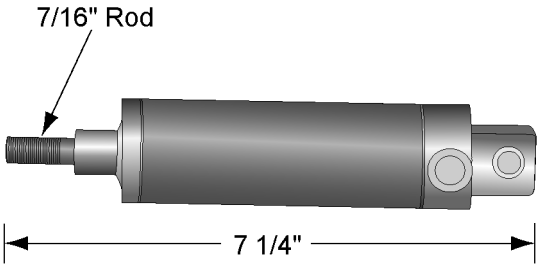

CYLINDER - AIR, 1 1/2” STROKE

0015876 MTM 1540456 CCB

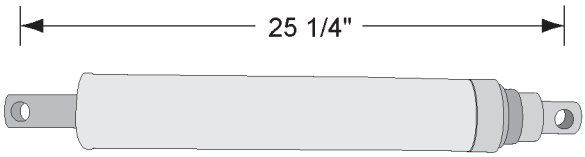

CYLINDER - CHUTE, 3/4” DBL ACTG

1363580 MTM 90253214 CBMW

CYLINDER

1459907 MTM 90251200 CBMW

CYLINDER - BM

1362142 MTM H41-10013-00 KIMBLE

KIMBLE

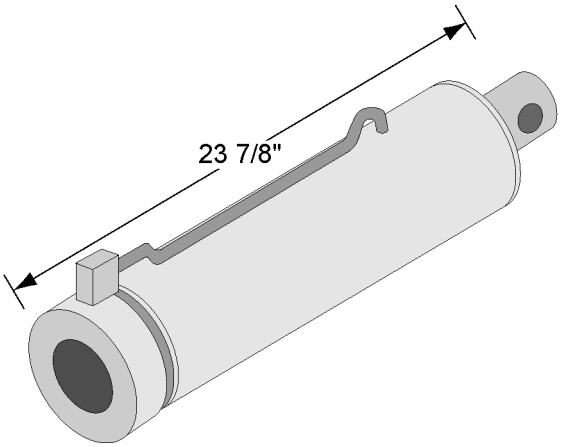

CHUTE LIFT CYLINDER - 2 1/2" X 18 1/8" X 1 1/2"

1329520 MTM H42-10011-00 KIMBLE

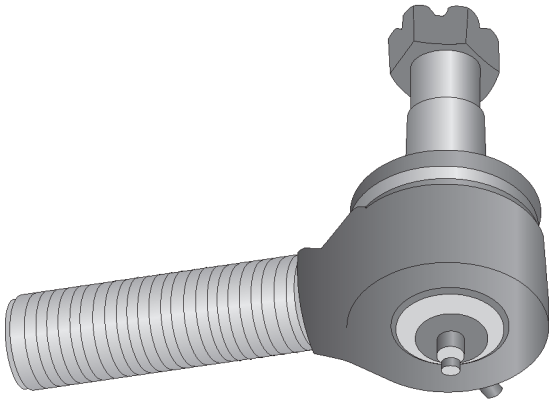

LINK ASSY - DRAG, CHUTE CYLINDER

1KS15 MTM S220A047 KIMBLE

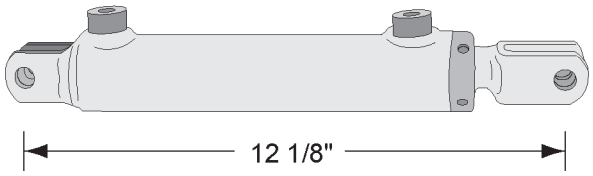

CYLINDER - HOPPER

1331133 MTM H43-10010-00 KIMBLE

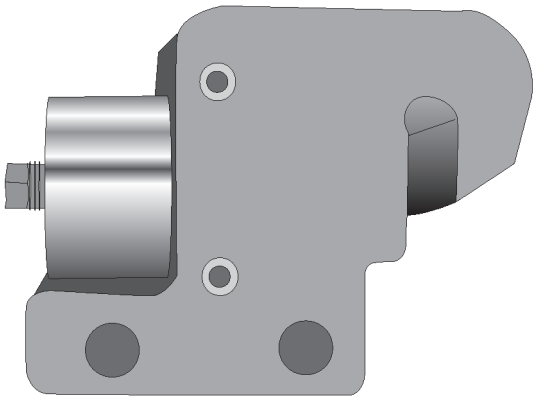

CYLINDER - LOCK, CHUTE PIVOT, OLD STYLE

1333764 MTM H42-20010-00 KIMBLE

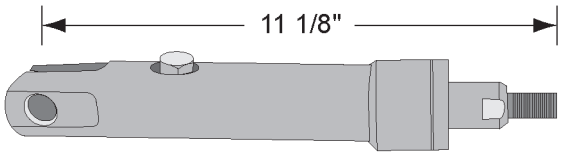

CYLINDER - LATCH, AXLE

1331134 MTM H41-10100-00 KIMBLE

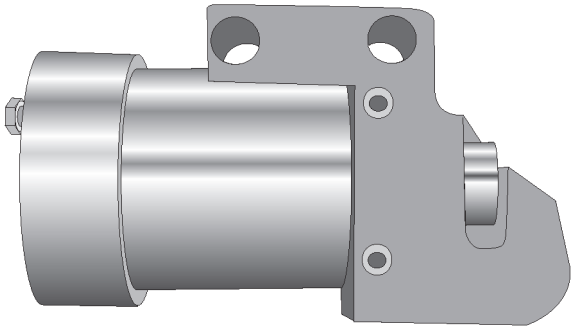

CYLINDER - LOCK, CHUTE PIVOT, NEW STYLE

1333566 MTM H42-20021-02 KIMBLE

LONDON

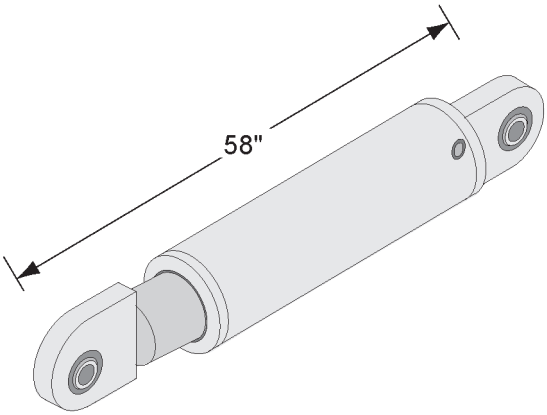

CYLINDER - BOOSTER

1256046 MTM MD-40422 LONDON

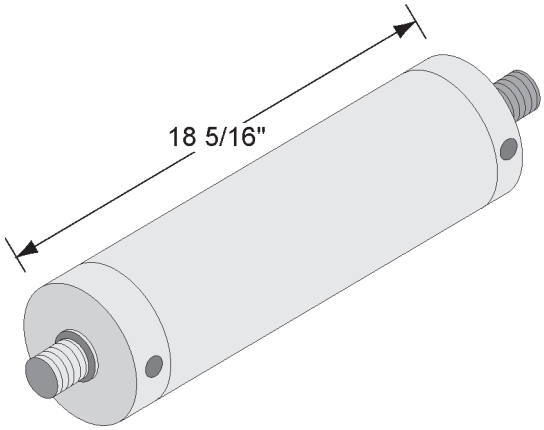

CYLINDER - TILT, HOPPER

1255594 MTM MB-38614 LONDON

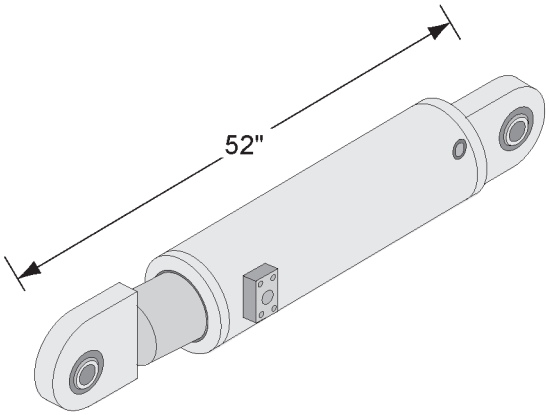

CYLINDER - TAG AXLE, REBUILT

1256032 MTM MD-37287R LONDON

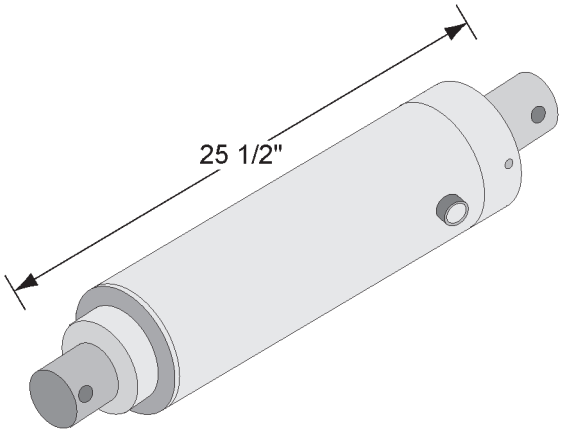

CYLINDER - LIFT, CHUTE

1255593 MTM MB-38576 LONDON

MTM

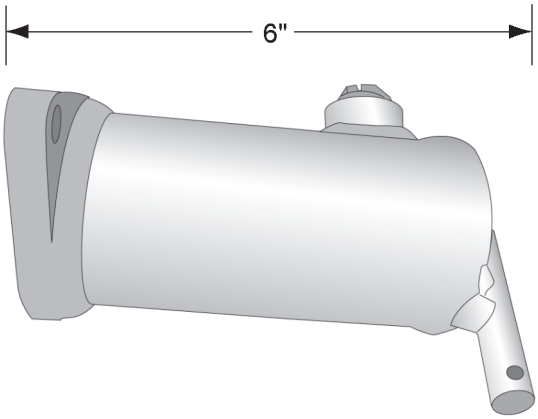

CYLINDER - LATCH, 2” x 1-1/4” x 2”

1146363 MTM

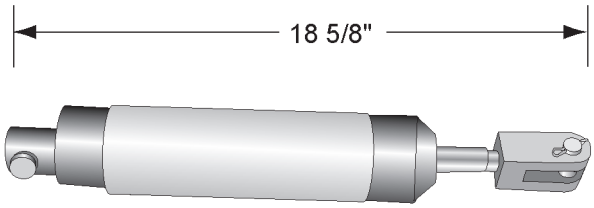

CYLINDER - AIR, HOPPER UP, 2.5” X 8”

0107616 MTM

BOOT - CYLINDER, SEAL SAVER, KEVLAR

1228075 MTM

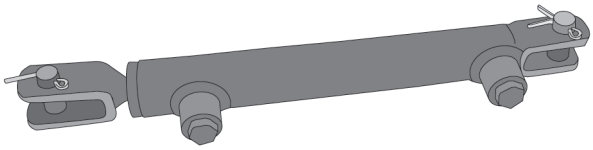

CYLINDER - SM FC w/PINS, MSC-1006

0082322 MTM

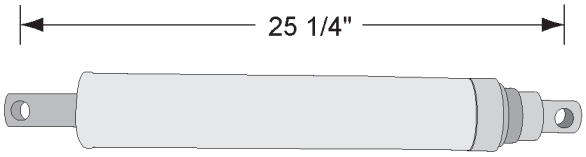

CYLINDER - CHUTE, 7/8”, DBL ACTG

1139838 MTM

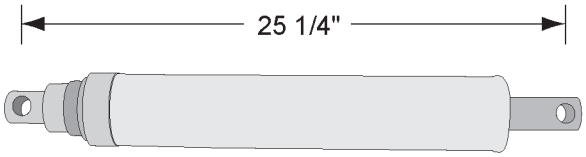

CYLINDER - CHUTE, 7/8”, SNGL ACTG

1139840 MTM

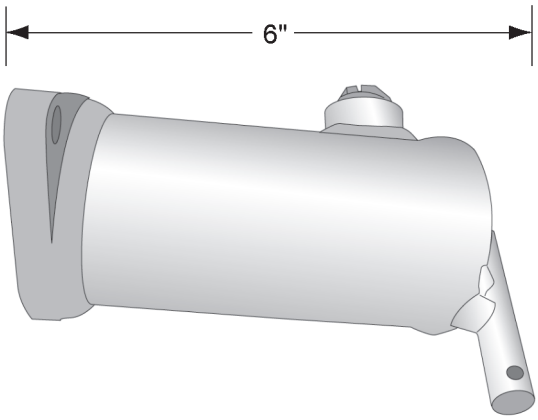

CYLINDER - LATCH, 2” X2 1/2” X 1 1/4”

1146364 MTM

REX

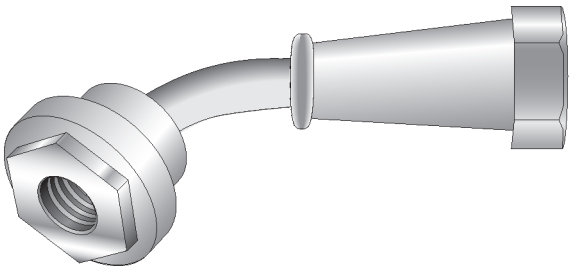

ELBOW - FITTING, F/ACCUM CHARGE KIT

0085456 MTM

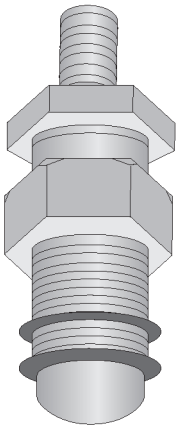

VALVE - ACCUM CHG

0085886 MTM

KIT - ACCUMULATOR, CHG

0085455 MTM

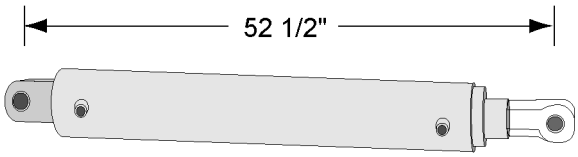

CYLINDER-4 1/2" X 6" X 32 "

1419184 MTM

BOOT - CYLINDER, SEAL SAVER, KEVLAR

0107577 MTM

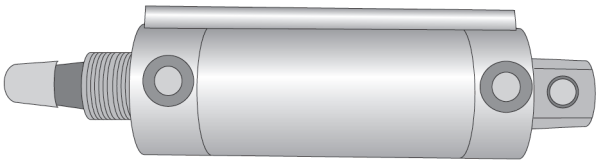

CYLINDER - AIR

1113063 MTM 298-50362-01 REX

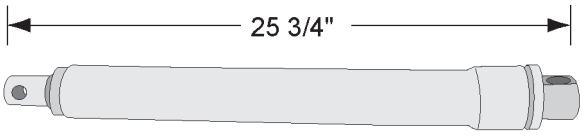

CYLINDER - RAM NK3, 2" DIA SPOUT

1112846 MTM 102-10174-01 REX

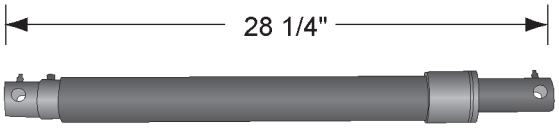

CYLINDER, LIFT, CHUTE, NO FLOW FUSE

0046558 MTM 102-50362-01 REX

CYLINDER - HOPPER, REX

1113058 MTM 307-03014-01 REX

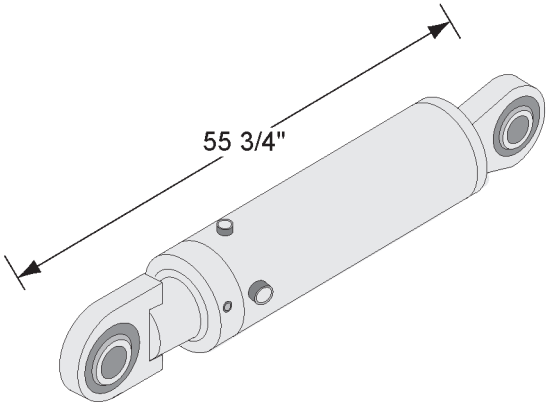

CYLINDER - TAG AXLE, BM

1113096 MTM 102-13274 REX

CYLINDER - AIR, DIRECTIONAL CONTROL

1112994 MTM 102-08687-01 REX

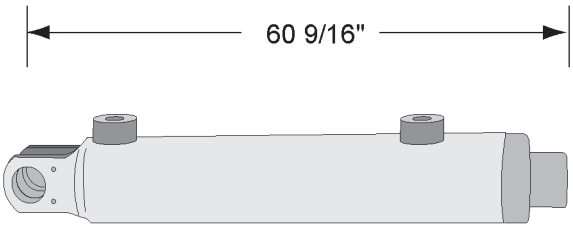

CYLINDER - BOOSTER

1141081 MTM 102-31415 REX

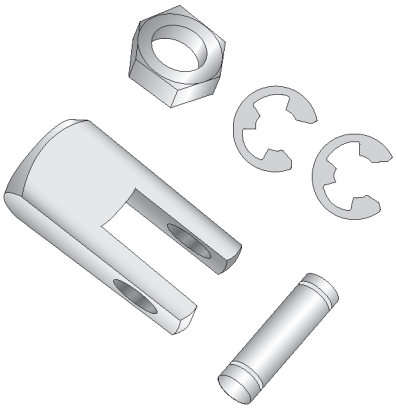

CLEVIS - PISTON, ROD REX

1113057 MTM 307-00045-47 REX

CYLINDER - AIR, DIRECTIONAL CONTROL

1112792 MTM 298-03041-01 REX

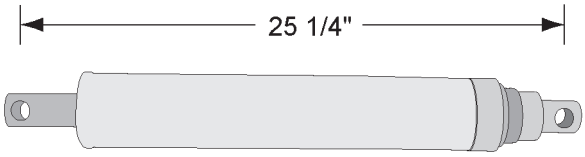

CYLINDER - LIFT, CHUTE

1139838 MTM 30369145 SCHWING

No Image Available

CYLINDER - BM V, 2”

1419184 MTM

SCHWING

CYLINDER - REBUILT, BM

1459907 MTM 30389131 SCHWING

BOOT - CYLINDER, SEAL SAVER, KEVLAR

0107577 MTM

Front Pedestal Components

CBMW

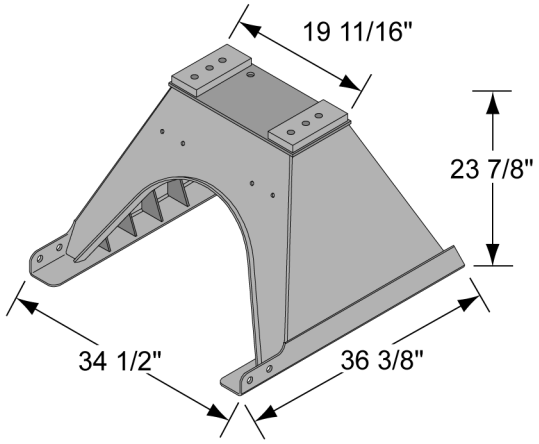

WELDMENT - FRONT PEDESTAL

1332314 MTM 90611300 CBMW

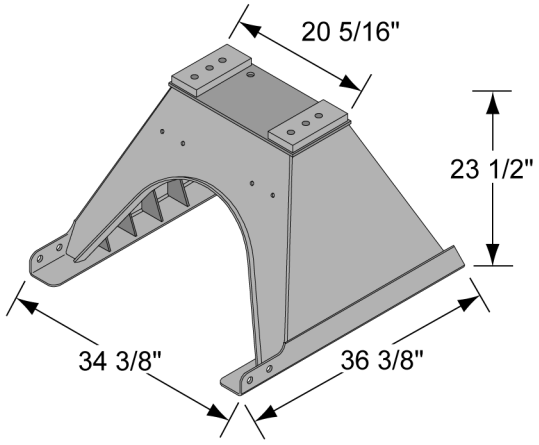

WELDMENT - FRONT PEDESTAL

NPN CBMW

KIMBLE

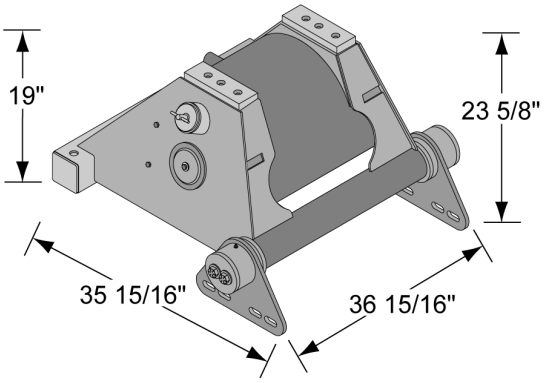

FRONT PEDESTAL - W/HYD.TANK

1358243 MTM S04-4000BD0-00 KIMBLE

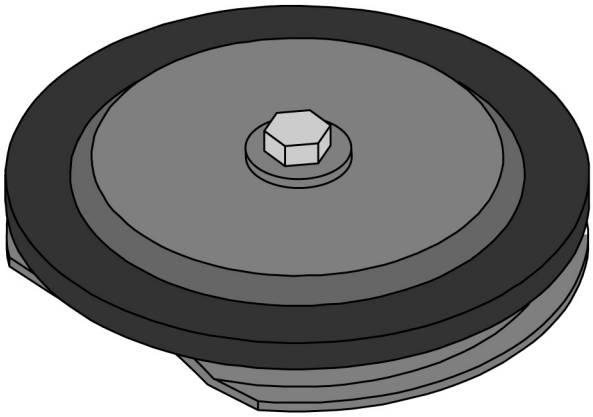

CAP - 6.00, HYD RES, F PED

1341488 MTM H92-01917-06 KIMBLE

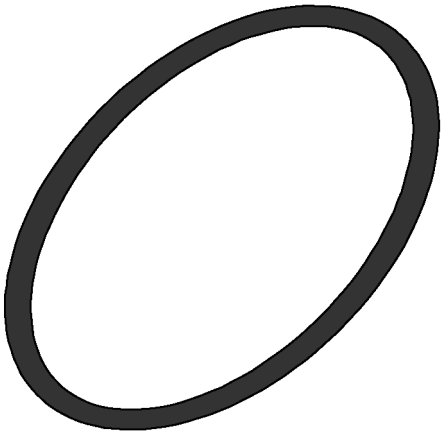

O-RING - HYD RES, F PED

1341493 MTM H70-19438-00 KIMBLE

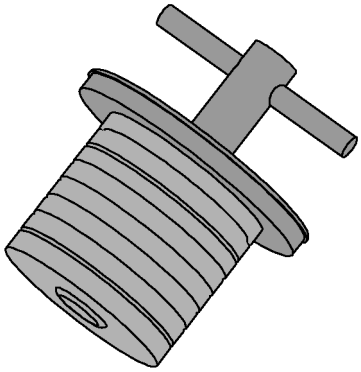

PLUG - T, HYD RES, F PED

1341491 MTM NPN KIMBLE

MTM

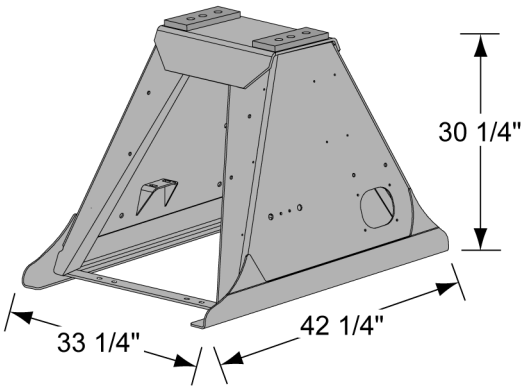

PED - FRT, 10YD-11YD, 33.25", 3/16"

1101360 MTM

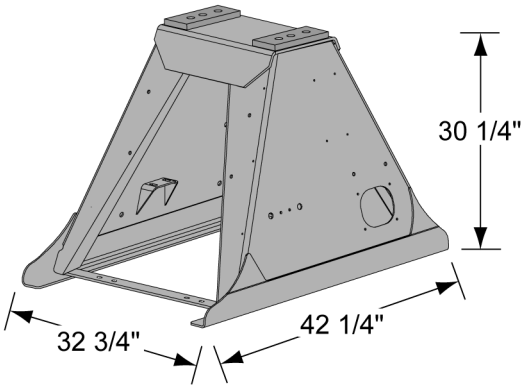

PED - FRT, 10YD-11YD, 32.75", 3/16"

1101362 MTM

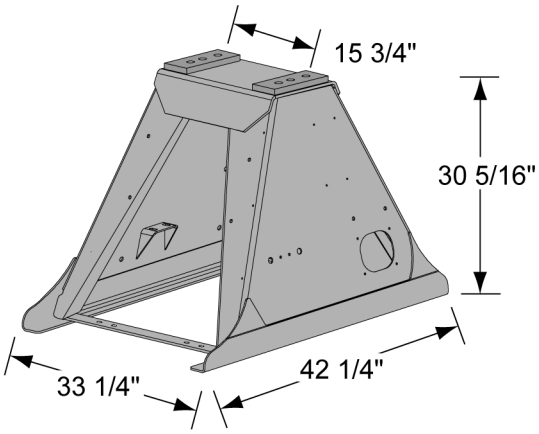

PED - FRT, 10YD-11YD, 33.25",1/4"

1101361 MTM

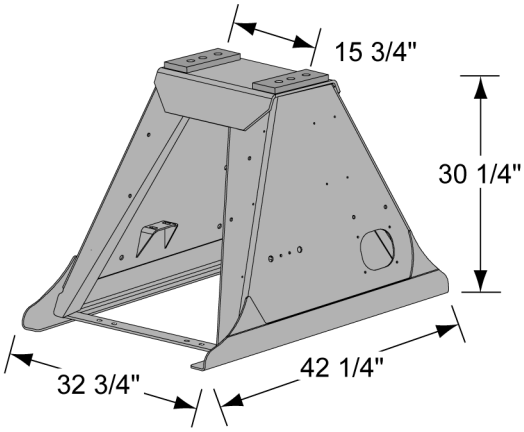

PED - FRT, 10YD-11YD, 32.75", 1/4"

1101363 MTM

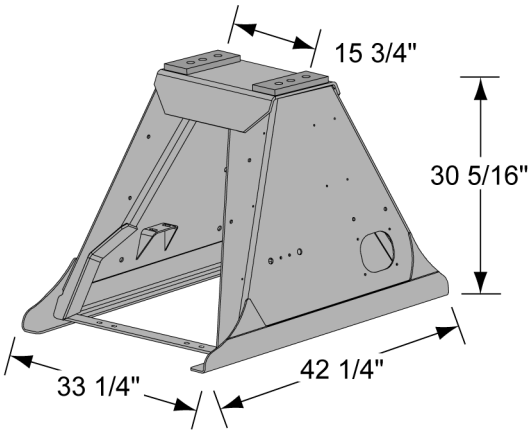

PED - FRT, 10-11YD, WIDE, NOTCH, 1/4"

1102207 MTM

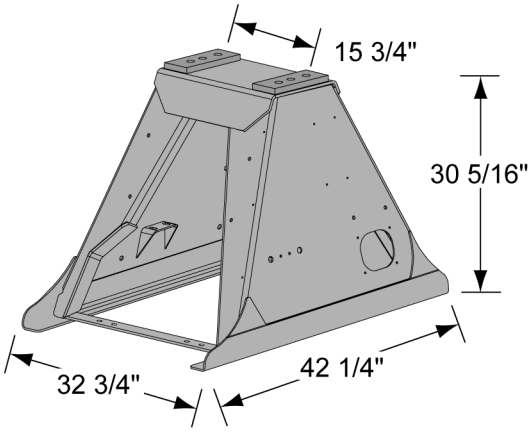

PED - FRT, 10-11YD, NARO, NOTCH, 1/4"

1251238 MTM

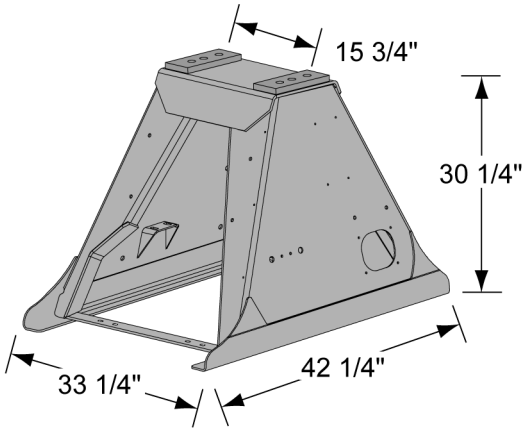

PED - FRT, 10-11YD, WDE, NOTCH, 3/16”

1102208 MTM

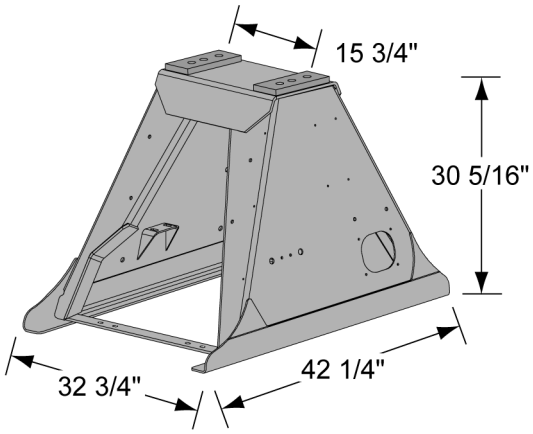

PED - FRT, 10-11YD, NARO, NOTCH, 3/16”

1251240 MTM

No Image Available

PRE 1993 FRONT PED

0150050 MTM

THIS PAGE INTENTIONALLY LEFT BLANK

THIS PAGE INTENTIONALLY LEFT BLANK

Rear Pedestal Components

ADVANCE / TEREX

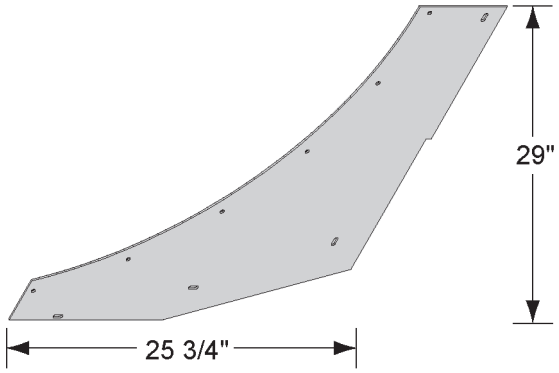

COVER -ROLLER, REAR

1327733 MTM 40820 ADV

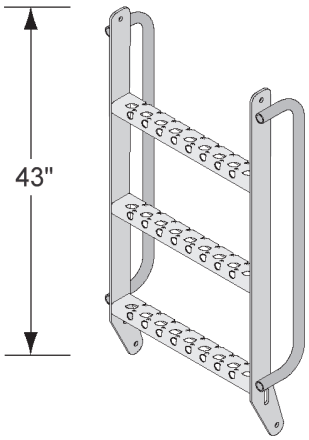

LADDER ASSY - UPPER

1327737 MTM 40139 TEREX

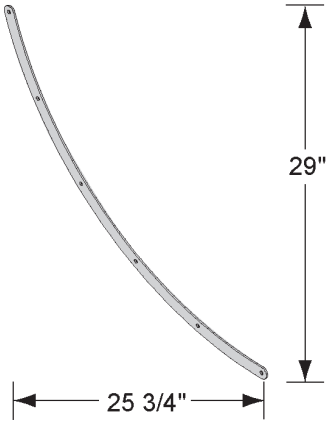

STRAP - ROLLER, REAR

1327734 MTM 23747 ADV

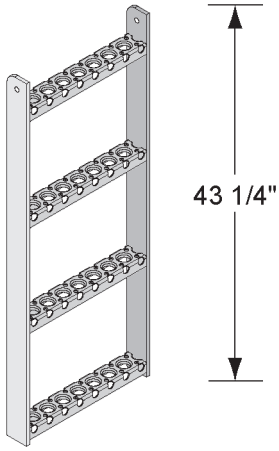

LADDER ASSY - LOWER

1327736 MTM 40324 TEREX

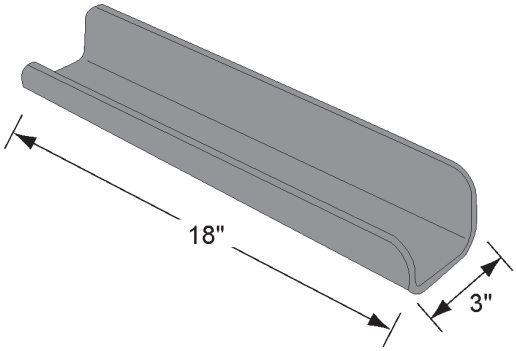

HOPPER - SUPPORT, LH

1105288 MTM 41238 ADV

HOPPER - SUPPORT, RH

1105287 MTM 41239 ADV

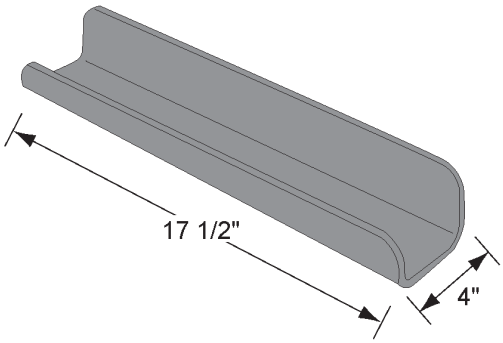

HOPPER - SUPPORT, PAVER, LH

1105290 MTM 40988 ADV

HOPPER - SUPPORT, PAVER, RH

1105289 MTM 40989 ADV

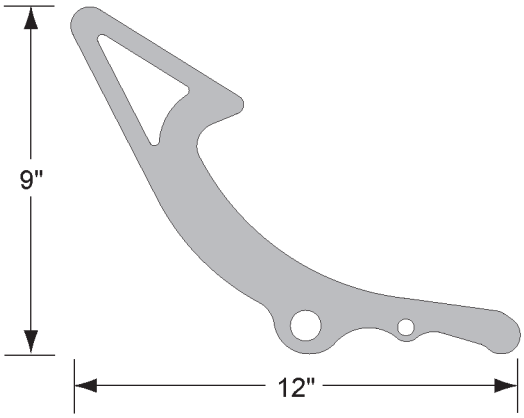

HOOK - LATCH

1104551 MTM 40442 ADV

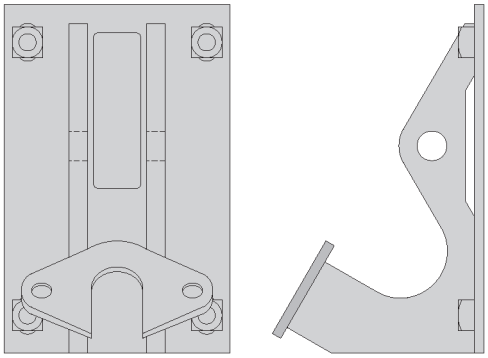

BRACKET - HOOK, LATCH, BMV

1104548 MTM 40436 ADV

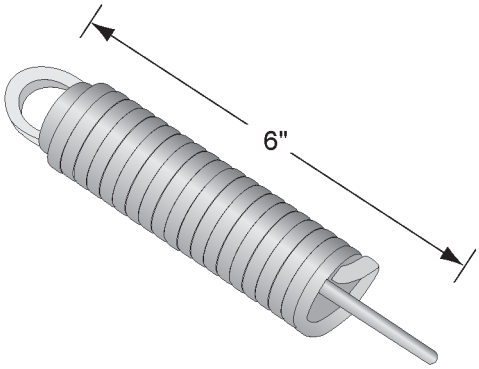

SPRING - HOOK, LATCH

1104668 MTM 40435 ADV

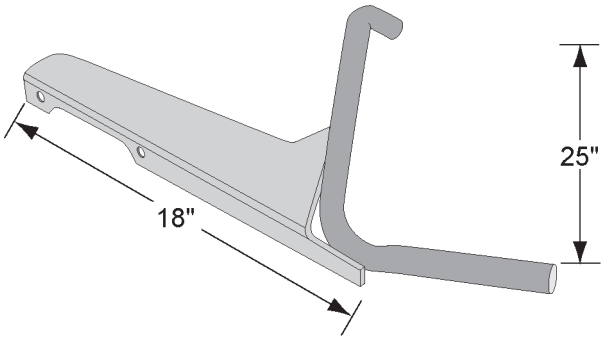

PIPE - WATER, INJECTION

0153525 MTM 40391 ADV

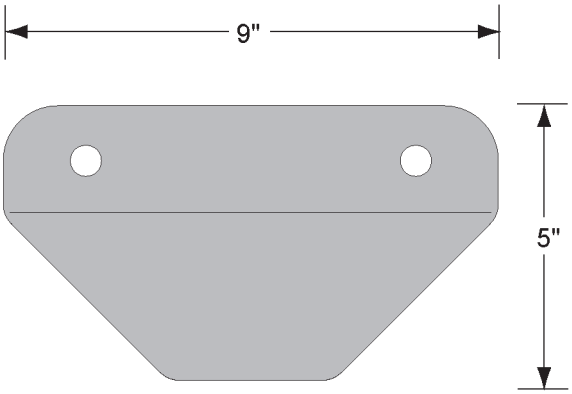

PLATE - DEBOUNCER

0153574 MTM 4036 TEREX

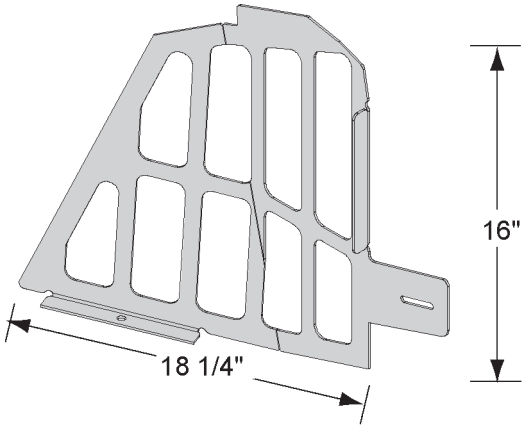

GUARD - WASHOUT, STANDARD

1105770 MTM 40975 ADV

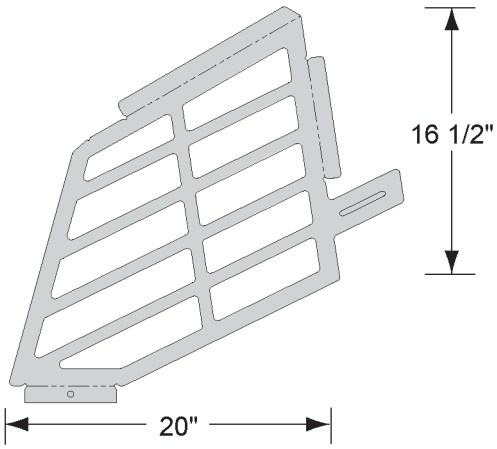

GUARD - WASHOUT, STANDARD

1106794 MTM 40375 ADV

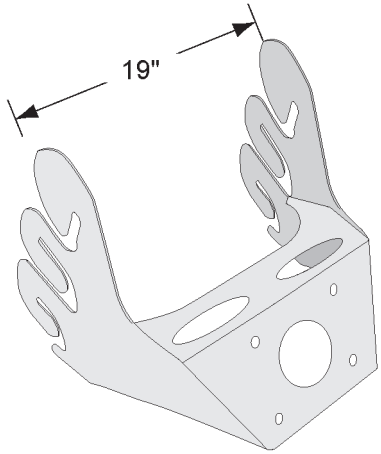

HANGER - VERTICAL, 3 CHUTE

1503879 MTM 40285 ADV

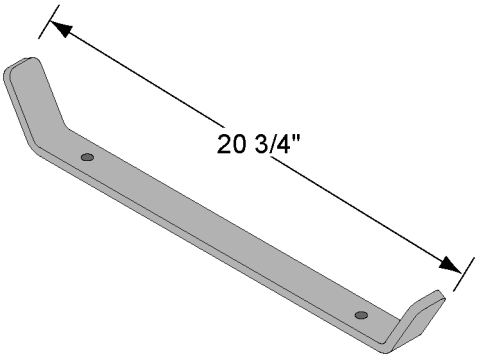

SUPPORT - HANGER, CHUTE

0150359 MTM 40288 ADV

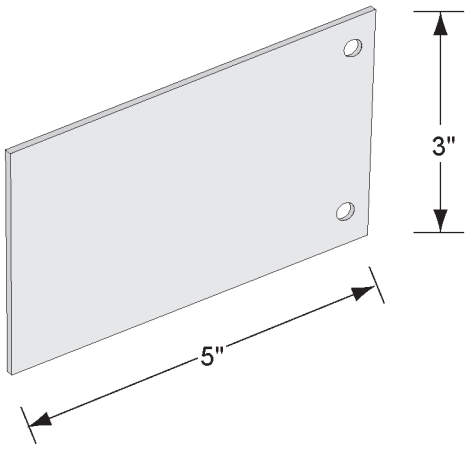

PAD - STOP, TRAILER AXLE, 3/4”

0189058 MTM 40188 ADV

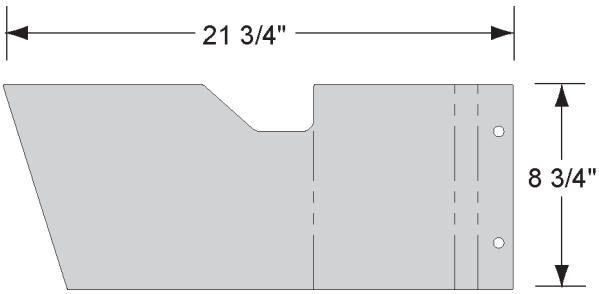

GUARDS - DEBRIS, LH

1238037 MTM 40191 ADV

GUARDS - DEBRIS, RH

1238010 MTM 40190 ADV

CHUTE - CABLE

30” 1169354 MTM 40289 ADV

39” 1169355 MTM 41428 ADV

47” 1169356 MTM 40293 ADV

No Image Available

SHIM - DEBOUNCER, 1/4”

1170169 MTM 40367 TEREX

SHIM - DEBOUNCER, 3/8”

1170170 MTM

CBMW

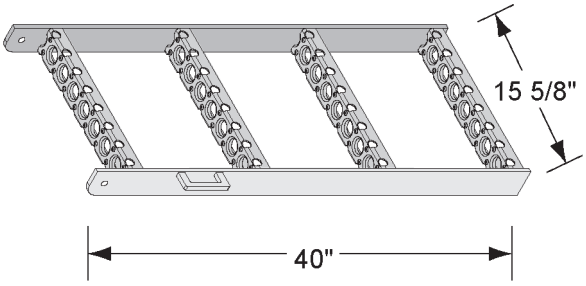

LADDER - LOWER

1329716 MTM 90602412 CBMW

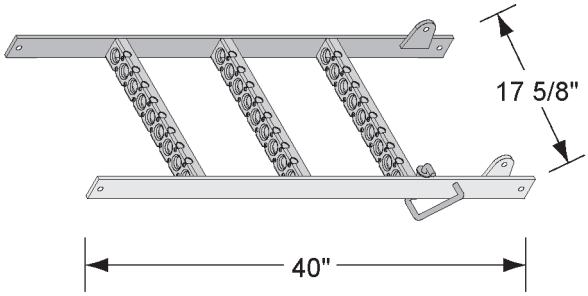

LADDER - UPPER

1329715 MTM 90602411 CBMW

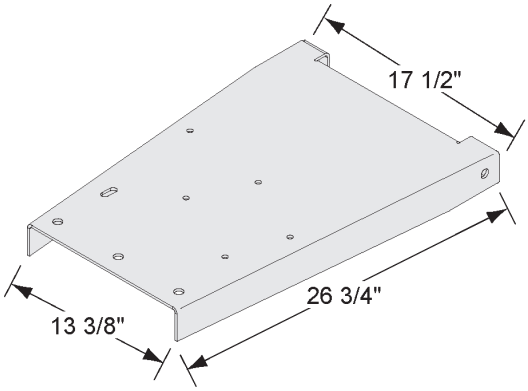

PLATFORM - LOWER

1329456 MTM 90602404 CBMW

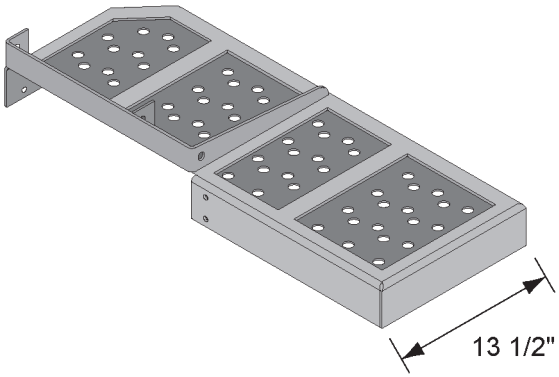

PLATFORM - UPPER, LADDER

1330106 MTM 90602503 CBMW

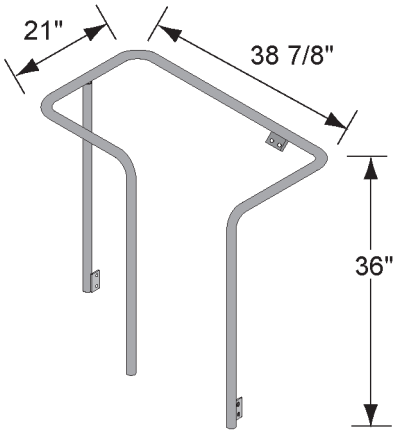

HANDRAIL - UPPER, LADDER

1330105 MTM 90602505 CBMW

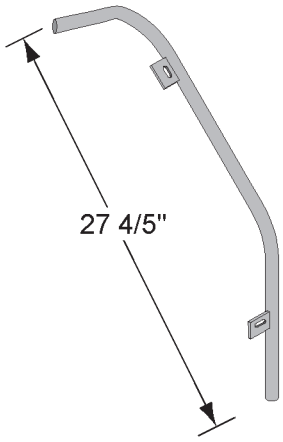

PIPE - WATER INJECTION ASSY, 2000

1332160 MTM 90105415 CBMW

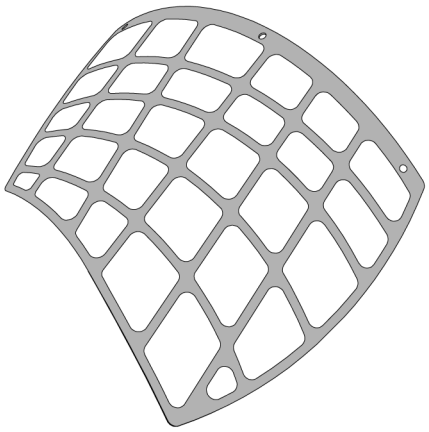

GUARD - WASHOUT< CBMW

1332108 MTM 90601911 CBMW

CCB

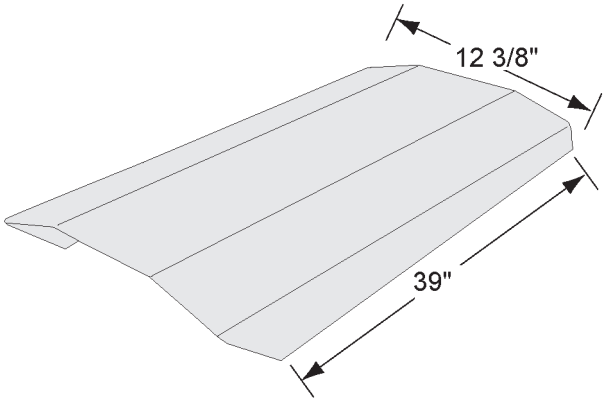

SUPPORT - HOPPER

0012620 MTM 5040593 CCB

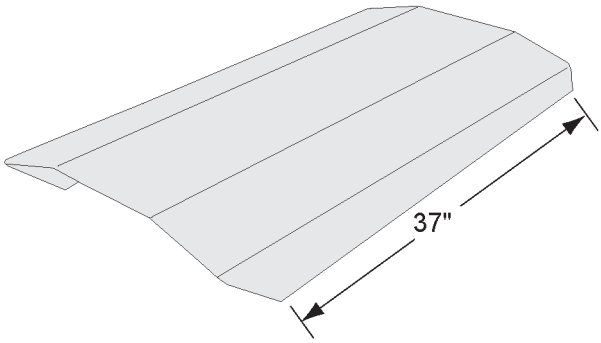

SUPPORT - HOPPER

0012190 MTM 5042017 CCB

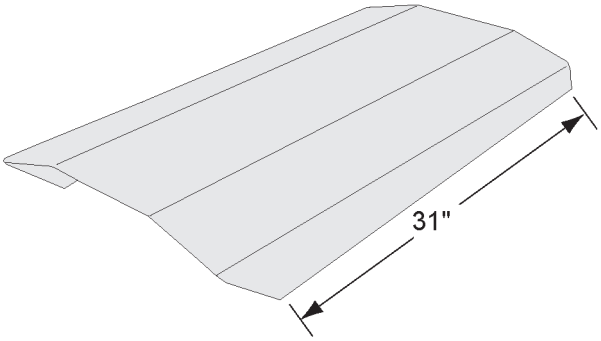

SUPPORT - HOPPER

0012561 MTM 5041233 CCB

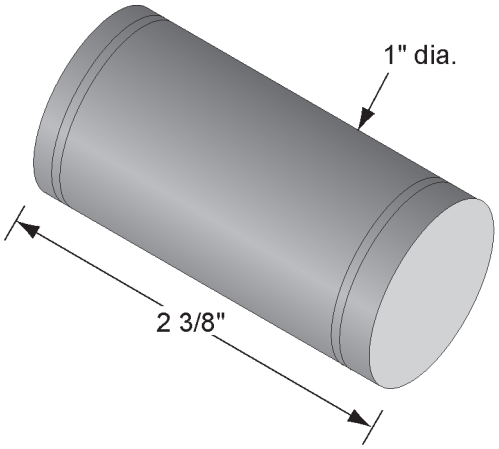

PIN - HOOK, TRAILER

0016458 MTM 5050879 CCB

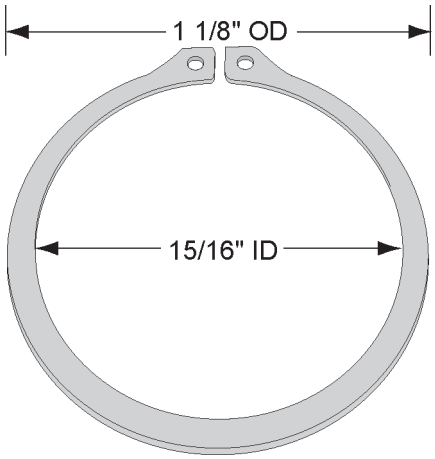

RING - SNAP, 1”

0016467 MTM 1050015 CCB

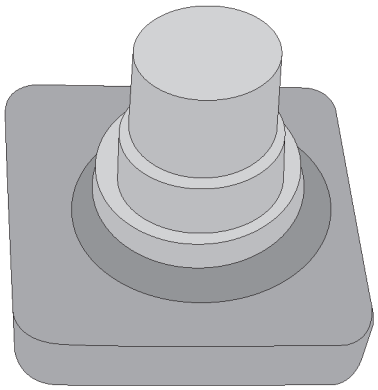

MOUNT - HOOD, TRAILER

0015643 MTM 5028235 CCB

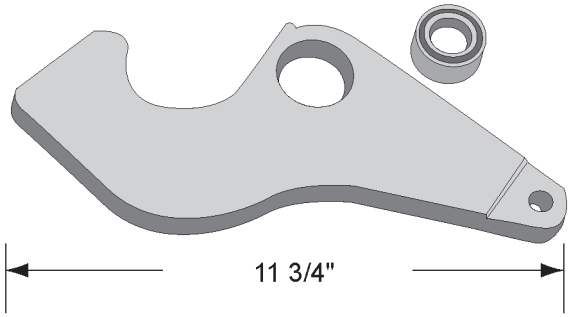

HOOK - BAL

0015147 MTM 5028230 CCB

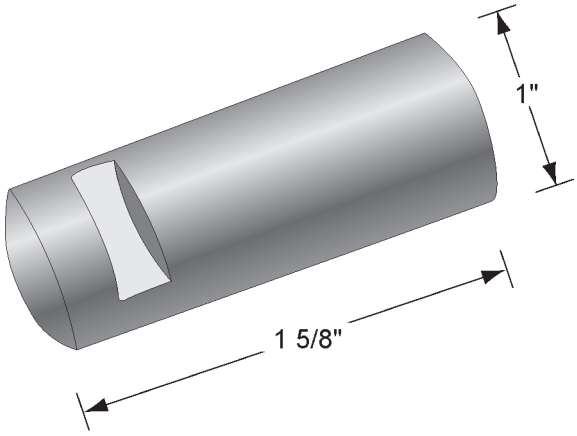

PIN - BALANCE, W/SLOT

0012596 MTM 5028231 CCB

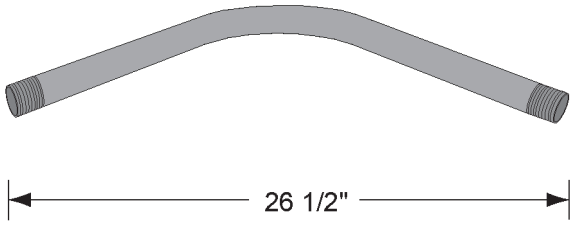

PIPE - DRUM LINE, LOADSTAR

0015222 MTM 5055145 CCB

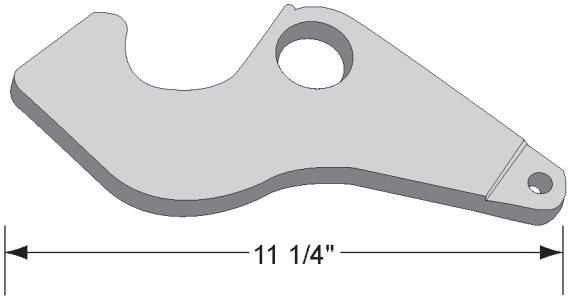

HOOK - BAL, TRAILER, 1/2”

0015662 MTM 5054930 CCB

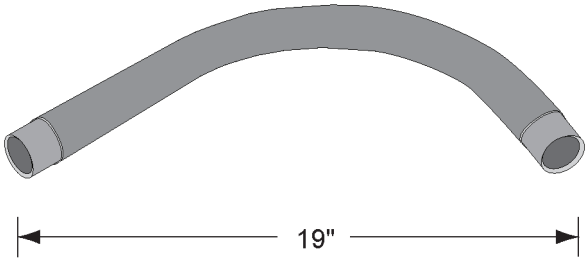

PIPE - WATER, UPRIGHT

0010041 MTM 5051833 CCB

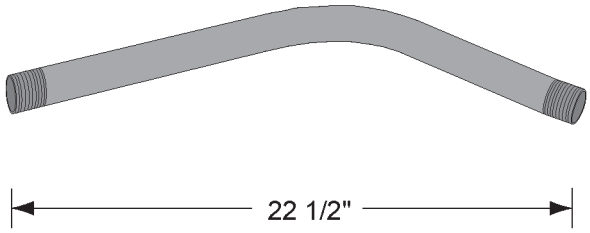

PIPE - BENT

0015210 MTM 5051720 CCB

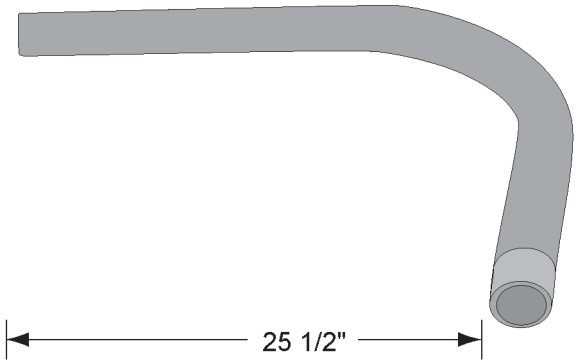

PIPE - WATER

0010037 MTM 5051772 CCB

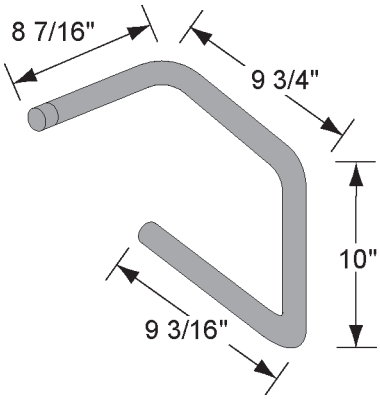

PIPE - WATER, DRUM LINE

0015664 MTM 5051667 CCB

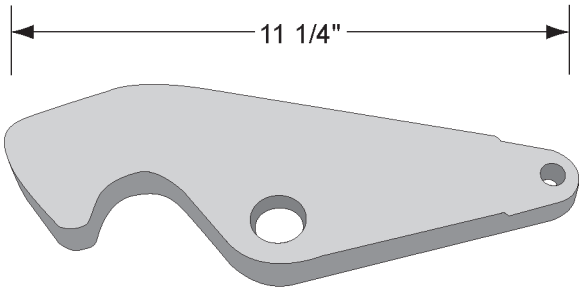

HOOK - BALANCE, TRAILER, 3/4"

0016384 MTM 5052060 CCB

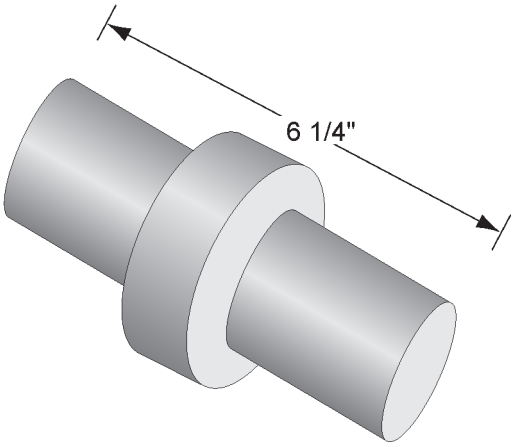

BAR - LOCK, BALANCE HOOK

0016657 MTM 5042465 CCB

KIMBLE

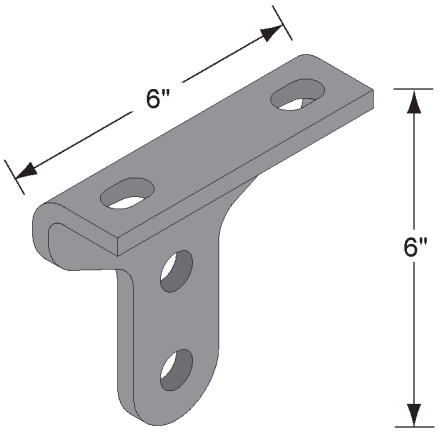

BRACKET - LATCH CYLINDER

1331252 MTM S03-00BB0-00 KIMBLE

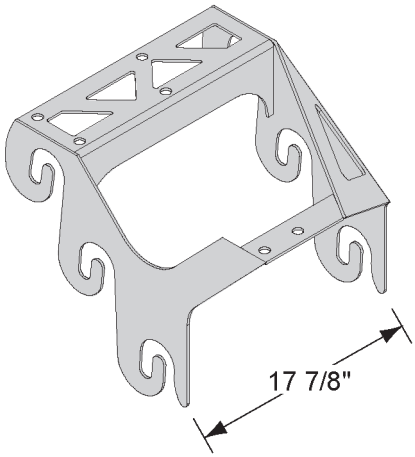

HANGER - 3 CHUTE, NARO

1330918 MTM S03-00BF0-00 KIMBLE

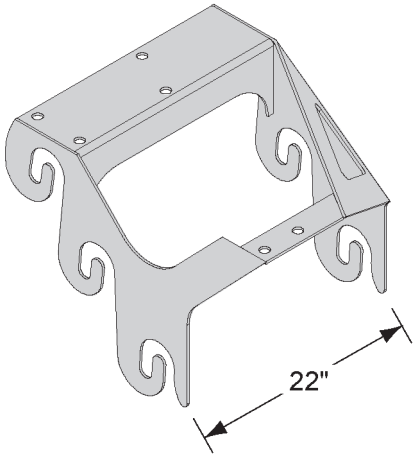

HANGER - 3 CHUTE

1330859 MTM S03-00CC00-00 KIMBLE

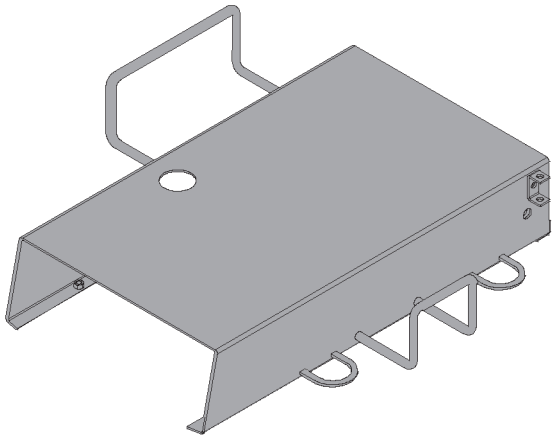

PLATFORM ASSY - LOWER LADDER. B/M

1331260 MTM S07-000K0-00 KIMBLE

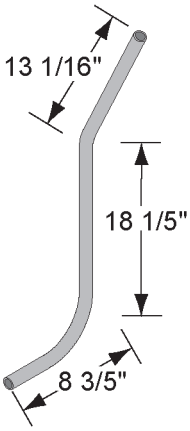

PIPE - WATER, INJECTION

1331303 MTM S03-03440-00 KIMBLE

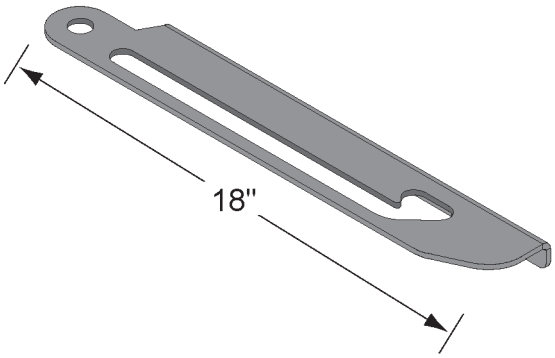

BRACKET - LADDER, SLIDE, BRG, RH

1331261 MTM S07-00200-02 KIMBLE

BRACKET - LADDER, SLIDE, BRG, LH

1331262 MTM S07-00200-01 KIMBLE

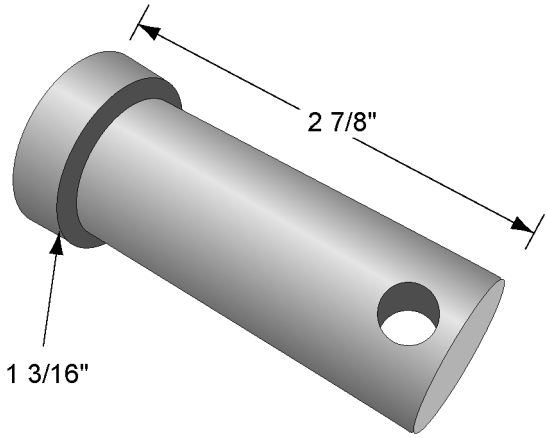

PIN - CLEVIS, 1" X 2 1/2"

1168636 MTM C64-98250-00 KIMBLE

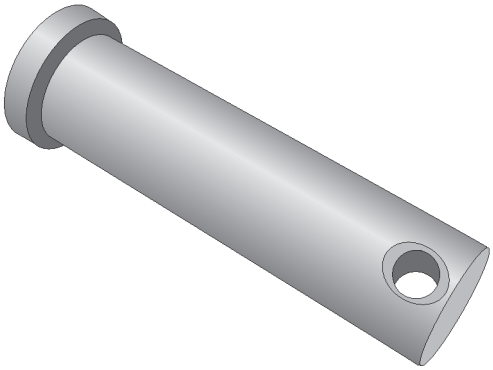

PIN - CLEVIS, 1/2" X 1 3/4"

0115283 MTM C64-75200-00 KIMBLE

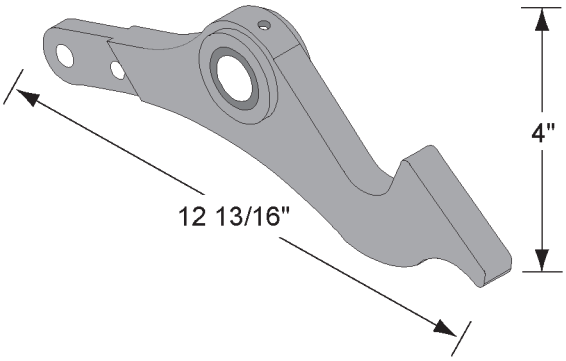

LATCH ASSY

1334469 MTM S09-01590-00 KIMBLE

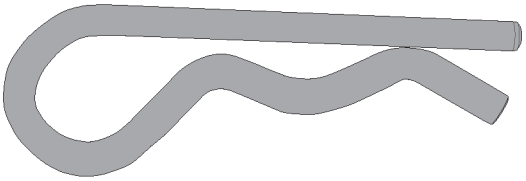

CLIP - HITCH PIN, 4 1/16"

1332460 MTM C61-25004-00 KIMBLE

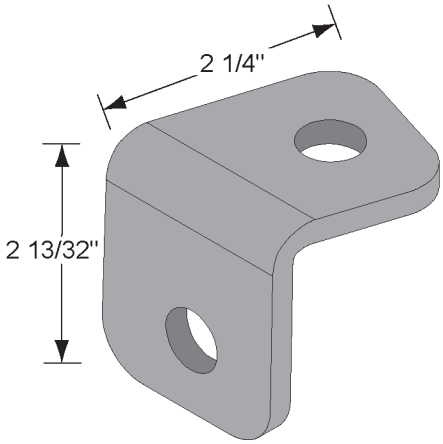

BRACKET - LADDER, LH

1332562 MTM S07-00540-00 KIMBLE

BRACKET - LADDER, RH

1332563 MTM S07-00580-00 KIMBLE

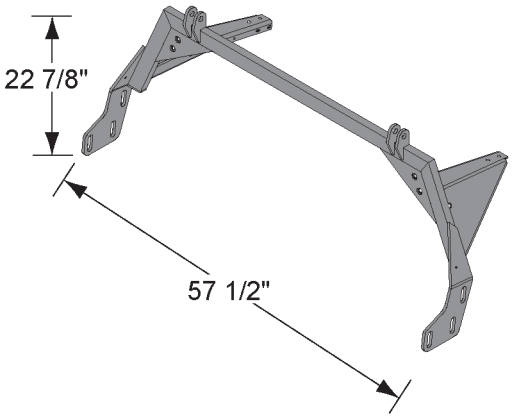

HOOP ASSY - CHARGE HOPPER

1334461 MTM S10-000S-00 KIMBLE

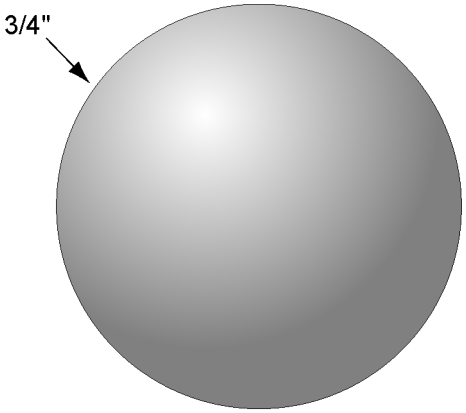

BALL - BRG, .75 CHR STL, G25, 150 PC

1555147 MTM C79-75200-00 KIMBLE

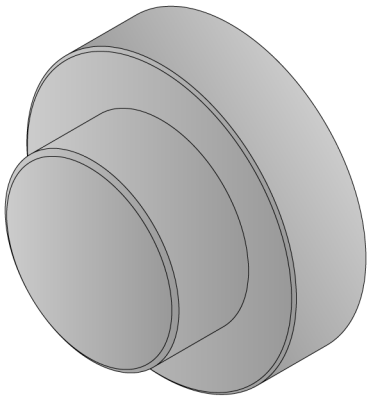

PLUG - COLLECTOR BEARING

1358821 MTM S08-006200-00 KIMBLE

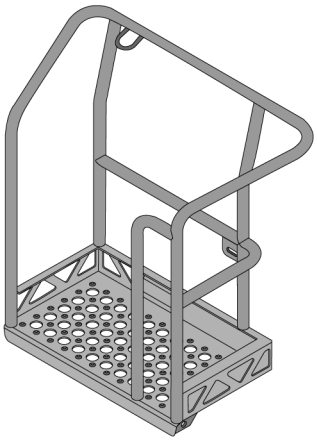

PLTF,UPR ASSY,K2000 UNV

1332195 MTM S14-000K0-00 KIMBLE

S14-00AA0-00 KIMBLE

LONDON

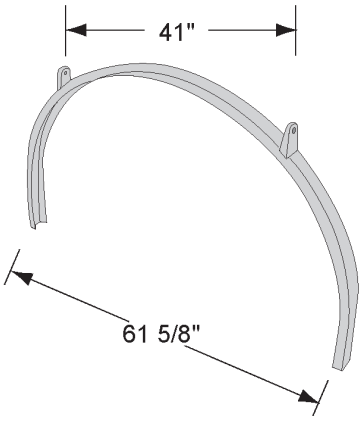

HOOP - DRUM, PAVER

1255824 MTM MC-38571 LONDON

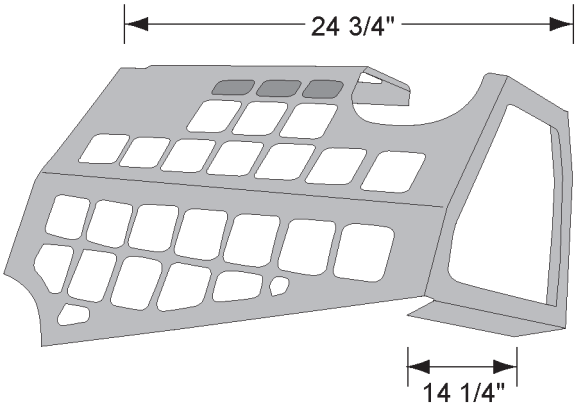

GUARD - HOPPER, STD TILT

1255899 MTM MC-40030 LONDON

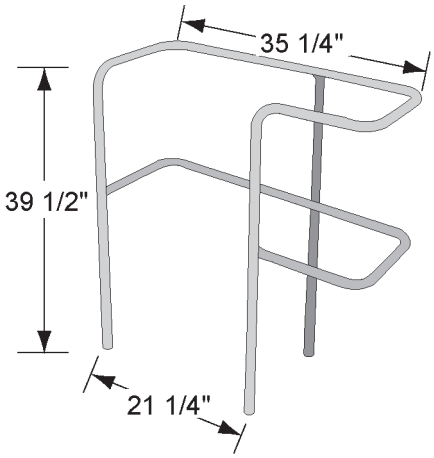

RAIL ASSY - LADDER, PAVER

1256054 MTM LM-1075 LONDON

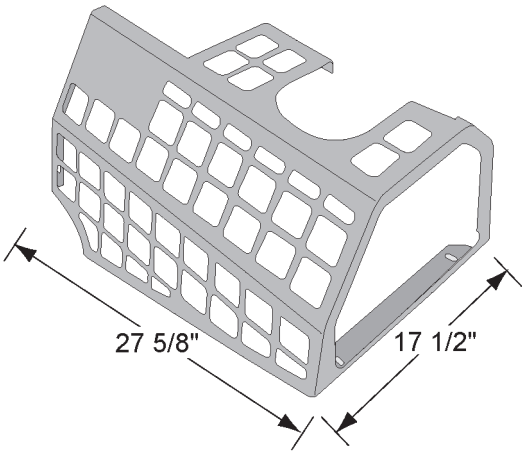

GUARD - HOPPER, BOOSTER PAVER

1255894 MTM MC-39878 LONDON

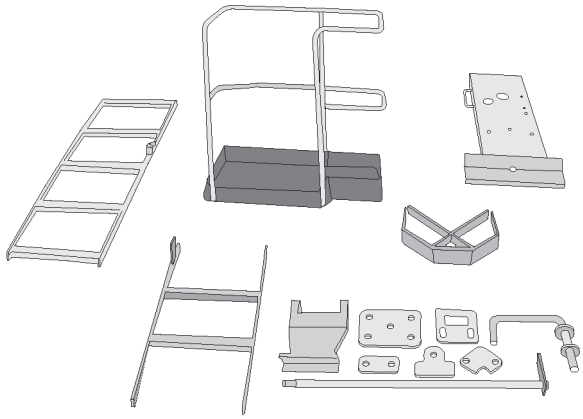

LADDER AND PLATFORM - PAVER

1256048 MTM MD-40664 LONDON

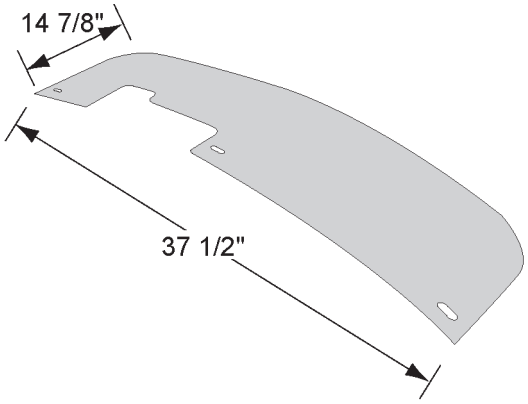

GUARD - DRIP RING, DRUM, PAVER

1327803 MTM MB-40407-02 LONDON

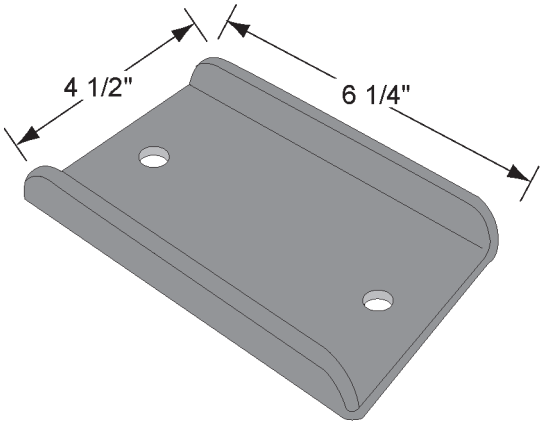

BRACKET - BAR, BOUNCE

1327802 MTM MC-39782 LONDON

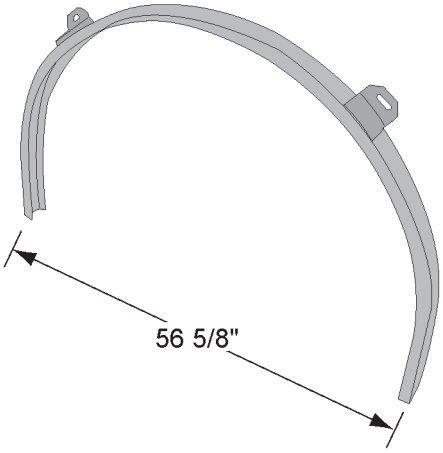

HOOP - DRUM, W/LUGS, STANDARD

1327805 MTM MC-35745-01 LONDON

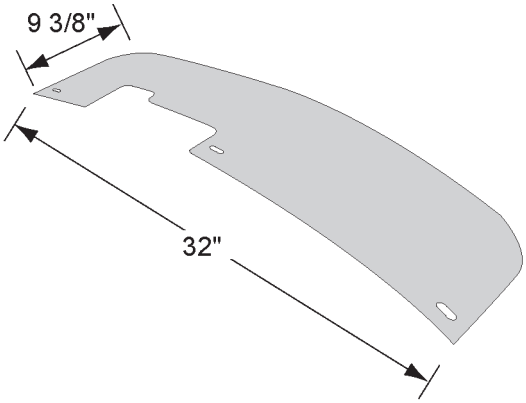

GUARD - DRIP RING, DRUM, STANDARD

1327804 MTM MB-40407-01 LONDON

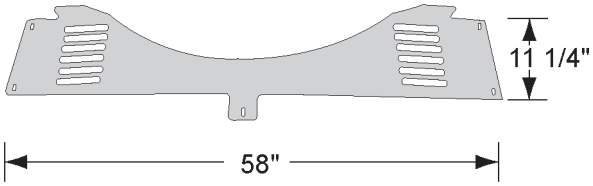

GUARD - ROLLER, DRUM, PAVER

1327806 MTM - NLA MC-39883 LONDON

NOTE: Use 1 each of MB-42022-01 & MB-42022-02.

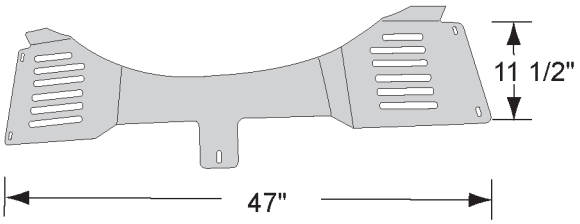

GUARD - ROLLER, DRUM, STANDARD

1327808 MTM MC-39880 LONDON

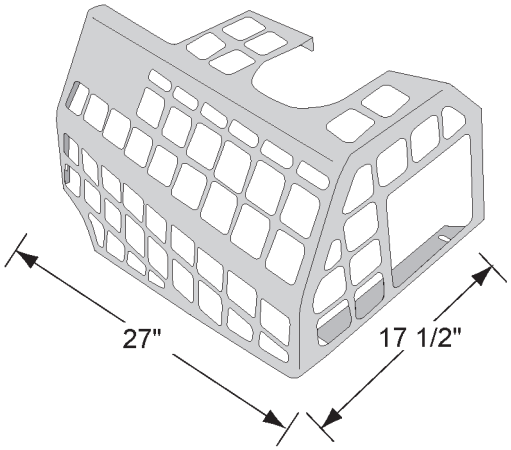

GUARD - HOPPER, PAVER

1327818 MTM MC-38841 LONDON

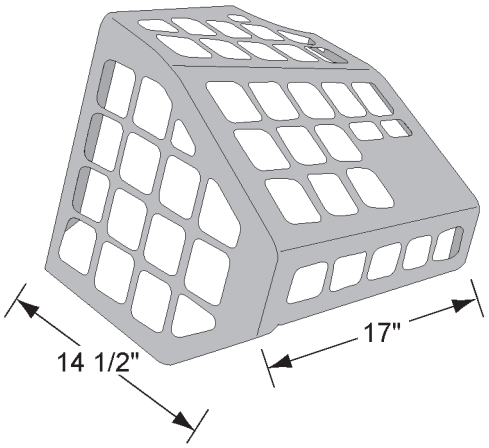

GUARD - HOPPER, STANDARD

1327824 MTM MC-39877 LONDON

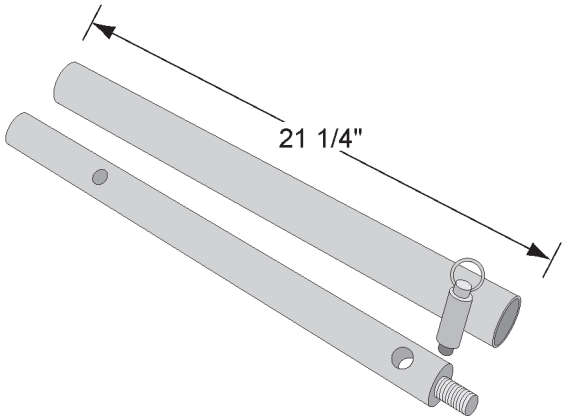

STRUT ASSY - HOPPER

1327825 MTM MB-39939 LONDON

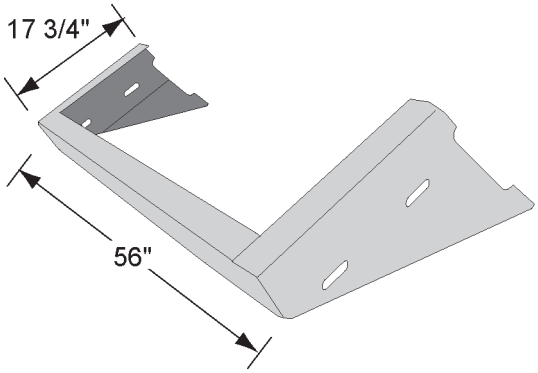

FRAME - SUPPORT, HOPPER

1327826 MTM MC-36396 LONDON

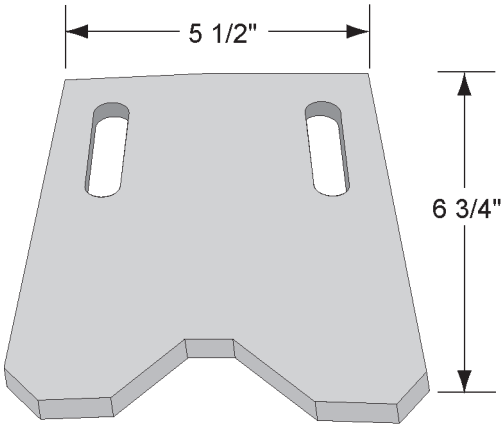

SUPPORT - HOPPER, LOWER, PAVER

1327828 MTM MB-38602 LONDON

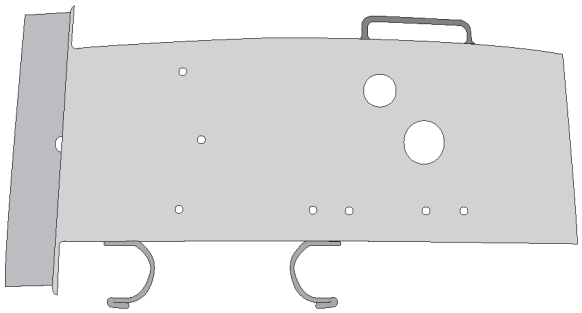

SUPPORT - LADDER

1327831 MTM MB-35124 LONDON

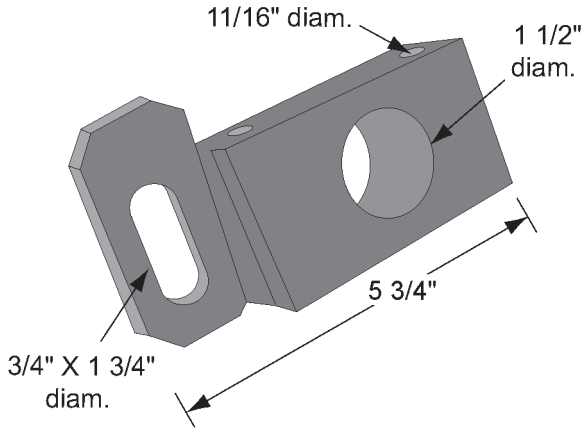

BLOCK - PIVOT, AXLE LATCH, LMI

1331091 MTM MB-39305 LONDON

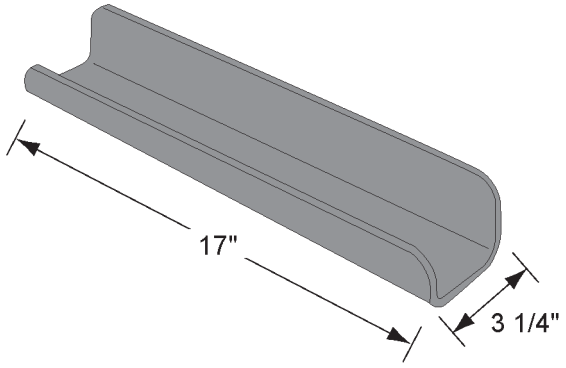

CHANNEL - SUPPORT, LADDER

1327830 MTM MB-38741 LONDON

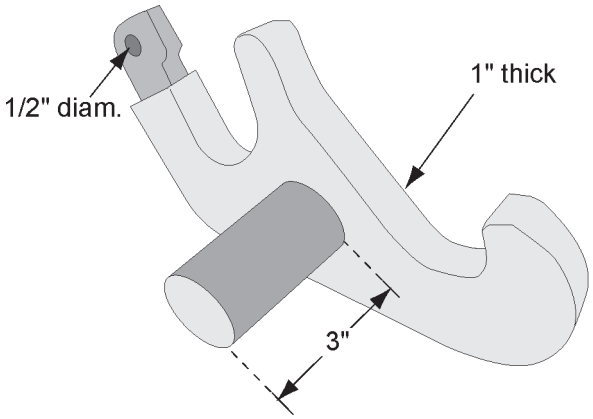

LATCH - AXLE, LMI

1331092 MTM MB-39308 LONDON

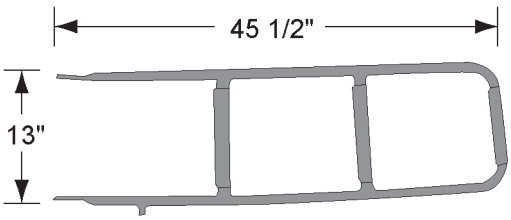

LADDER - LOWER

1327833 MTM MB-29048 LONDON

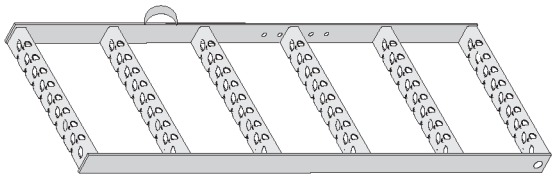

LADDER ASSY - EXTENSION, 5 STEP

1255599 MTM MB-38712 LONDON

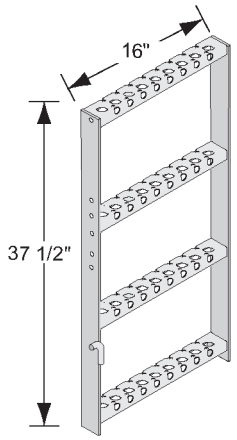

LADDER ASSY - EXTENSION, 4 STEP

1255630 MTM MB-40665 LONDON

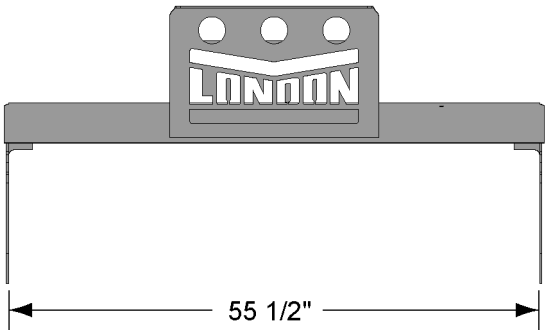

SUPPORT - ACTION, HOPPER

1332054 MTM MC-41161 LONDON

MTM

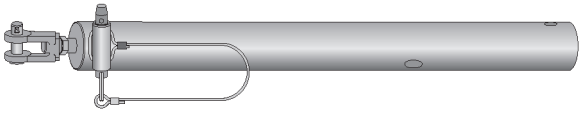

STRUT ASSY - TILT HOPPER

1255662 MTM MB-40882 LONDON

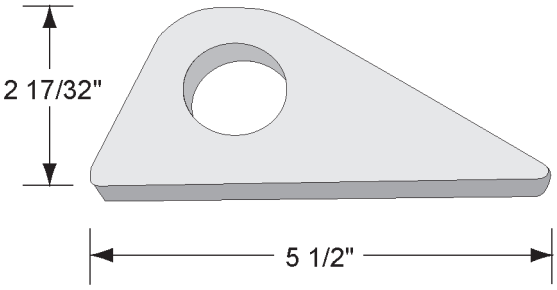

MOUNT - LATCH, '93-'99

1503879 MTM

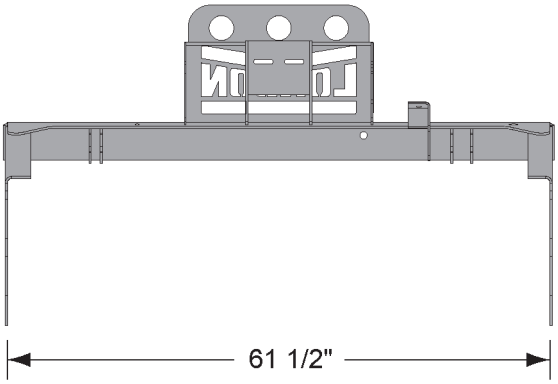

SUPPORT - HOPPER, PAVER

1332053 MTM MC-41165 LONDON

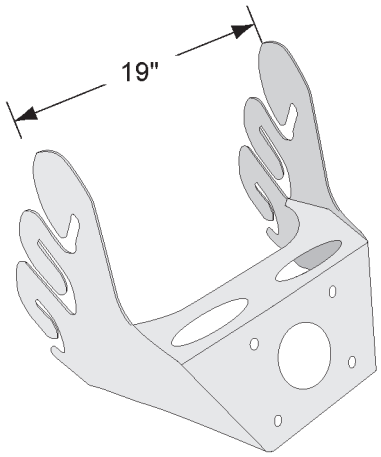

BRACKET - 3 CHUTE, VERTICAL

1140851 MTM

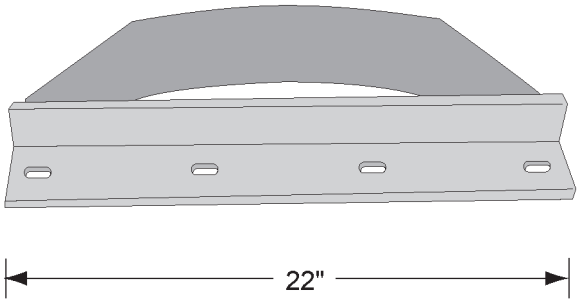

DEBOUNCER - HI HOPPER

0150204 MTM

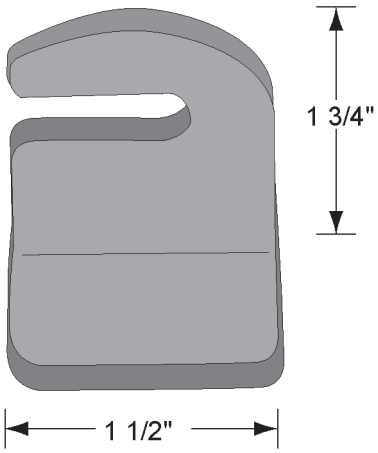

CLIP - SPRING, REAR PED

0182229 MTM

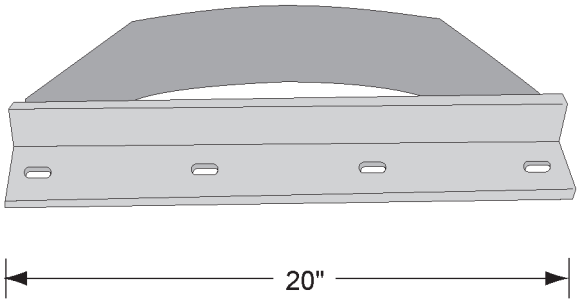

DEBOUNCER ASSY - STD '83-'92

0150205 MTM

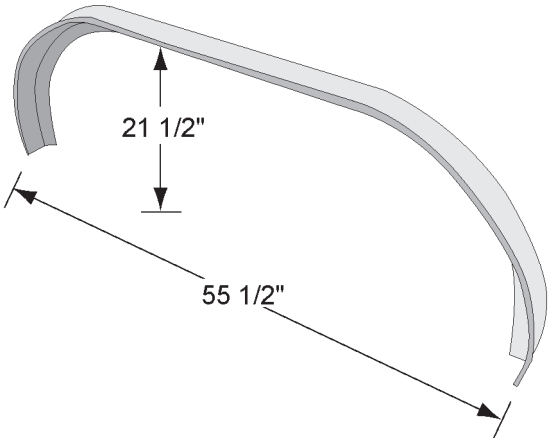

HOOP - LOW ANGLE

0153365 MTM

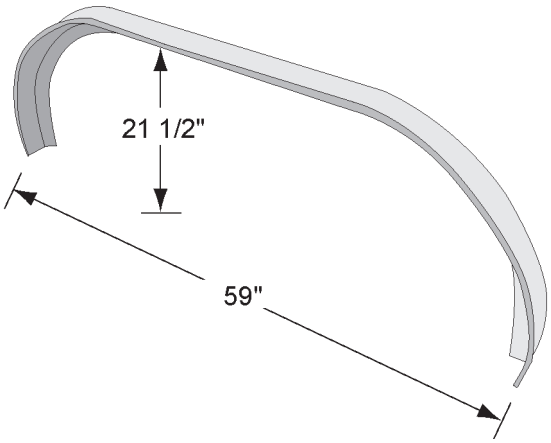

HOOP - ANGLE, PAVER, 46"

0153547 MTM

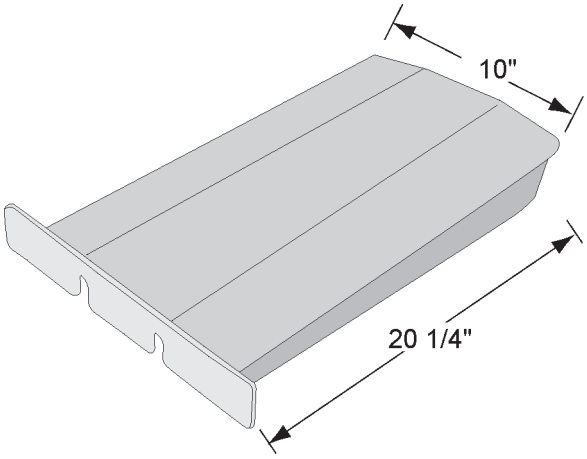

SUPPORT - CHARGE HOPPER

0150245 MTM

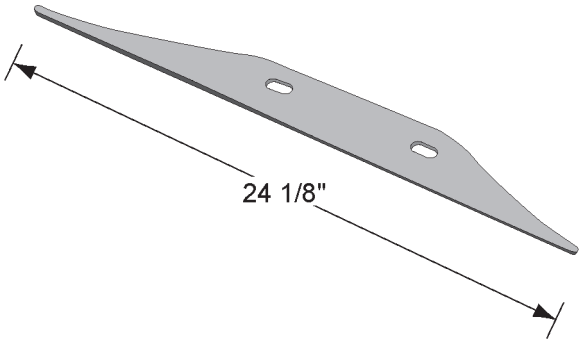

MOUNT - LOWER LADDER BOLT

0182411 MTM

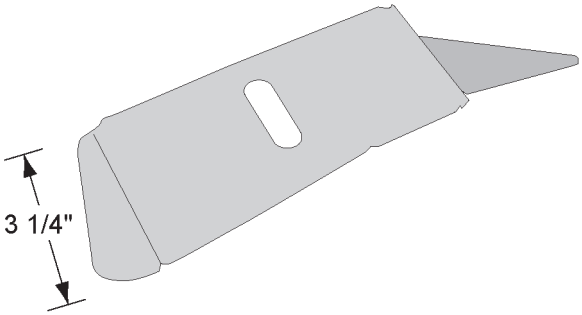

SUPPORT - HOPPER REST, RH

0153576 MTM

SUPPORT - HOPPER REST, LH

0153577 MTM

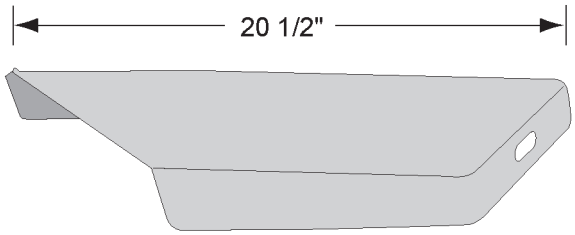

SUPPORT - HOPPER, STD, LH

0153636 MTM

SUPPORT - HOPPER, STD, RH

0153635 MTM

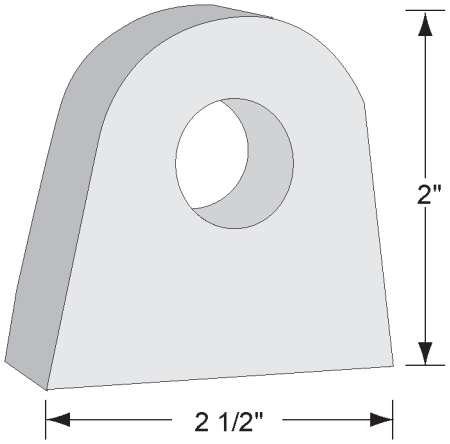

LUG - HOPPER PIVOT

0153289 MTM

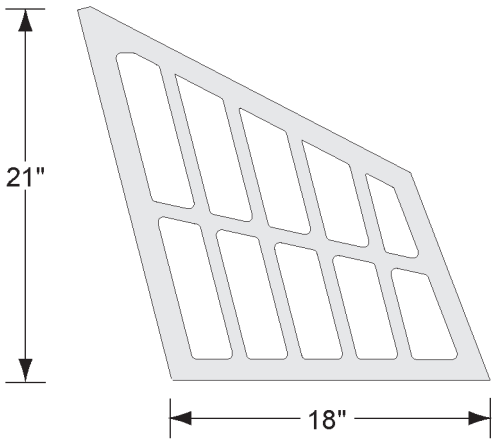

GUARD - PAVER WASHOUT, 46”

0153549 MTM

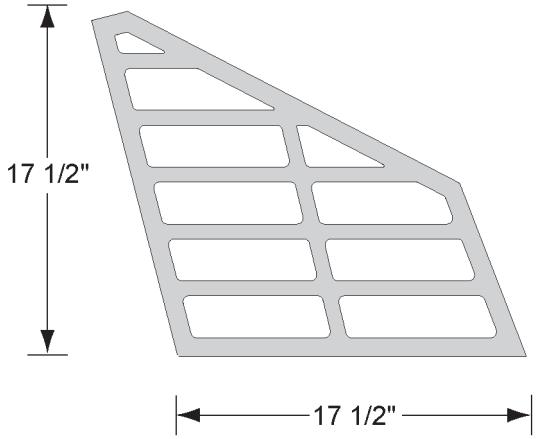

GUARD - STANDARD WASHOUT

0153359 MTM

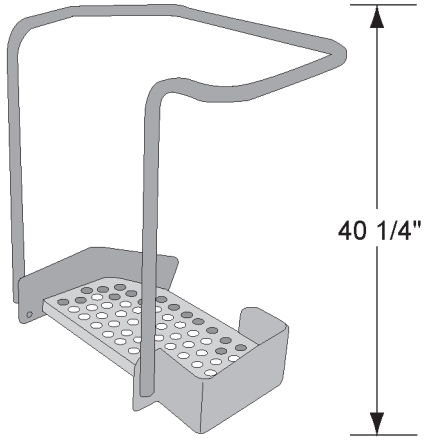

LADDER - UPPER, W/RAILS

0153320 MTM

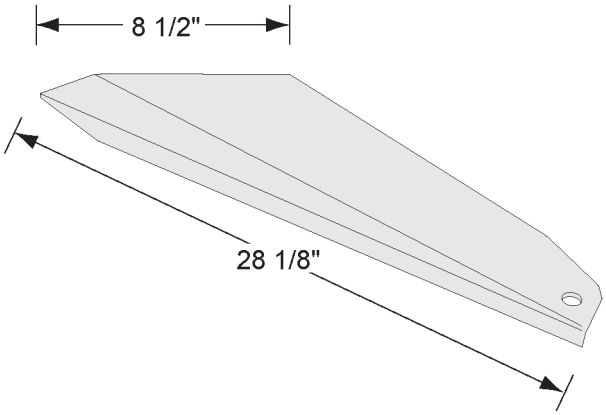

SUPPORT - CHARGE HOPPER, LH

0182245 MTM

SUPPORT - CHARGE HOPPER, RH

0182240 MTM

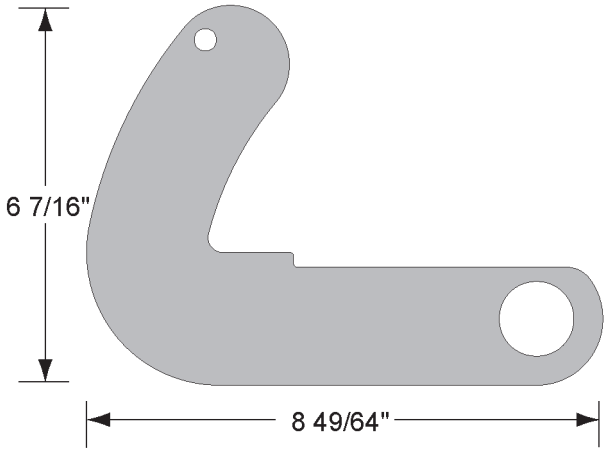

ARM - LEVER, TRAILER LATCH, BMIII

0182181 MTM

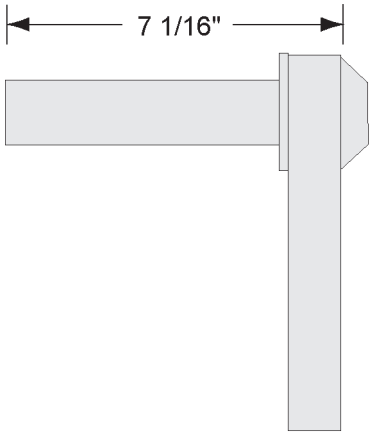

LATCH ASSY - TRAILER, BMIII

0182175 MTM

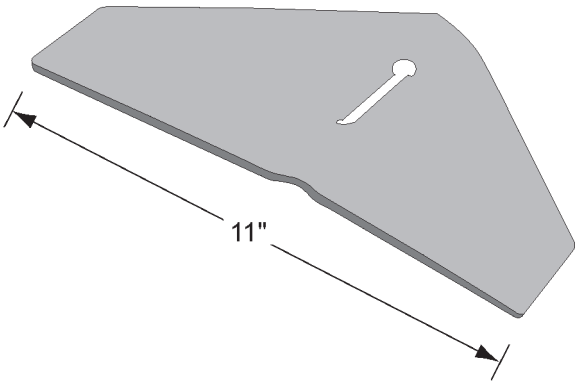

OVERLAY - HANDRAIL, UPPER

0153338 MTM

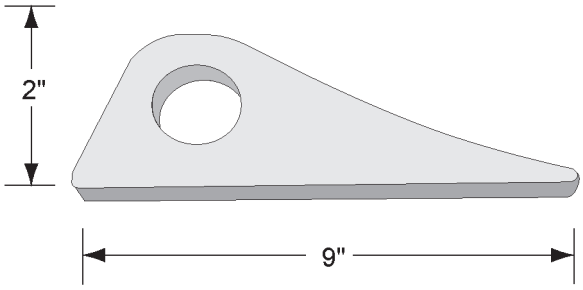

MOUNT - LATCH PIVOT, HOOK SIDE

0153302 MTM

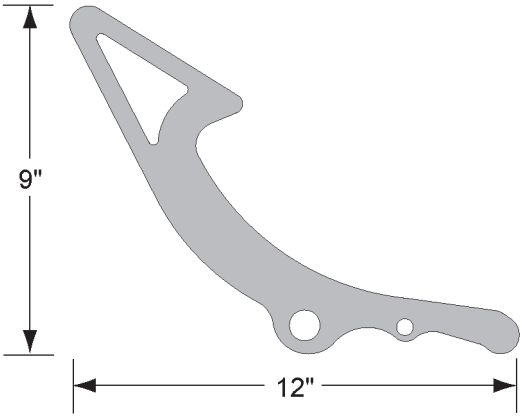

HOOK - LATCH

1104551 MTM

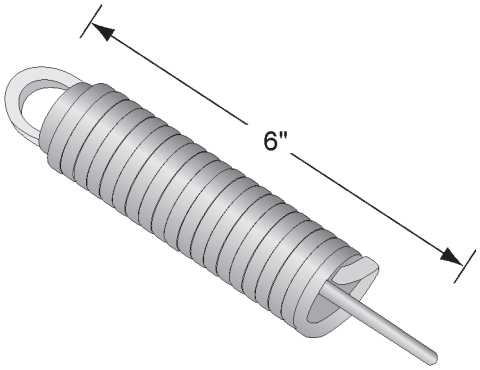

SPRING - LATCH, BMV

1104668 MTM

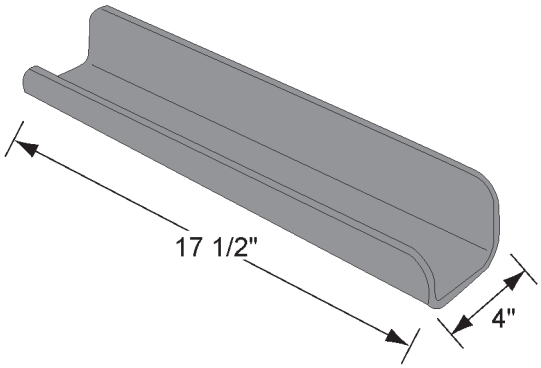

HOPPER - SUPPORT, PAVER, LH

1105290 MTM

HOPPER - SUPPORT, PAVER, RH

1105289 MTM

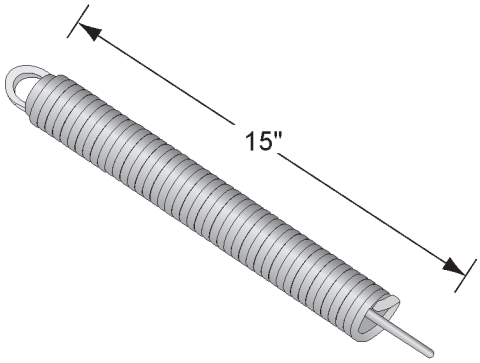

SPRING - LATCH, BMIII

0011234 MTM

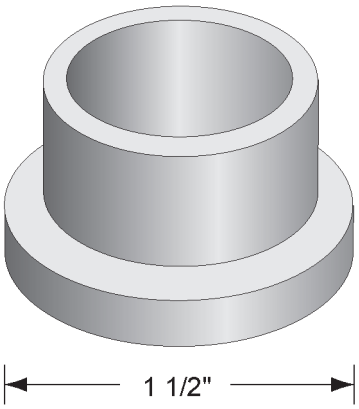

BUSHING - HOOK, LATCH, PIVOT

1104655 MTM

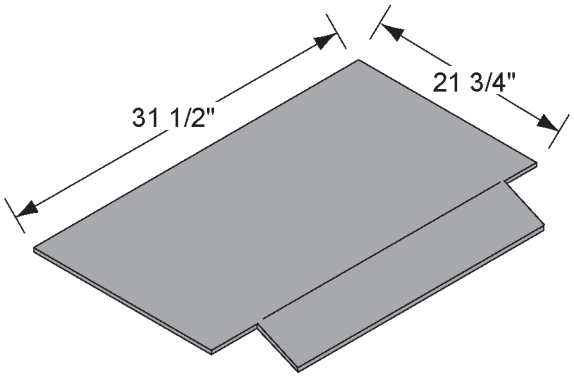

COVER - PEDESTAL, REAR, CHASSIS

1271065 MTM

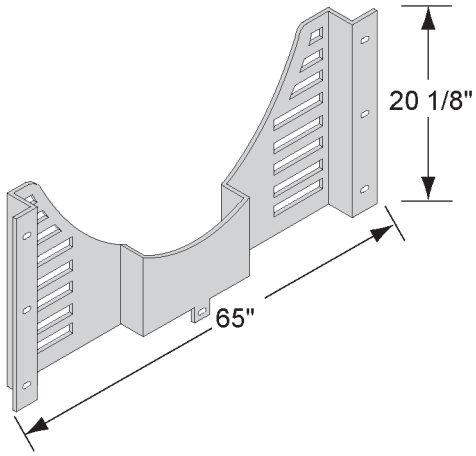

GUARD - ROLLER, FRONT, PAVER

1103988 MTM

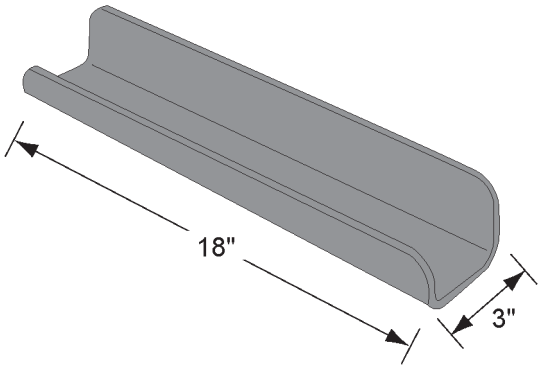

HOPPER - SUPPORT, LH

1105288 MTM

HOPPER - SUPPORT, RH

1105287 MTM

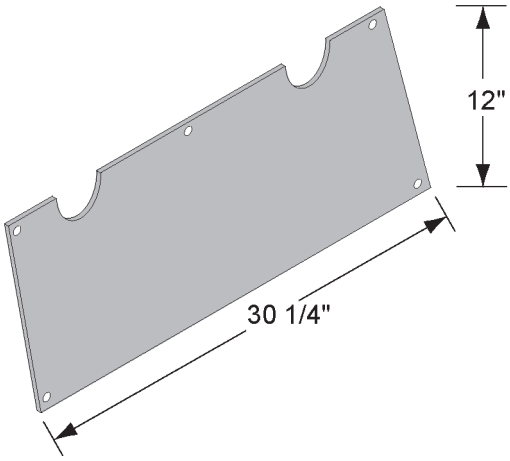

COVER - PEDESTAL, REAR, LOWER

1271063 MTM

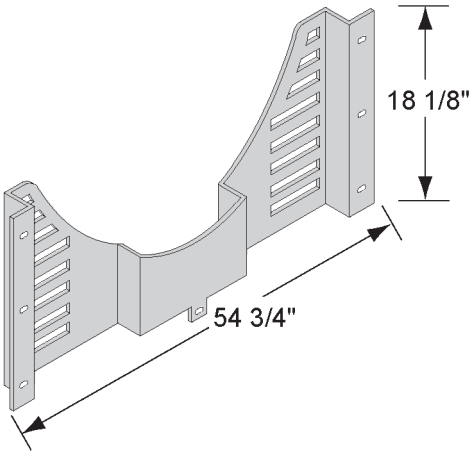

GUARD - ROLLER, REAR, STANDARD

1103574 MTM

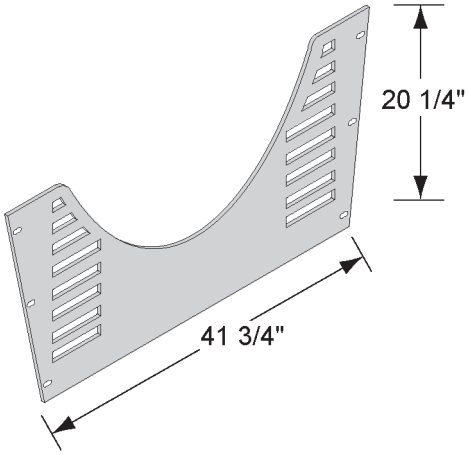

GUARD - ROLLER, FRONT, STANDARD

1103862 MTM

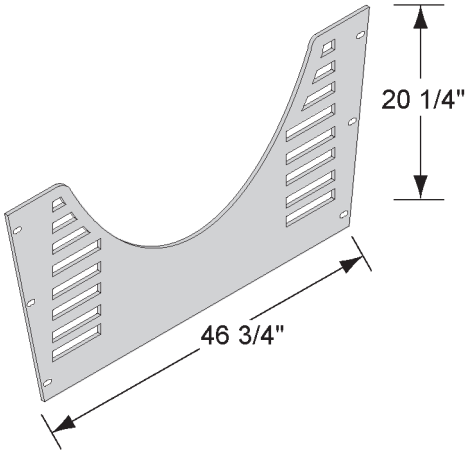

GUARD - ROLLER, REAR, PAVER

1103987 MTM

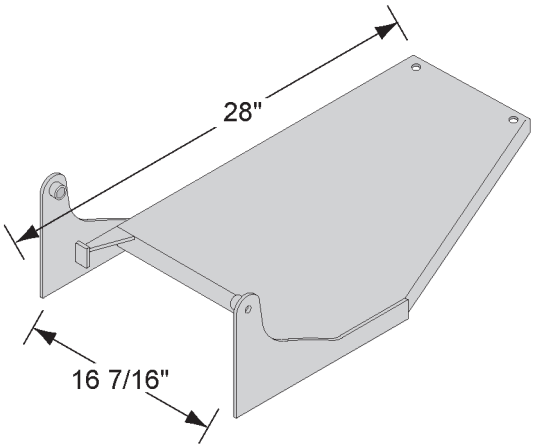

PLATFORM - LADDER, LOWER

0182410 MTM

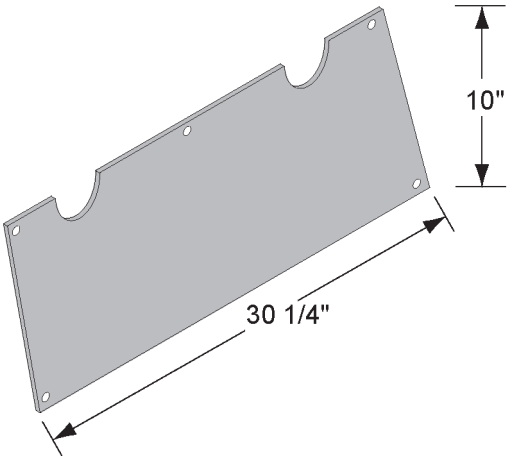

COVER - PEDESTAL, REAR, UPPER

1270164 MTM

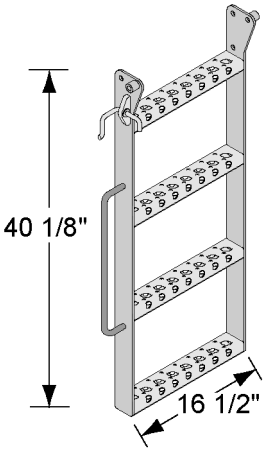

LADDER ASSEMBLY - EXTENSION

0152375 MTM

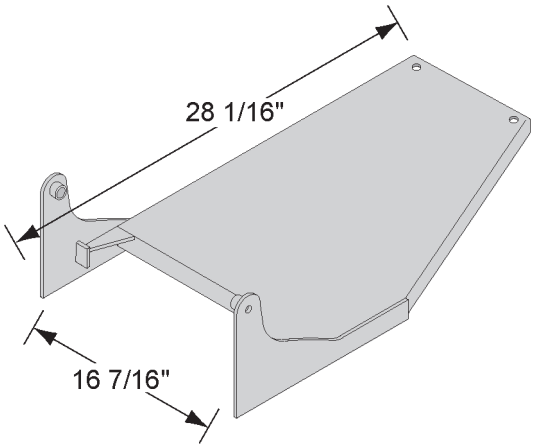

PLATFORM - LADDER, LOWER

0152600 MTM

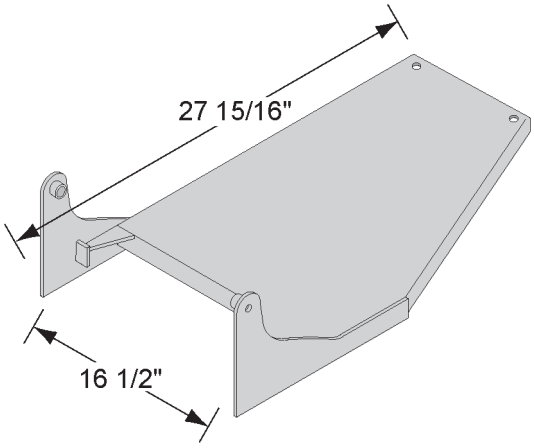

9 YD + SMALLER LOWER PLATFORM

0152445 MTM

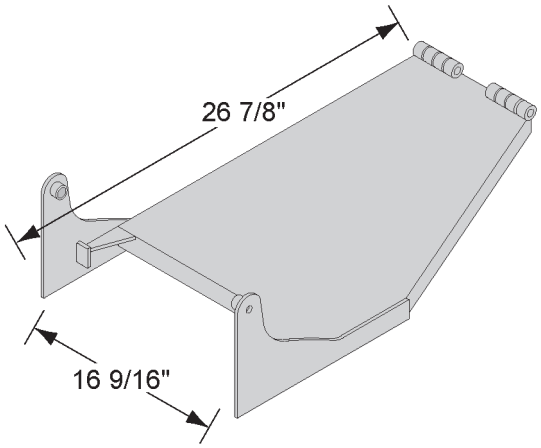

PLATFORM - LADDER, LWR, 9YD, WLDT

1517436 MTM

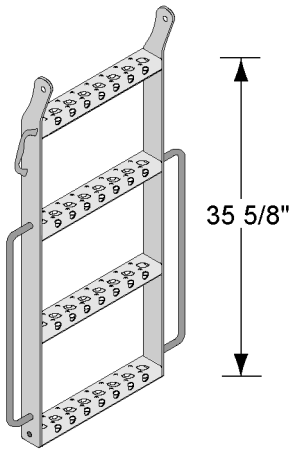

LADDER - UPR, 9.5 YD, W/HANDLES

1270138 MTM

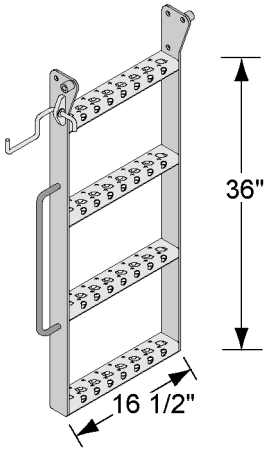

LADDER ASSEMBLY - EXTENSION

1270132 MTM

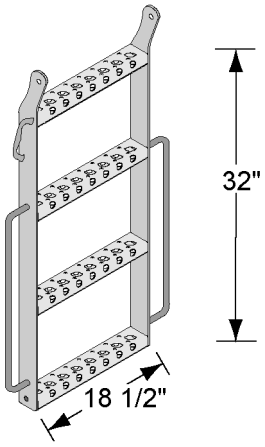

LADDER - UPPER, 9YD, 2006

1270125 MTM

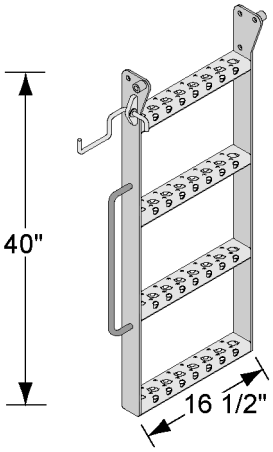

LADDER ASSEMBLY - EXTENSION, 9YD, 2006

1270111 MTM

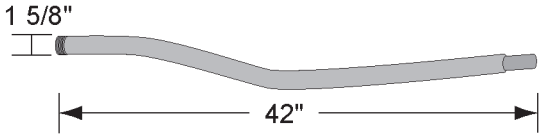

PIPE - WATER, UPRITE

0150215 MTM

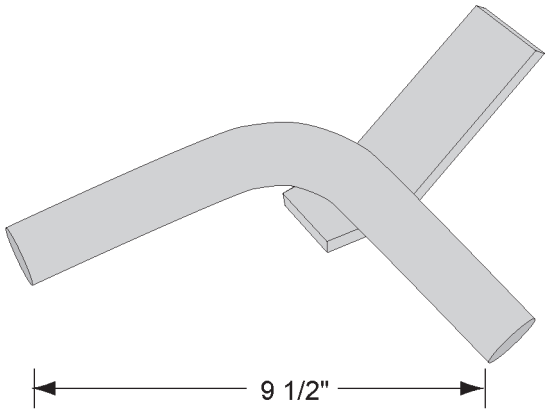

PIPE - WATER, INJECTION, W/BRACKET

0150225 MTM

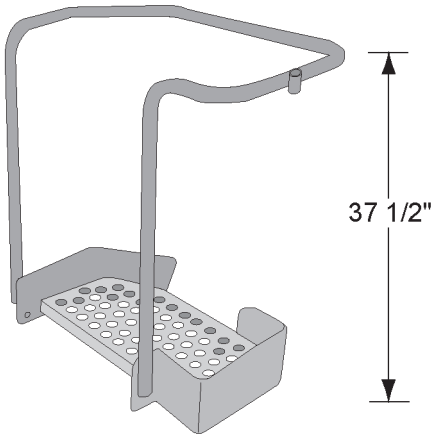

PLATFORM - UPPER, W/HANDRAIL, PVR

MTM

No Image Available

SHIM - DEBOUNCER, 1/4”

1170169 MTM

SHIM - DEBOUNCER, 3/8”

1170170 MTM

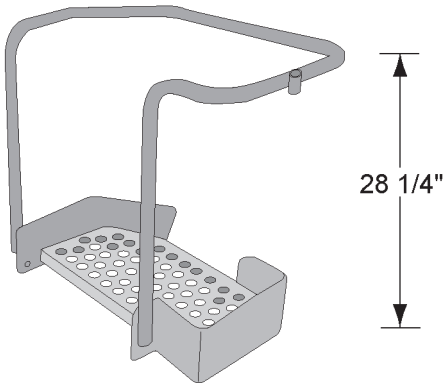

PLATFORM - UPPER, W/ HANDRAIL, PVR

0160330 MTM

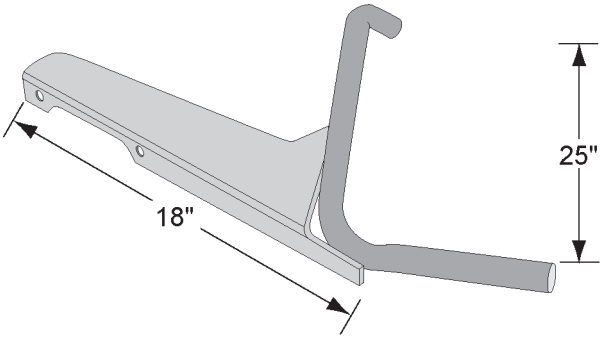

PIPE - WATER, INJECTION, W/BRACKET, ‘97

0153525 MTM

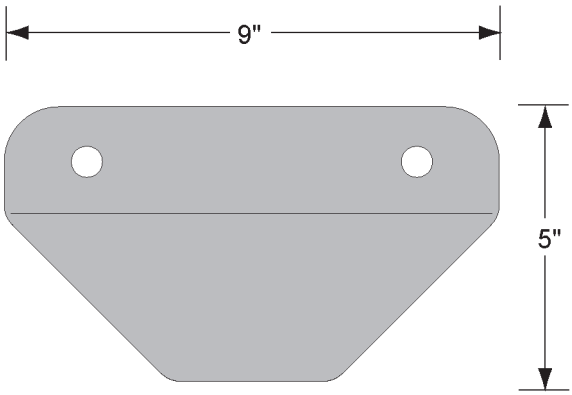

PLATE - DEBOUNCER

0153574 MTM

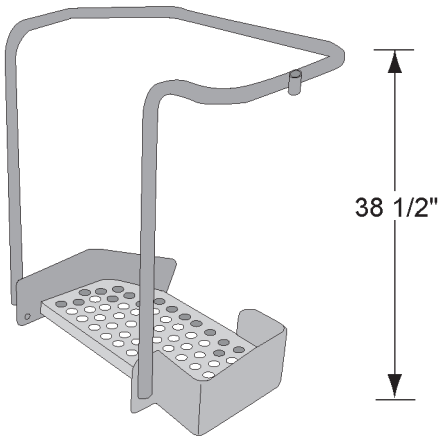

PLATFORM - UPPER, W/HANDRAIL, STD

1227959 MTM

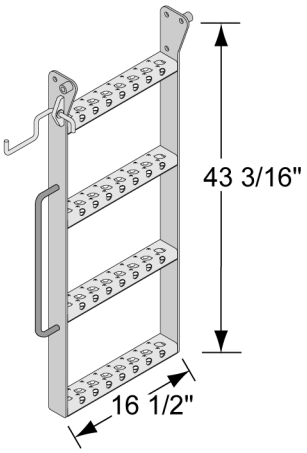

ASSEMBLY-LADDER EXTENSION

0152605 MTM

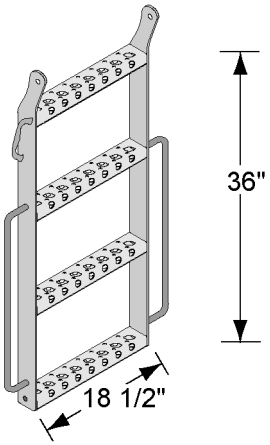

LADDER - UPPER, W/ HANDLES

1270131 MTM

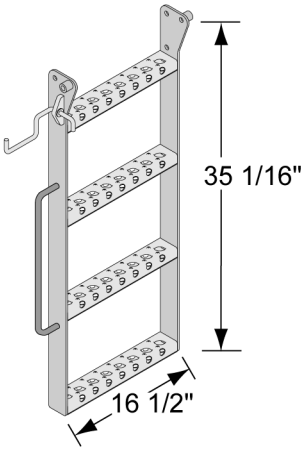

LADDER - UPPER, 2002

1109057 MTM - NLA

NOTE: Use 1 each of 1270131 & 1270132.

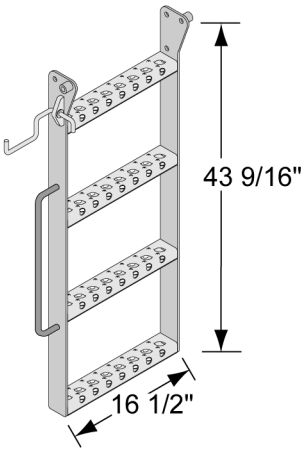

LADDER - EXTENSION, DUAL RUNGS

1270312 MTM

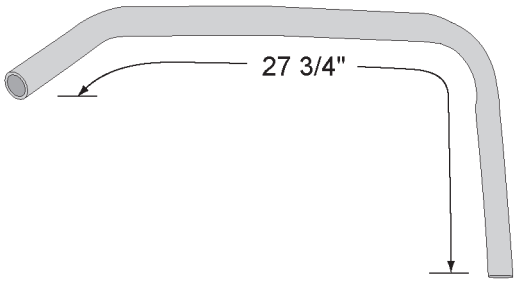

46" PAVER - WATER INJ. TUBE

0153548 MTM

REX

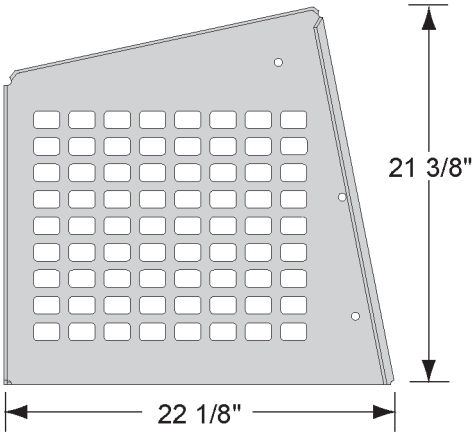

GUARD - WASHOUT

1114556 MTM 502-30309-80 REX

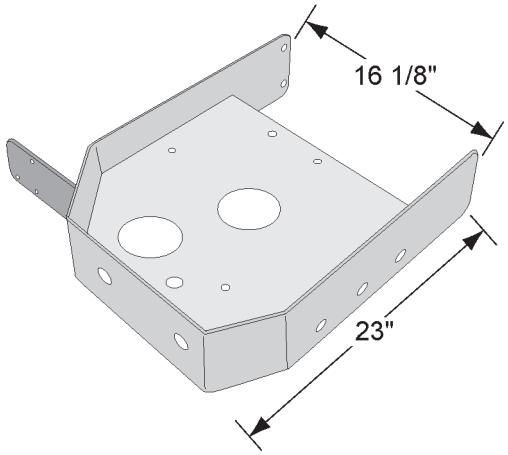

SUPPORT - LADDER, RHM, RHK, RHZ

1112785 MTM 502-20975-80 REX

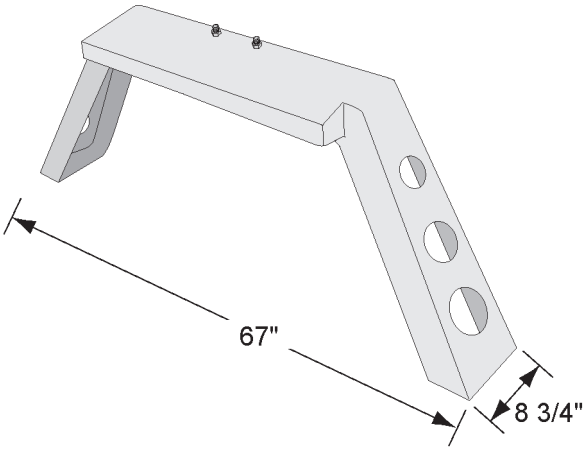

HOOP - PAVER, XKM

1114460 MTM 502-06498-80 REX

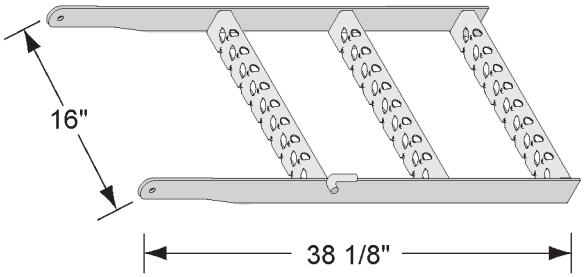

LADDER - LOWER, RHM, RHK, RHZ

1112766 MTM 502-20915-80 REX

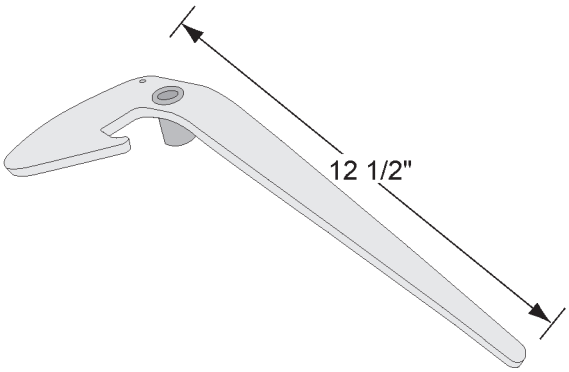

LATCH - LADDER

1139943 MTM 502-20742-80 REX

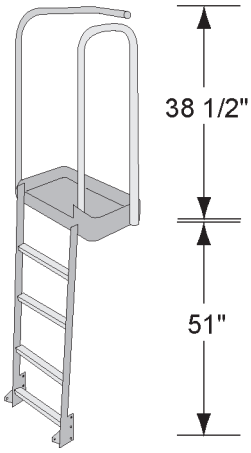

LADDER - UPPER, RHM, RHK, RHZ

1112849 MTM 502-09398-81 REX

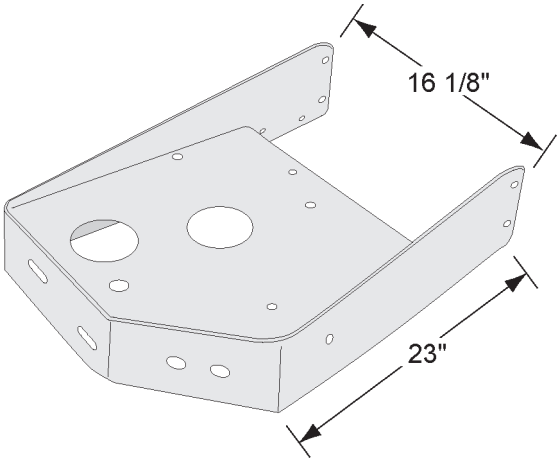

PLATFORM - LOWER LADDER, XHR, XHK, XHZ

1114544 MTM 502-20958-80 REX

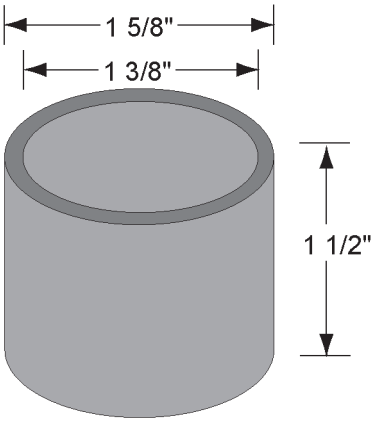

BEARING - HOOK, LATCH

1113040 MTM 298-00400-02 REX

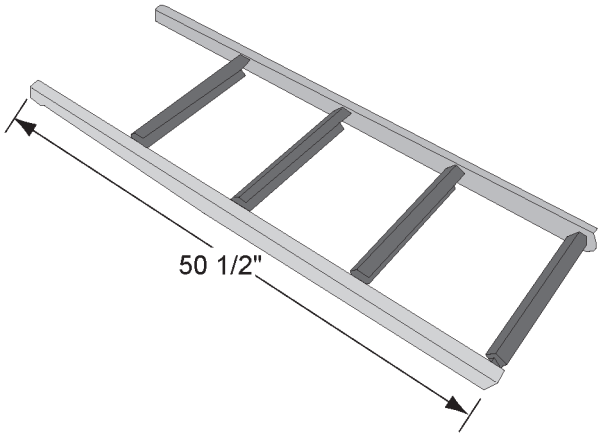

LADDER - LOWER, RLX

1144608 MTM 502-20509-80 REX

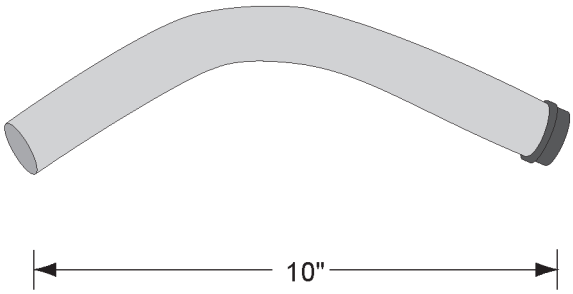

NOZZLE - DRUM INLET

1112748 MTN 102-07874-01 REX

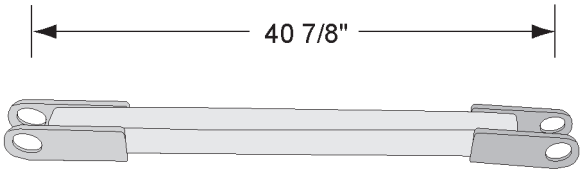

STRUT - FRAME, REAR (8-8.5 YD MIXERS)

1112682 MTM 502-20805-81 REX

SCHWING

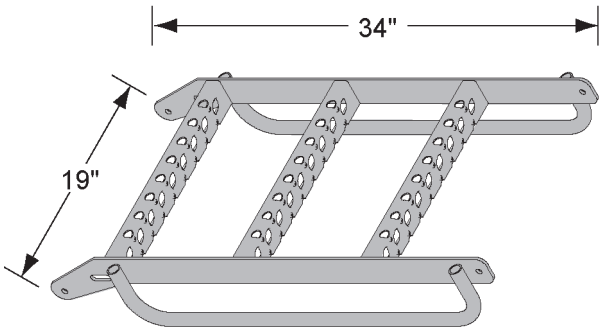

LADDER - UPPER

1326784 MTM 30389757 SCHWING

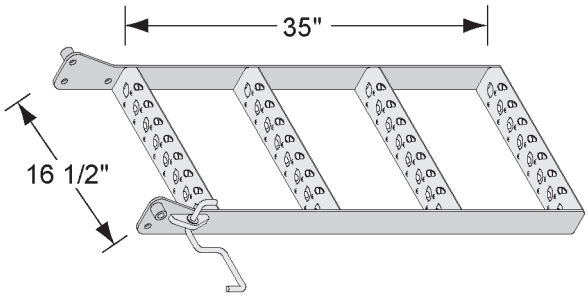

LADDER - EXTENSION

1326747 MTM 30389765 SCHWING

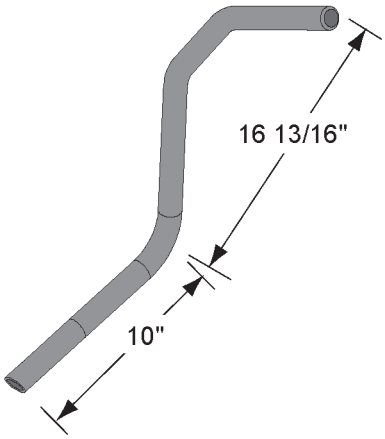

PIPE - WATER, INJECTION

1331304 MTM 30389032 SCHWING

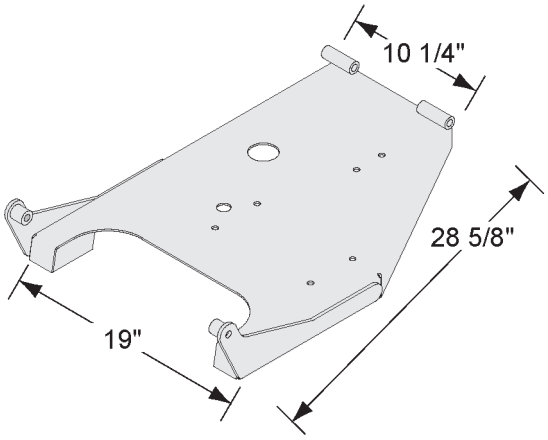

PLATFORM - LADDER, LOWER

1326498 MTM 30389665 SCHWING

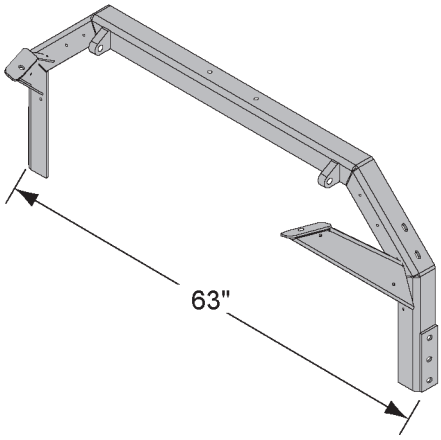

SUPPORT - HOPPER

1331666 MTM 30386676 SCHWING

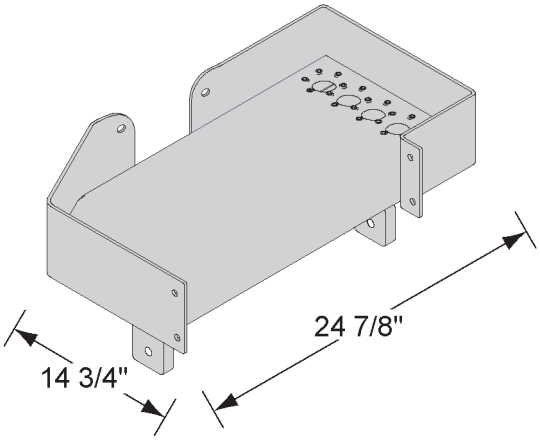

PLATFORM - UPPER, LADDER

1331443 MTM 30389666 SCWHING

SMITH

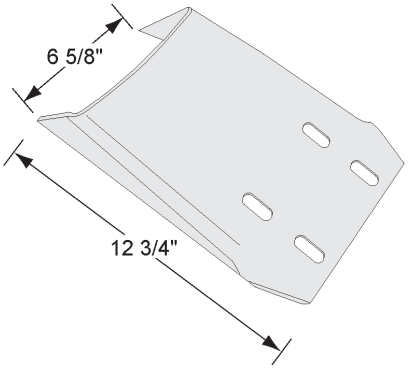

BRACKET - HOPPER, CHARGE

1111232 MTM 33354-00 SMITH

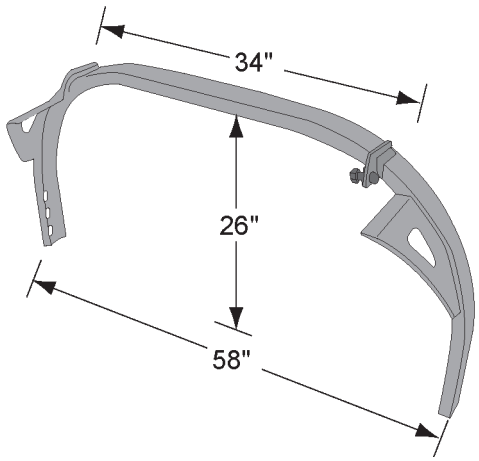

HOOP - DRUM, BCII

1110191 MTM 43940017 SMITH

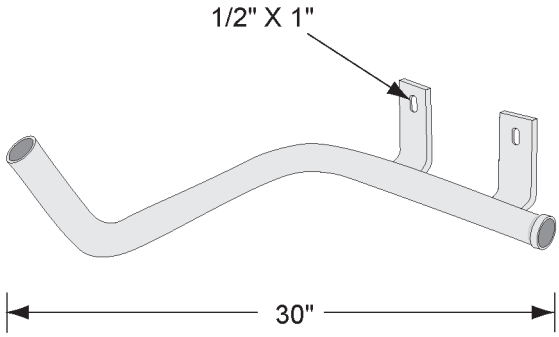

PIPE - WATER, INTAKE

1110249 MTM 43940039 SMITH

KNEE BRACE ASSEMBLIES

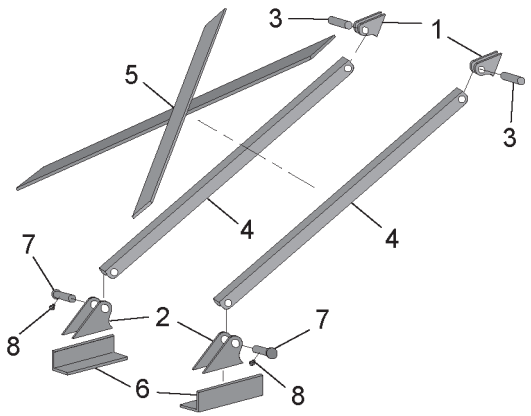

STRUT ASSY - W/X-BRACE & END ANGLE

0152180 MTM

Item	Description	MTM Part Number
1	EYE - MOUNT	0152163
2	EYE - BASE	0152166
3	PIN	0152164
4	PIPE	0152161
5	BRACE - CROSS	0152157
6	ANGLE - END	0152024
7	TUBE - INSERT	0183878
8	FITTING-GREASE,1/8” NPT STR SH	1240470

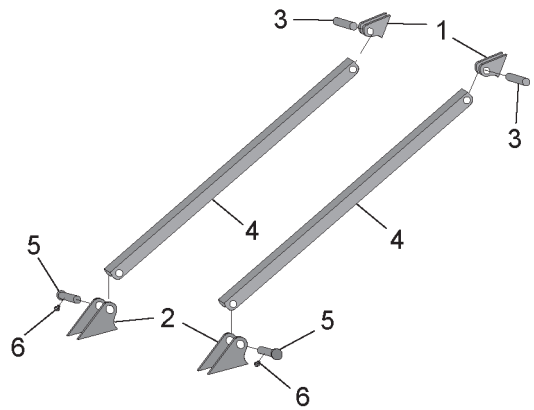

STRUT ASSY - REAR PED, EAST COAST PACKAGE

0152160 MTM

Item	Description	MTM Part Number
1	EYE - MOUNT	0152163
2	EYE - BASE	0152166
3	PIN	0152164
4	PIPE	0152161
5	TUBE - INSERT	0183878
6	FITTING-GREASE, 1/8” NPT STR SH	1240470

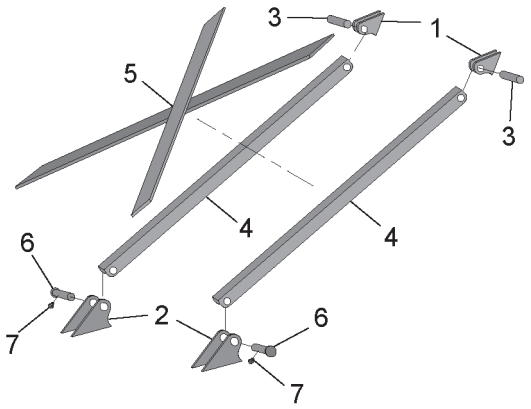

STRUT ASSY - W/X-BRACE & END ANGLE

0152185 MTM

Item	Description	MTM Part Number
1	EYE - MOUNT	0152163
2	EYE - BASE	0152166
3	PIN	0152164
4	PIPE	0152161
5	BRACE - CROSS	0152157
6	TUBE - INSERT	0183878
7	FITTING-GREASE, 1/8” NPT STR SH	1240470

THIS PAGE INTENTIONALLY LEFT BLANK

THIS PAGE INTENTIONALLY LEFT BLANK

Chute Pivots, Locks, Swings

ADVANCE / TEREX

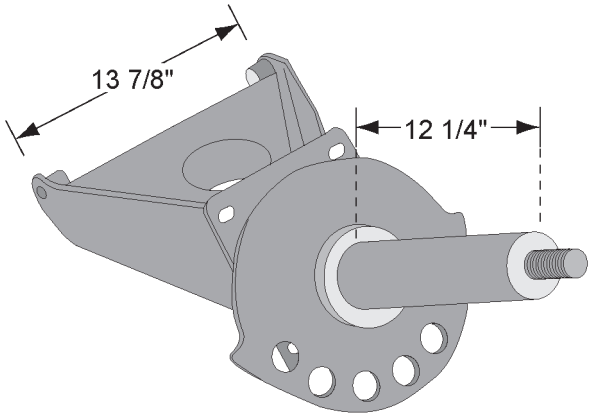

ARM - PIVOT

0152635 MTM 40166 TEREX

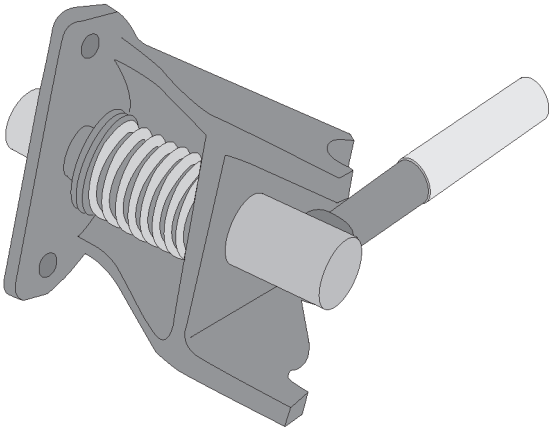

LOCK ASSY - CHUTE, MANUAL

0000259 MTM 40174 TEREX

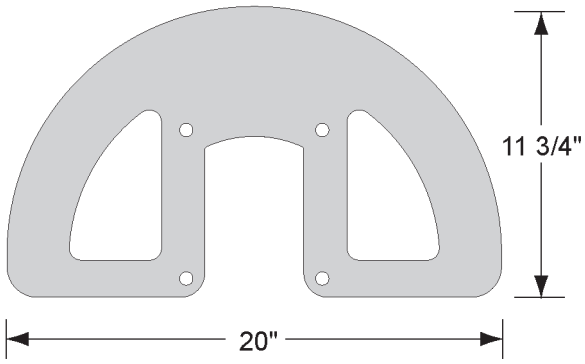

PLATE - CLAMP, CHUTE

0151277 MTM 40523 TEREX

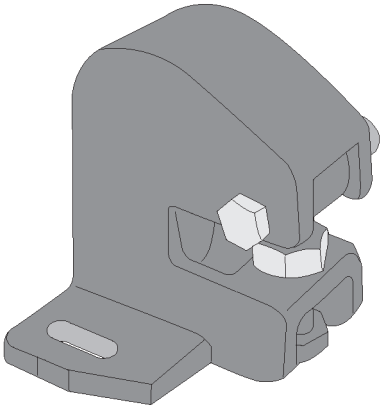

LOCK ASSY - PIVOT

0151310 MTM 40153 TEREX

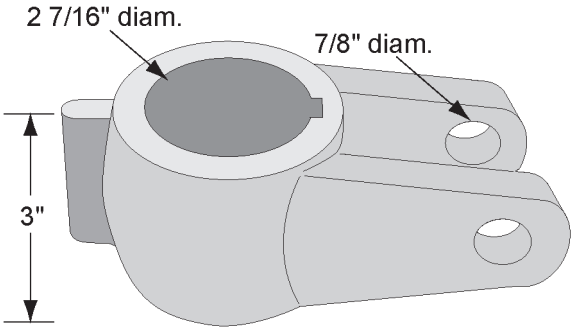

CLEVIS - PIVOT, CHUTE, 7/8”

0152641 MTM 40174 TEREX

CBMW

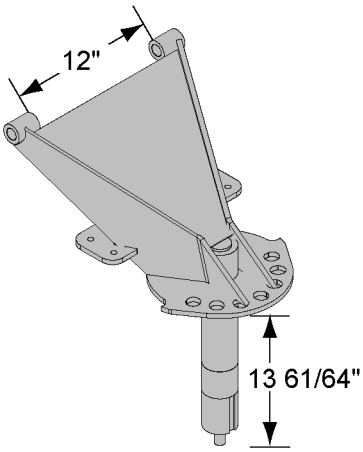

PIVOT - CBMW-BEARING

1370765 MTM 90570220 CBMW

CCB

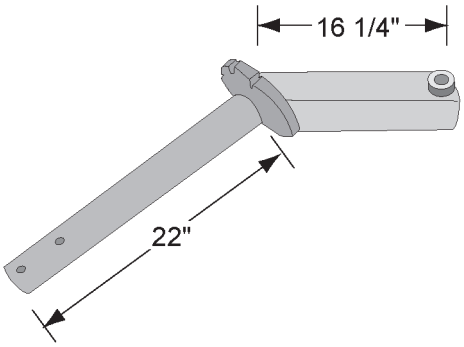

PIVOT - CHUTE, FOR LOAD STAR

0012103 MTM 5043415 CCB

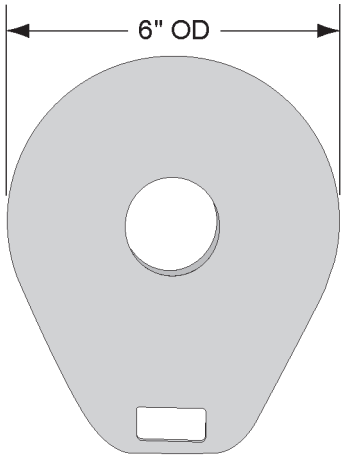

PLATE - C/L, W/O PAD

0016426 MTM 5041067 CCB

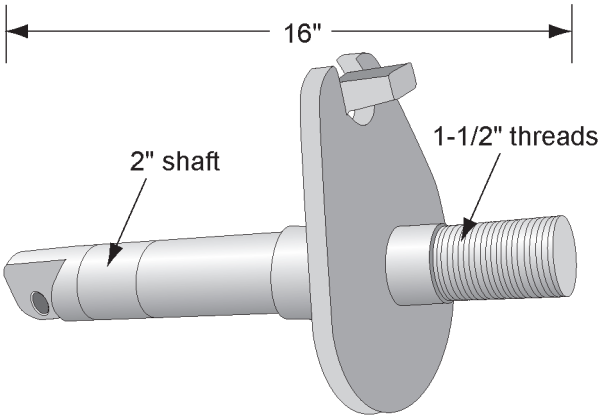

SHAFT - PIVOT

0016450A MTM 5040852 CCB

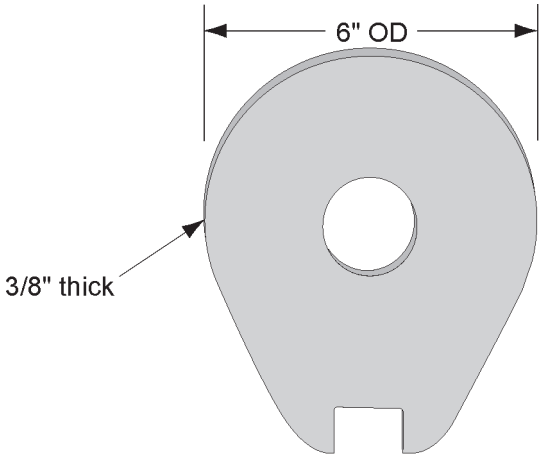

PLATE - TOP, C/L

0016428 MTM 5040137 CCB

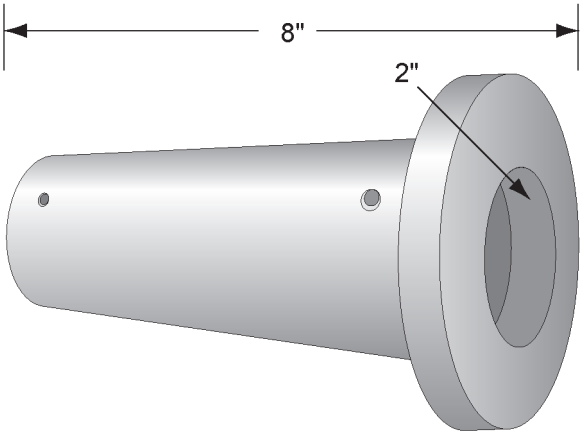

HOUSING ASSY - PIVOT

0016455 MTM 5027115 CCB

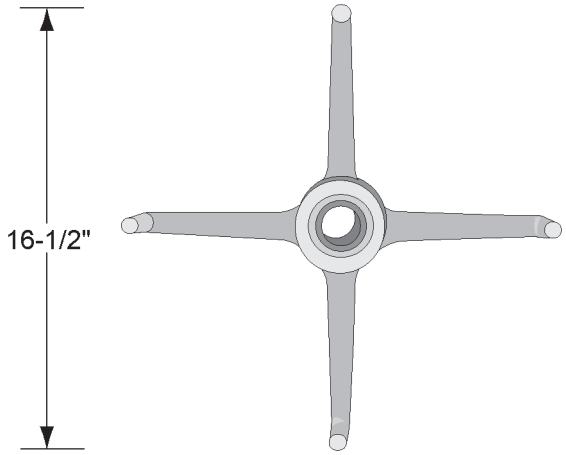

C/L MAN HDL

0016460 MTM 5041869 CCB

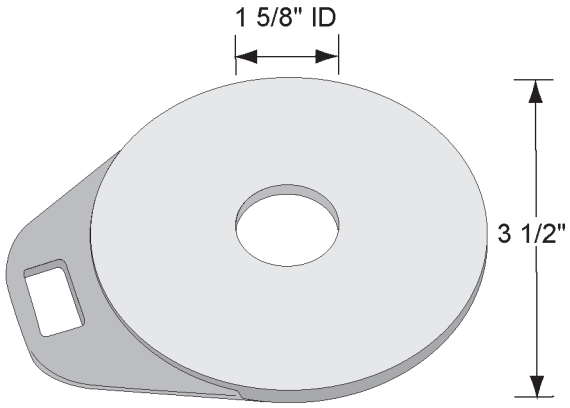

PLATE - C/L, W/LGE PAD

0016427 MTM 5040849 CCB

PIN - ROLL, SHAFT, CHA

0016925 MTM 1050174 CCB

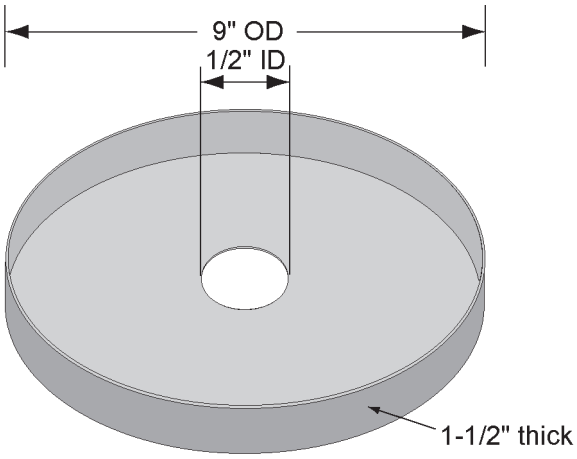

CHA MAN C/L CUR

0016447 MTM 5041374 CCB

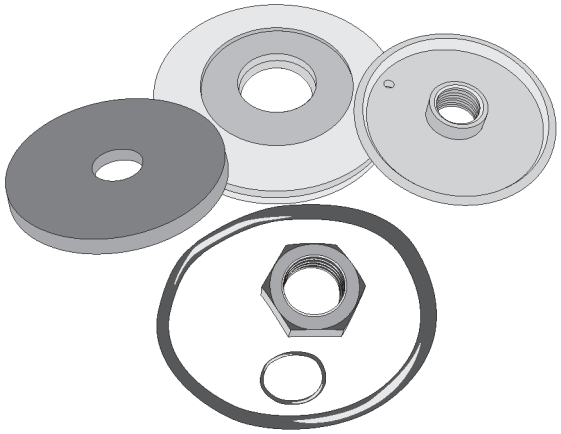

LOCK ASSY - CHUTE

0016454 MTM 5041914 CCB

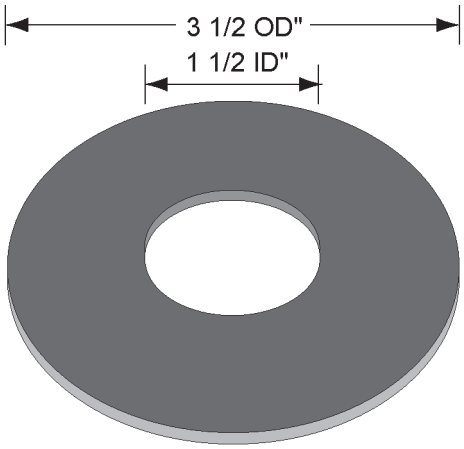

WASHER - FIBER, PIVOT, CHA

0016998 MTM 1320233 CCB

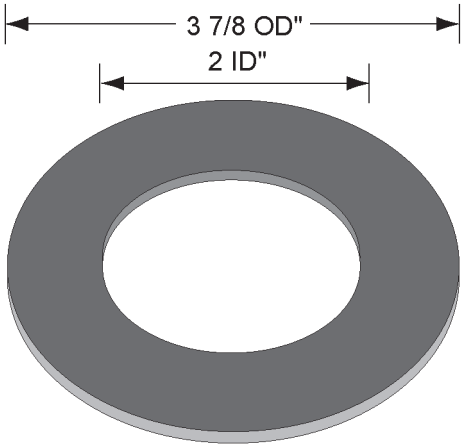

WASHER - NYLON, PIVOT, CHA

0016465 MTM 1050474 CCB

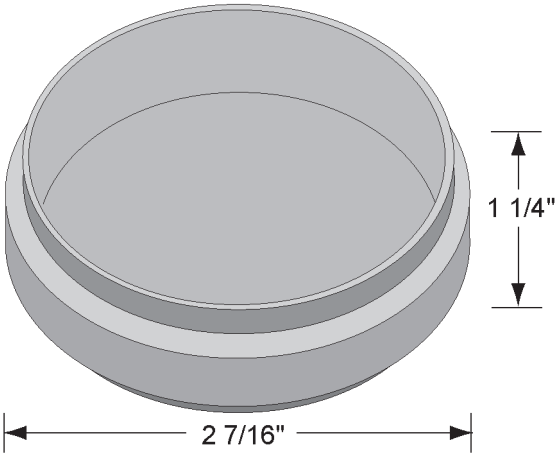

COVER - DUST, HDL, CHA

0016386 MTM 1111039 CCB

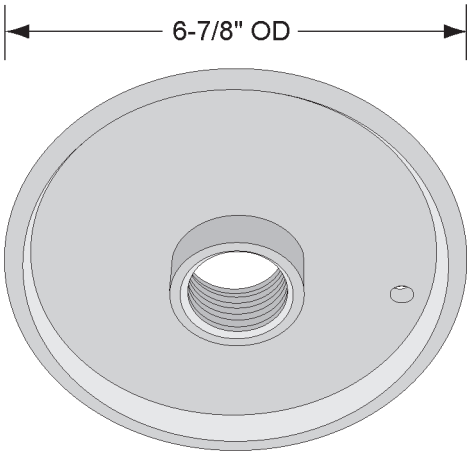

BODY - BR CHA

0016421 MTM 5041916 CCB

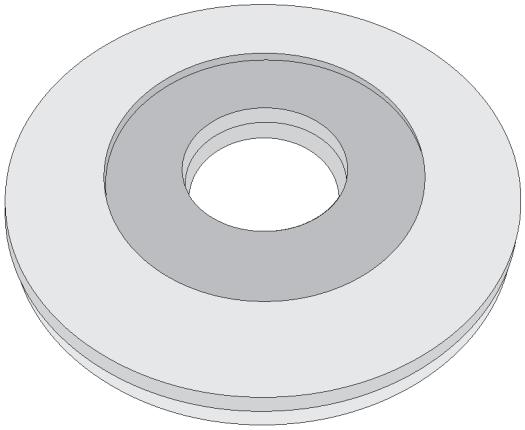

PISTON - BRASS, CHA

0016422 MTM 5041915 CCB

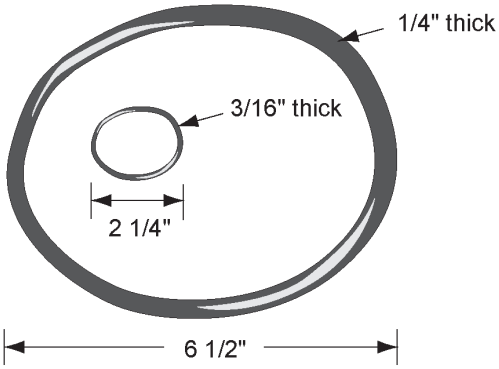

O-RING, SMALL

0016423 MTM 1690529 CCB

O-RING, LARGE

0016424 MTM 1690679 CCB

LONDON

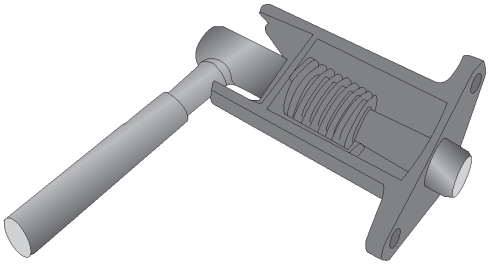

CHUTE LOCK ASSY

1255549 MTM MB-35571 LONDON

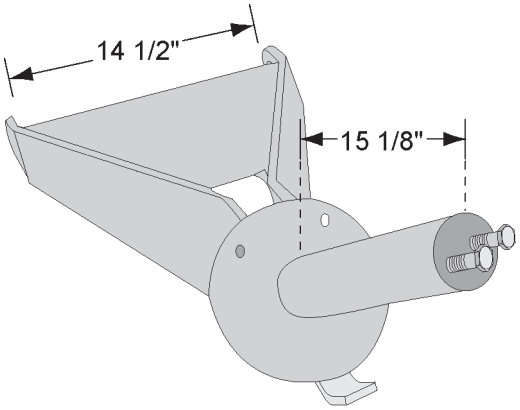

PIVOT ARM ASSY - SWIVEL CHUTE

1255830 MTM MC-38646 LONDON

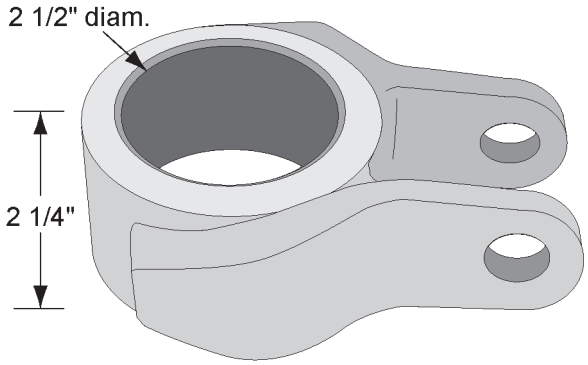

CLEVIS - PIVOT, CHUTE

1255773 MTM MC-32617 LONDON

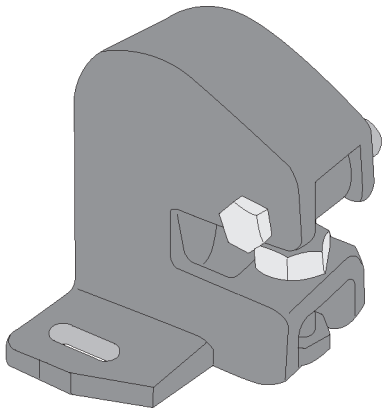

CHUTE - AIR LOCK ASSY

0151310 MTM

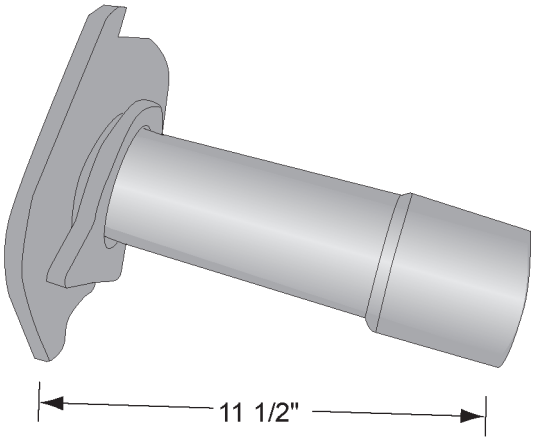

COLUMN - SUPPORT

1255616 MTM MB-39297 LONDON

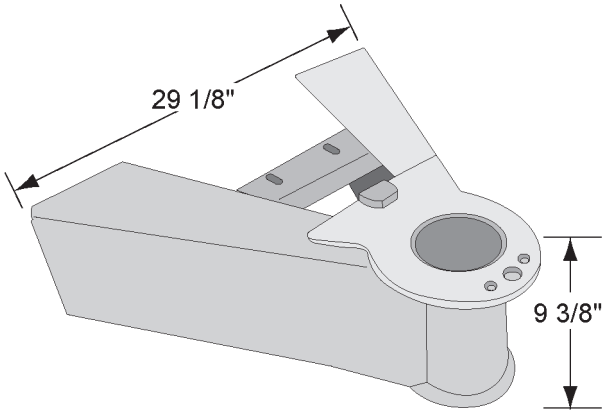

MOUNT - PIVOT (A-FRAME), '93 BRG

0153295 MTM

MTM

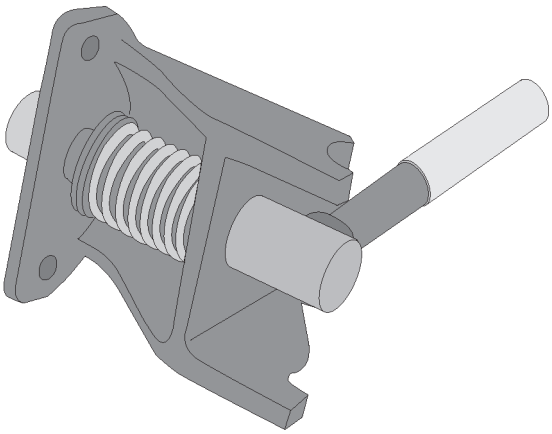

LOCK - PIVOT, CHUTE, 4 3/8" HANDLE

0000259 MTM

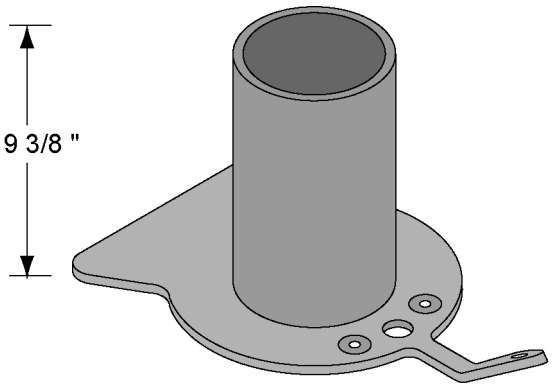

HOUSING - REAR PVT ASSY, BEARING

0152290 MTM

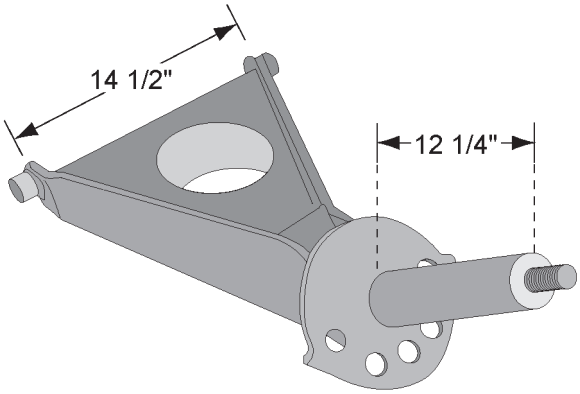

SHAFT - PIVOT, TUCK-AWAY

0150320 MTM

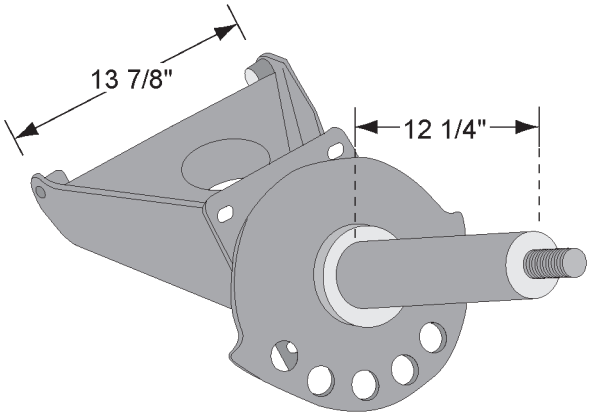

ARM - PIVOT, REAR,96, 7/8" HOLE

0152635 MTM

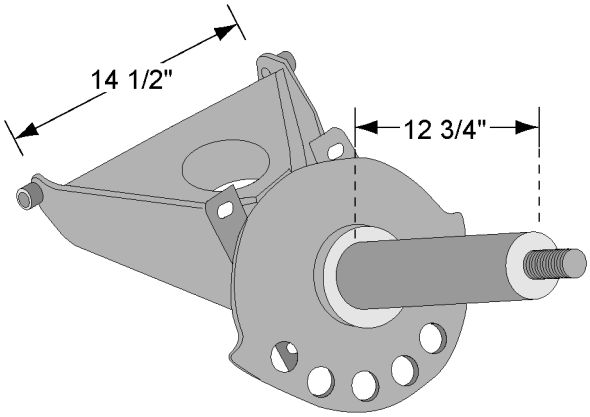

PIVOT - ARM, BRG TYPE, STD

0152305 MTM

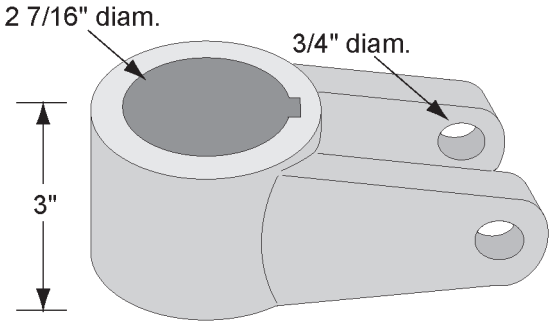

MTM - CHUTE PIVOT CLEVIS 3/4"

0151300 MTM

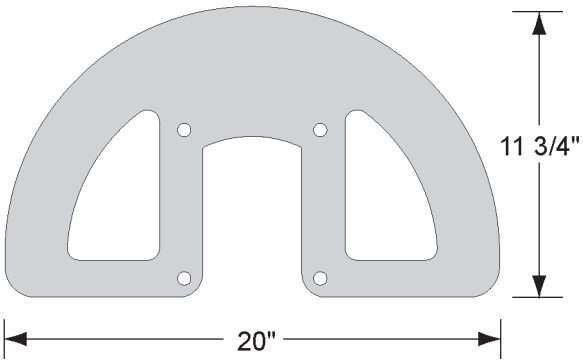

PLATE - CHUTE CLAMP

0151277 MTM

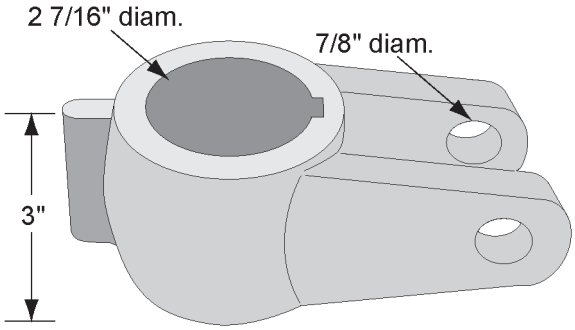

MTM - CHUTE PIVOT CLEVIS 7/8"

0152641 MTM

REX

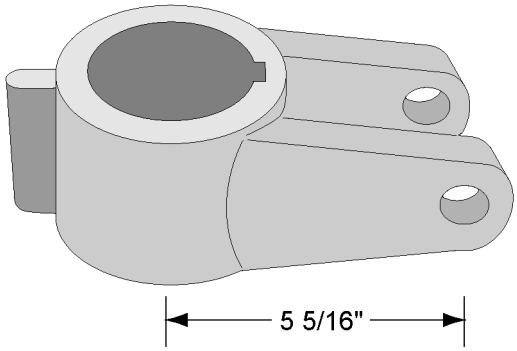

CLEVIS - CHUTE, PIVOT, 12 YD.

0151303 MTM

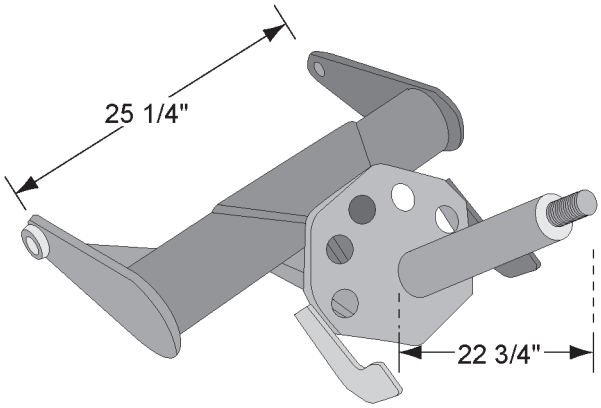

PIVOT - SPOUT XUP

1113016 MTM 502-6883-80 REX

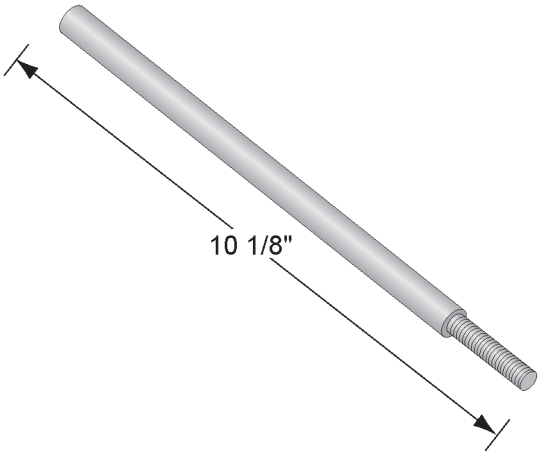

6” - AIR CHUTE LOCK EXTENSION

0181341 MTM

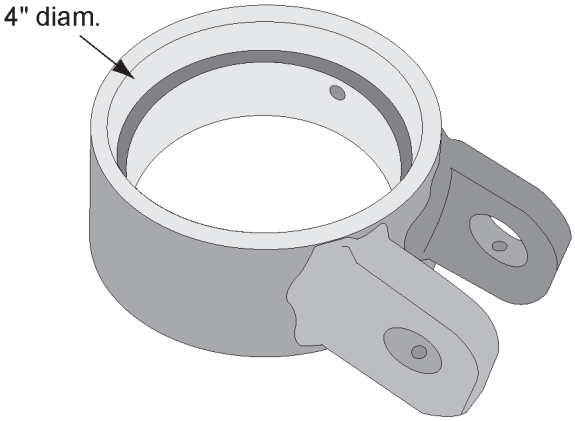

COLLAR - CHUTE PIVOT

1113276 MTM 402-00718-02 REX

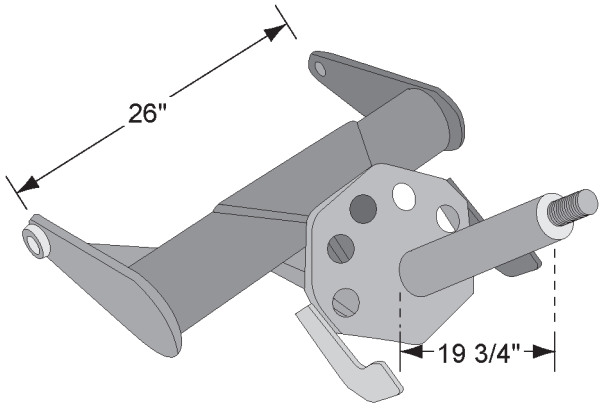

PIVOT - ARM

1113099 MTM 502-20784-80 REX

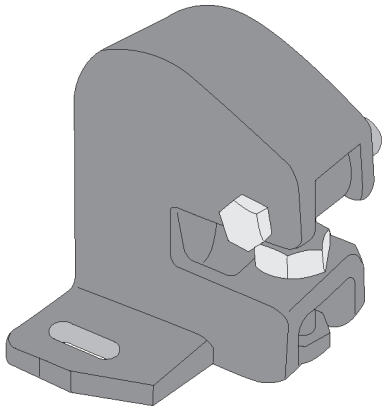

LOCK ASSY - PIVOT

0151310 MTM 30389067 SCHWING

SCHWING

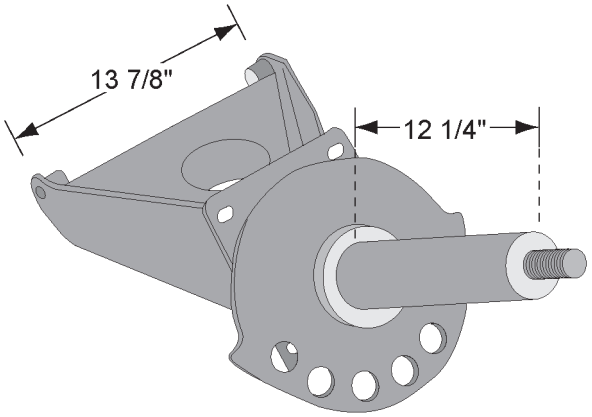

PIVOT - ARM

0152635 MTM 60306104 SCHWING

SMITH

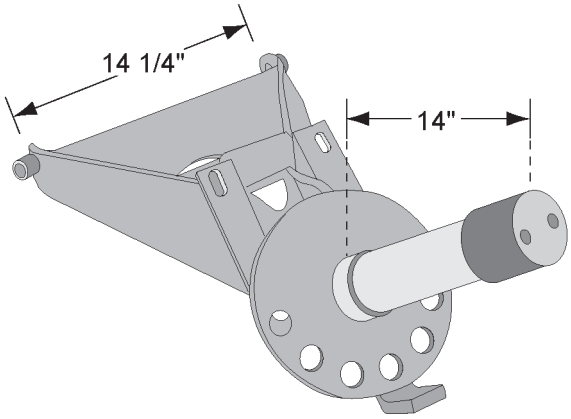

ARM - PIVOT

1110246 MTM 380-43832000 SMITH

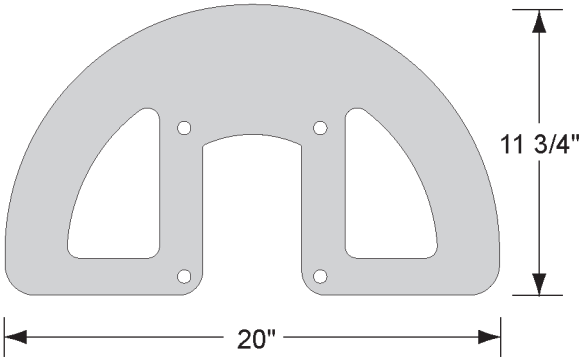

PLATE - CHUTE CLAMP

0151277 MTM 30389055 SCHWING

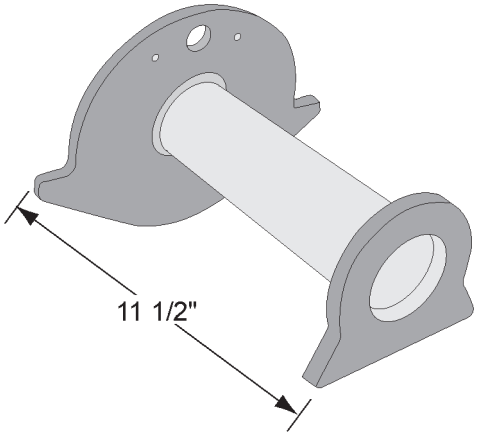

SUPPORT - COLUMN

1111588 MTM 43832008 SMITH

ROCKET

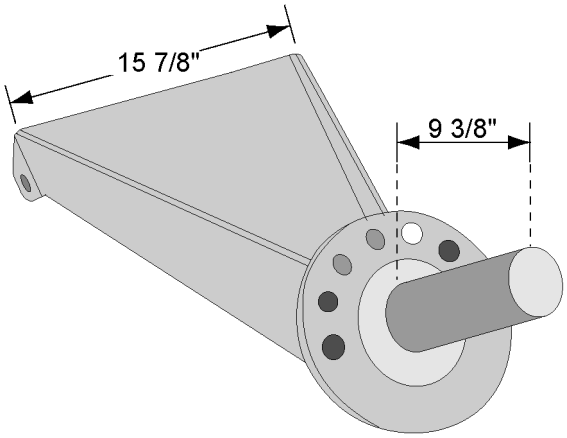

ARM - PIVOT

1110277 MTM 9873 ROCKET

THIS PAGE INTENTIONALLY LEFT BLANK

THIS PAGE INTENTIONALLY LEFT BLANK

Rollers

ADVANCE / TEREX

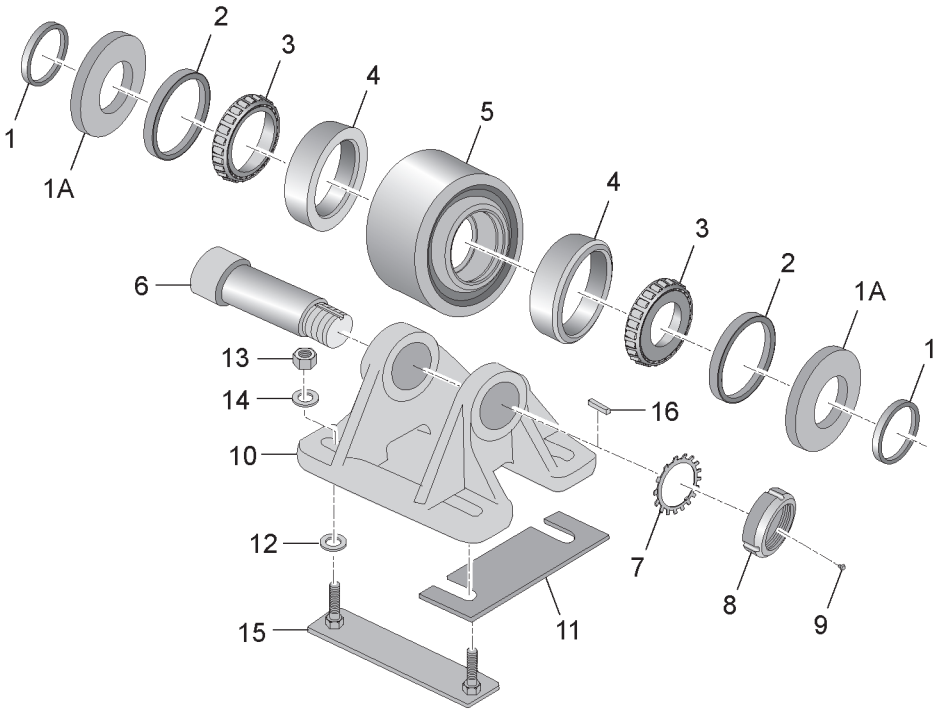

DRUM ROLLER AND COMPONENTS

0150440 MTM		ROLLER ASSEMBLY
0150440 MTM	40830 TEREX	COMPLETE ROLLER ASSEMBLY

Item	MTM Part No.	Description
1.	1477199	RING - ROLLER
1A.	0215258	SEAL - FELT
2.	0215250	SEAL - OIL
3.	0082213	CONE - BEARING
4.	0082214	CUP - BEARING
5.	0150442	ROLLER - BARE, 3-7/8”
6.	0150443	SHAFT - ROLLER, 8”
7.	0082206	WASHER - LOCK, ROLLER
8.	0082216	NUT - LOCK, ROLLER
9.	0115166	FITTING - GREASE, 1/8” NPT
10.	0150441	BRACKET - ROLLER, 1 PIECE
11.	0082218	SHIM
12.	0005365	WASHER - FLAT, HARDENED, 1/2”
13.	0005340	NUT - LOCK, 1/2”
14.	0082219	WASHER - FLAT, 1/2”
15.	0150425	BOLT
16.	0150444	KEY

CBMW

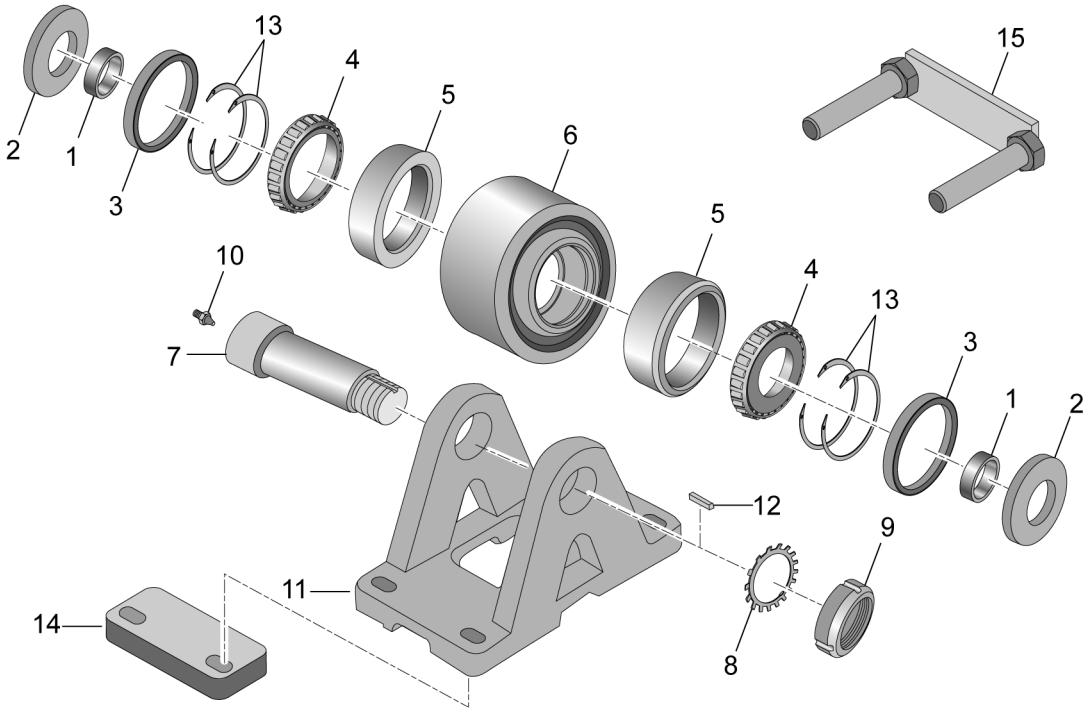

DRUM ROLLER AND COMPONENTS

0016110 MTM 90353000 CBMW ROLLER ASSEMBLY - COMPLETE, WITH BRACKET

Item	MTM Part No.	CBMW Part No.	Description
1.	1166506	50353032	SPACER - 1”
2.	0016104	50353061	SEAL - FELT
3.	0016117	50353023	SEAL - OIL
4.	0016113	50353022	CONE - BEARING
5.	0016112	50353021	CUP - BEARING
6.	0016111	50353001	ROLLER - BARE
7.	0016102	50353031	SHAFT - ROLLER
8.	0082206	10350592	WASHER - LOCK
9.	0082216	10350594	NUT - LOCK
10.	0115166	10000590	FITTING - GREASE
11.	0016118	50353002	BRACKET - ROLLER
12.	0016114	10350038	KEY - ROLLER
13.	0016105	50353024	RING - SNAP
14.	1331437	90353003	SPACER - PLATE
15.	1332158	90353065	STRAP - BOLT, ROLLER, 3”
15.	1332159	90353067	STRAP - BOLT, ROLLER, 2-1/2”
15.	1530007		STRAP - BOLT, ROLLER, 4”

CCB

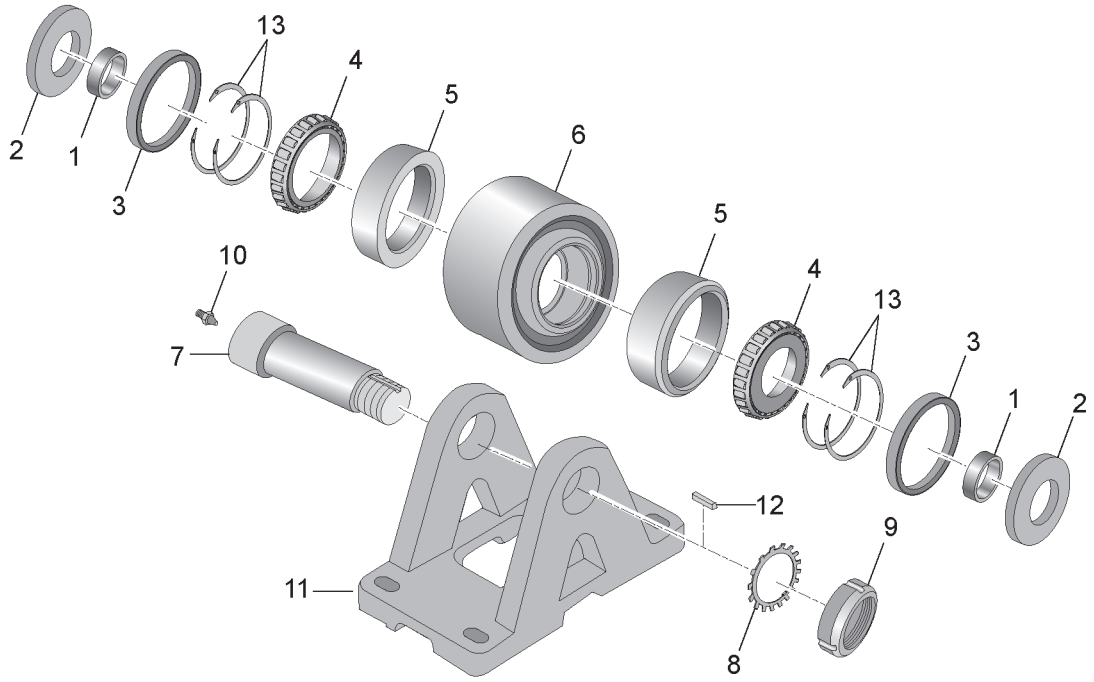

DRUM ROLLER AND COMPONENTS

0016110 MTM	5002358 CCB	ROLLER ASSEMBLY - COMPLETE - W/ BRACKET
0016100 MTM	5022972 CCB	ROLLER - W/BEARING AND SEAL - NO BRACKET

Item	MTM Part No.	CCB Part No.	Description
1.	1166506	5021192	SPACER - 1”
2.	0016104	1690156	SEAL - FELT
3.	0016117	1690157	SEAL - OIL
4.	0016113	1300139	CONE - BEARING
5.	0016112	1300138	CUP - BEARING
6.	0016111	5022900	ROLLER - BARE
7.	0016102	5021191	SHAFT - ROLLER
8.	0082206	1050371	WASHER - LOCK
9.	0082216	1030607	NUT - LOCK
10.	0115166	10000590	FITTING - GREASE
11.	0016118	5022847	BRACKET - ROLLER
12.	0016114	5021193	KEY - ROLLER
13.	0016105	1050372	RING - SNAP

JAEGER

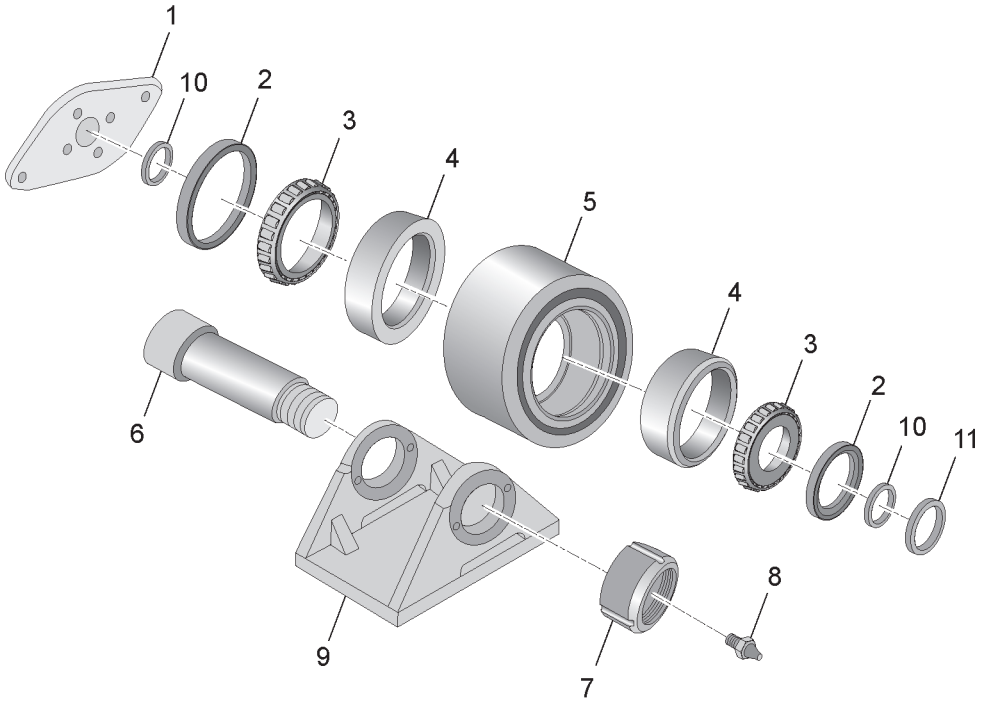

DRUM ROLLER AND COMPONENTS

0036125 MTM	80703-91 JAEGER	ROLLER ASSEMBLY - W/BRACKET
0036129 MTM	80703-91S JAEGER	ROLLER ASSEMBLY

Item	MTM Part No.	Jaeger Part No.	Description
1.	0036128	59150-1	CAP - END
2.	0036135	JCP2614	SEAL - OIL
3.	0036134	JCP2616	CONE - BEARING
4.	0036133	JCP2615	CUP - BEARING
5.	0036130	JCP644	ROLLER - BARE
6.	0036131	JAE80699-1	ROLLER
7.	0005344	JCP4516	NUT - LOCK
8.	0115166	JCP2613	GREASE - FITTING, 1/8”
9.	0036126	59158-1	BRACKET
10.	0036132	80699-1	SPACER - ROLLER
11.	0036127	59152-1	SPACER - ROLLER

KIMBLE

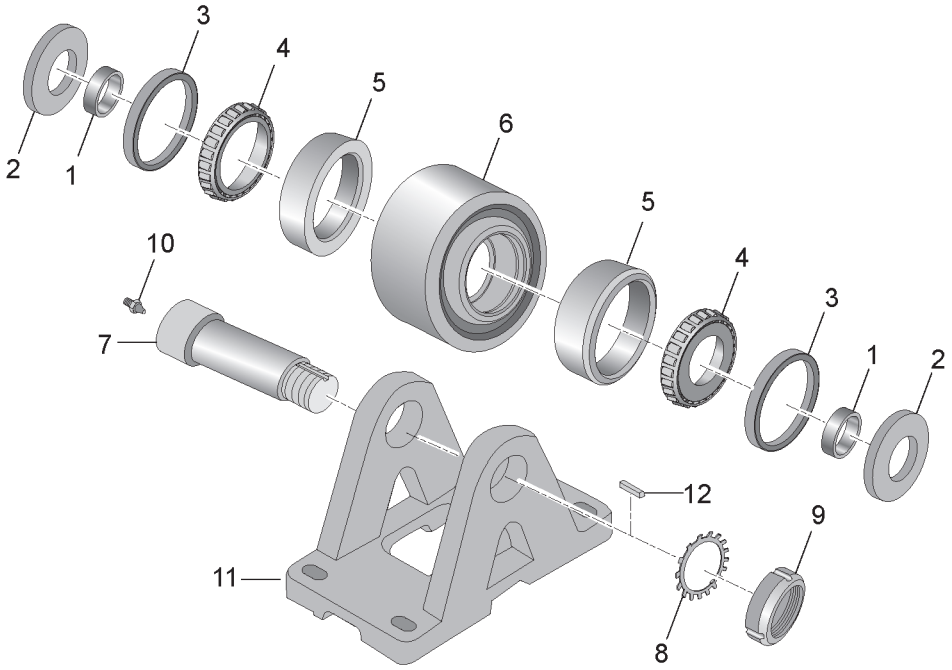

DRUM ROLLER AND COMPONENTS

0016110 MTM S15-000F0-00 KIMBLE ROLLER ASSEMBLY - COMPLETE - W/ BRACKET

Item	MTM Part No.	Kimble Part No.	Description
1.	1166506	S15-000F0-09	SPACER - 1”
2.	0016104	S15-000F0-08	SEAL - FELT
3.	0016117	S15-000F0-12	SEAL - OIL
4.	0016113	S15-000F0-03	CONE - BEARING
5.	0016112	S15-000F0-02	CUP - BEARING
6.	0016111	S15-000N0-01	ROLLER - BARE
7.	0016102	S15-000F0-10	SHAFT - ROLLER
8.	0082206	S15-000F0-06	WASHER - LOCK
9.	0082216	S15-000F0-05	NUT - LOCK
10.	0115166	H62-N0402-00	FITTING - GREASE
11.	0016118	S15-000F0-13	BRACKET
12	0016114	S15-000F0-04	KEY - ROLLER

LONDON

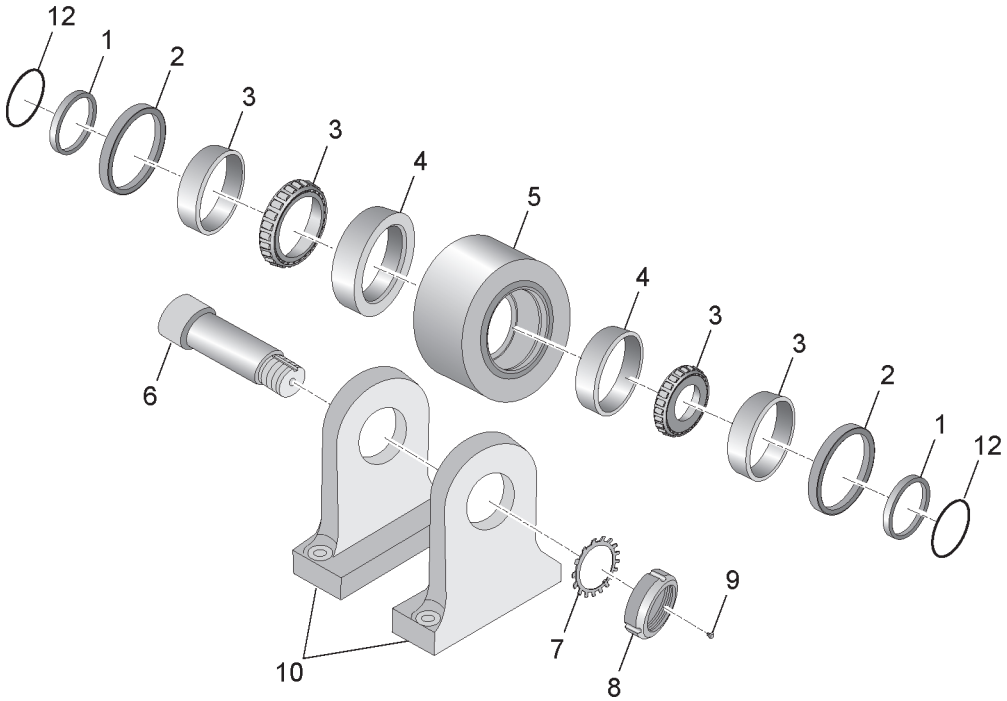

DRUM ROLLER AND COMPONENTS

0067085 MTM	MD-32123-00 LONDON	ROLLER ASSEMBLY - COMPLETE - W/ BRACKET
1110288 MTM	MD-32123-00 LONDON	ROLLER ASSEMBLY - NO BRACKET

Item	MTM Part No.	London Part No.	Description
1.	0067088	HH-00116-053	RING - SEAL
2.	0067089	MM-22769	SEAL
3.	3535453	MM-6607	CONE - BEARING
4.	4GX31	MM-6606	CUP - BEARING
5.	0067081	MC-28852	ROLLER - BARE, 4-3/8”
6.	0067084	MB-29142	SHAFT - ROLLER
7.	0067077	MM-6009	WASHER - LOCK
8.	0067078	MA-6008	NUT - LOCK
9.	0115166	HH-00356-140	FITTING - GREASE
10.	0067082	MD-32089-00	BRACKET
11.	0067076	HH-00104-025	PIN - ROLLER (NOT SHOWN)
12.	0067079	HH-00116-053	O-RING

MTM

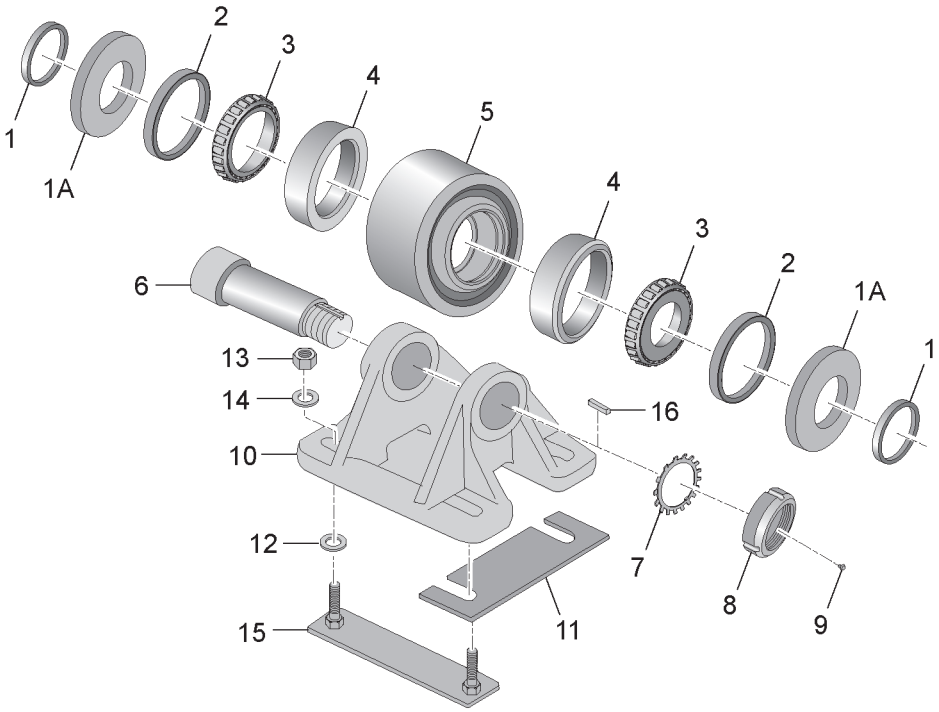

DRUM ROLLER AND COMPONENTS

0150440 MTM ROLLER ASSEMBLY 3-7/8", COMPLETE - W/BRACKET

0157440 MTM ROLLER - W/BEARINGS - NO BRACKET

Item	MTM Part No.	Description
1.	1477199	RING - ROLLER
1A.	0215258	SEAL - FELT
2.	0215250	SEAL - OIL
3.	0082213	CONE - BEARING
4.	0082214	CUP - BEARING
5.	0150442	ROLLER - BARE, 3-7/8"
6.	0150443	SHAFT - ROLLER, 8"
7.	0082206	WASHER - LOCK, ROLLER
8.	0082216	NUT - LOCK, ROLLER
9.	0115166	FITTING - GREASE, 1/8" NPT
10.	0150441	BRACKET - ROLLER, 1PIECE
11.	0082218	SHIM
12.	0005365	WASHER - FLAT, HARDENED, 1/2"
13.	0005340	NUT - LOCK, 1/2"
14.	0082219	WASHER - FLAT, 1/2"
15.	0150425	BOLT
16.	0150444	KEY

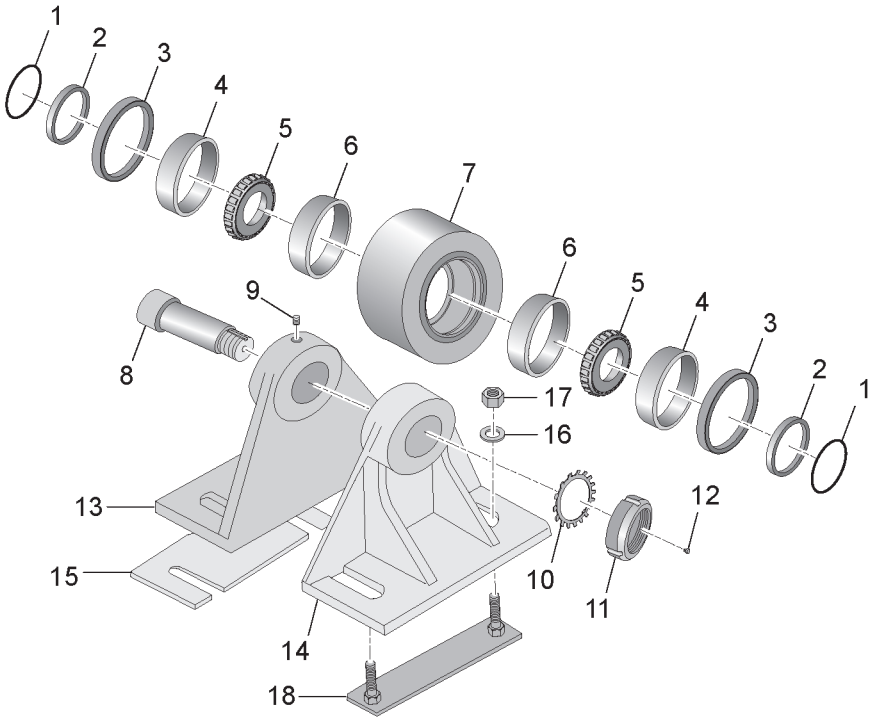

DRUM ROLLER AND COMPONENTS

0082660 MTM ROLLER ASSEMBLY - 3-1/4”

0082665 MTM ROLLER - W/BEARINGS - NO BRACKET

Item	MTM Part No.	Description
1.	0082209	O-RING
2.	0082210	RING - SPACER
3.	0082211	SEAL - GREASE
4.	0082212	RETAINER - SEAL, GREASE
5.	0082213	CONE - BEARING
6.	0082214	CUP - BEARING
7.	0082201	SHAFT - BARE
8.	0082203	SHAFT - ROLLER, 7-3/4”
9.	0082215	SET SCREW
10.	0082206	WASHER - LOCK
11.	0082216	NUT - LOCK
12.	0115166	FITTING - GREASE
13.	0082661	BRACKET - TALL, W/HOLE
14.	0082662	BRACKET - TALL, NO HOLE
15.	0082218	SHIM - ROLLER
16.	0082219	WASHER - FLAT, 1/2”
17.	0005340	NUT - LOCK, 1/2”
18.	0082663	BOLT ASSEMBLY - MOUNTING

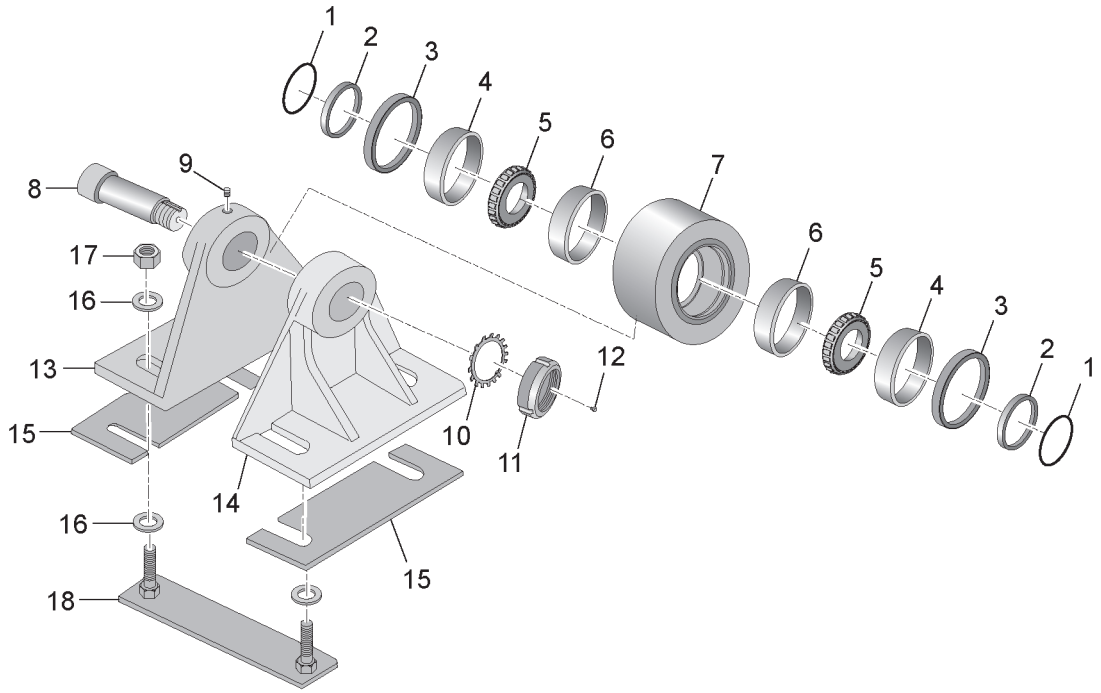

DRUM ROLLER AND COMPONENTS

0082667 MTM ROLLER ASSEMBLY - 4-1/4”

0082666 MTM ROLLER - W/BEARINGS - NO BRACKET

Item	MTM Part No.	Description
1.	0082209	O-RING
2.	0082210	RING - SPACER
3.	0082211	SEAL - GREASE
4.	0082212	RETAINER - SEAL, GREASE
5.	0082213	CONE - BEARING
6.	0082214	CUP - BEARING
7.	0082201	SHAFT - BARE
8.	0082203	SHAFT - ROLLER, 7-3/4”
9.	0082215	SET SCREW
10.	0082206	WASHER - LOCK
11.	0082216	NUT - LOCK
12.	0115166	FITTING - GREASE
13.	0082661	BRACKET - TALL, W/HOLE
14.	0082662	BRACKET - TALL, NO HOLE
15.	0082218	SHIM - ROLLER
16.	0082219	WASHER - FLAT, 1/2”
17.	0005340	NUT - LOCK, 1/2”
18.	0082664	BOLT ASSEMBLY - MOUNTING

REX

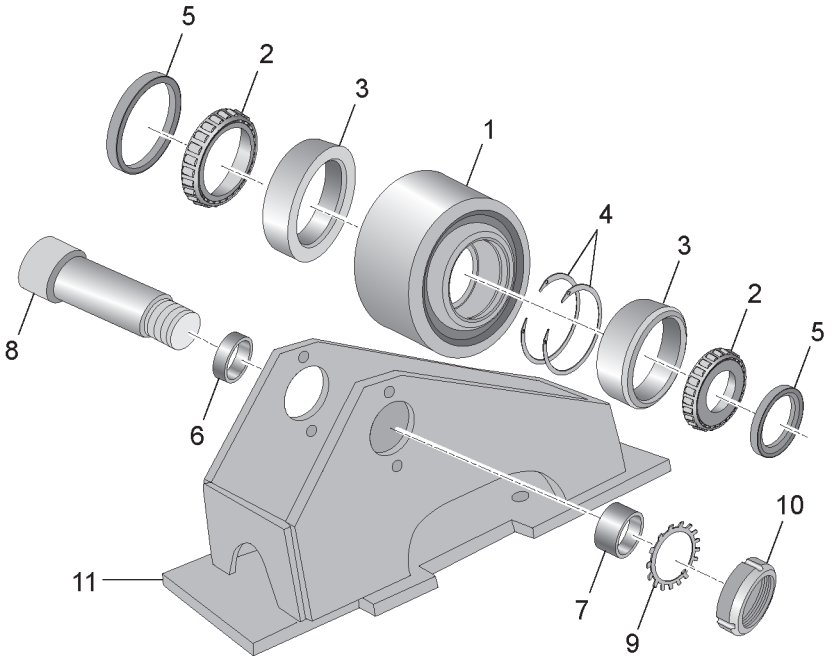

DRUM ROLLER AND COMPONENTS

0046214 MTM 6020502601 REX ROLLER ASSEMBLY - W/BEARINGS, RUBBER SEALS - NO BRACKET

Item	MTM Part No.	Rex Part No.	Description
1.	0046201	4020163102	ROLLER - BARE
2.	0045285	7649	CONE - BEARING
3.	0045285	2980020002	CUP - BEARING
4.	0046206	2980751134	RING - SNAP (2 PER ASSY)
5.	0046208	2980020102	SEAL - ROLLER
6.	1166772	1020651001	SPACER - SHAFT, SHORT, 1-1/16”
7.	1166771	1020651101	SPACER - SHAFT, LONG, 1-5/8”
8.	0046202	5020239680	SHAFT - ROLLER
9.	1182866	3982000031	WASHER - ROLLER, 1.5”
10.	0046209	202866	NUT - LOCK
11.	1114386	5020498580	BRACKET - ROLLER

SCHWING

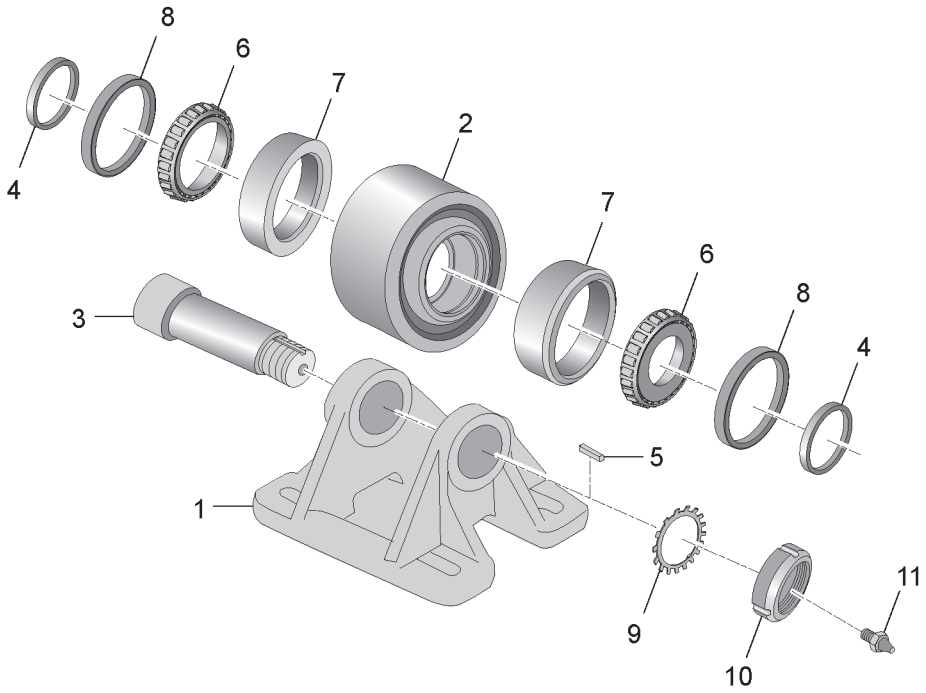

DRUM ROLLER AND COMPONENTS

0150440 MTM 60306129 SCHWING ROLLER ASSEMBLY - 4-1/4”

Item	MTM Part No.	Schwing Part No.	Description
1.	0150425	60306130	BRACKET
2.	0150442	60306835	ROLLER - BARE, 3-7/8”
3.	0150443	60306836	SHAFT
4.	1477199	60306189	SPACER
5.	0150444	60306837	KEY
6.	0082213	30389007	CONE - BEARING
7.	0082214	30389008	CUP - BEARING
8.	0215250	30389383	SEAL - OIL
9.	0082206	60306838	WASHER - LOCK
10.	0082216	60104471	NUT - LOCK
11.	0115166	10007886	ZERK - GREASE

SMITH

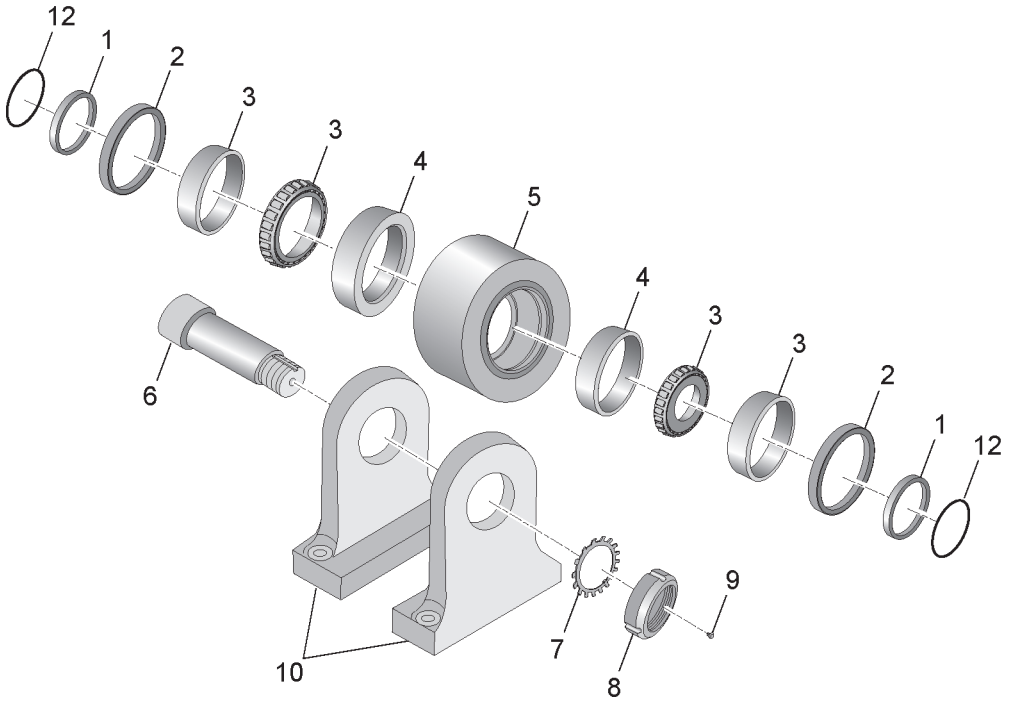

DRUM ROLLER AND COMPONENTS

0067085 MTM	32123-00 SMITH	ROLLER ASSEMBLY - COMPLETE W/BRACKET
1110288 MTM	32123SUB SMITH	ROLLER ASSEMBLY - NO BRACKET

Item	MTM Part No.	Smith Part No.	Description
1.	0067088	0116053	RING - SEAL
2.	0067089	22769	SEAL
3.	3535453	6007	CONE - BEARING
4.	4GX31	6006	CUP - BEARING
5.	0067081	28852	ROLLER - BARE, 4-3/8”
6.	0067084	29142B	SHAFT - ROLLER
7.	0067077	6009	WASHER - LOCK
8.	0067078	6008	NUT - LOCK
9.	0115166	HH-00356-140	FITTING - GREASE
10.	0067082	32089	BRACKET
11.	0067076	104020	PIN - ROLLER (NOT SHOWN)
12.	0067079	116053	O-RING

THIS PAGE INTENTIONALLY LEFT BLANK

Bibs, Boots, Wipers

ADVANCE / TEREX

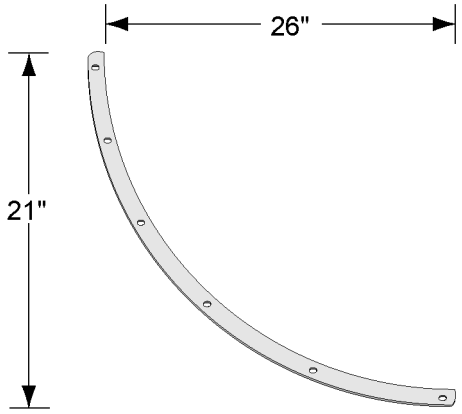

STRAP - RETAINER, DRUM WIPER

1226472 MTM 17044 ADV

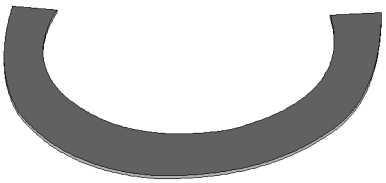

WIPER - DRUM, 1 PIECE STYLE

1142326 MTM 23236 ADV

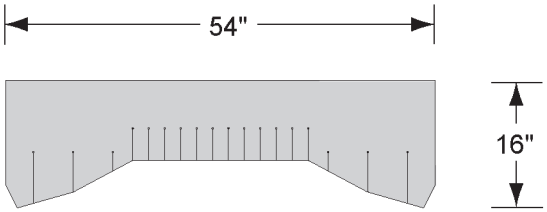

BOOT - COLLECTOR, CHUTE

0115236 MTM 40354 TEREX

1140780 MTM 40354 TEREX

CBMW

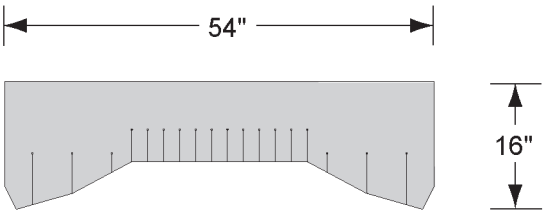

BOOT - COLLECTOR, CHUTE

0115236 MTM 80550136 CBMW

1140780 MTM 80550136 CBMW

NOTE: PN 1140780 is Polyurethane. Can be crossed to OEM # 800550425.

CCB

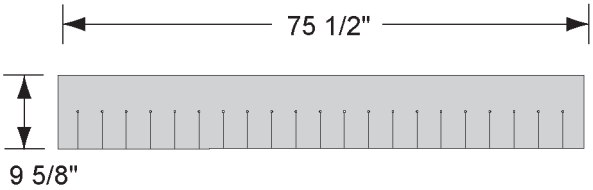

BIB - COLLECTOR, CHUTE BOOT

0016410 MTM 1320495 CCB

CLAMP - BIB

0016381 MTM 1050506 CCB

CLAMP - BIB

0016382 MTM 1050507 CCB

CLAMP - BIB, T-BOLT, 25.86”

1330826 MTM C55-02586-00 KIMBLE

KIMBLE

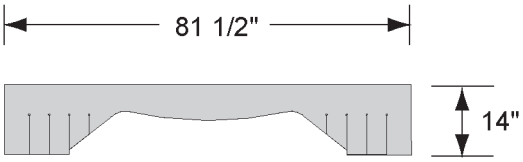

BIB - COLLECTOR

1329073 MTM S08-00860-00 KIMBLE

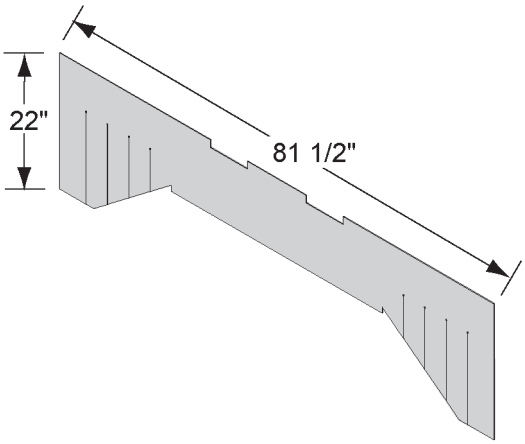

BIB - COLLECTOR, 11 YD

1330827 MTM S42-00011-00 KIMBLE

LONDON

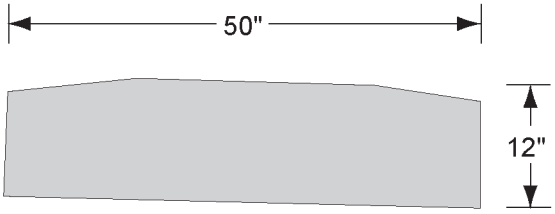

DISCHARGE HOPPER RUBBER

1255534 MTM MB-29376 LONDON

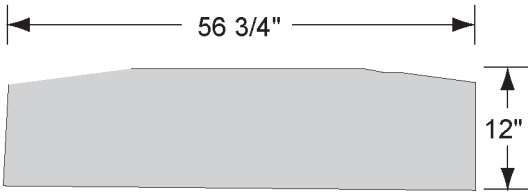

DISCHARGE HOPPER RUBBER-PVR

1255592 MTM MB-38566 LONDON

MTM

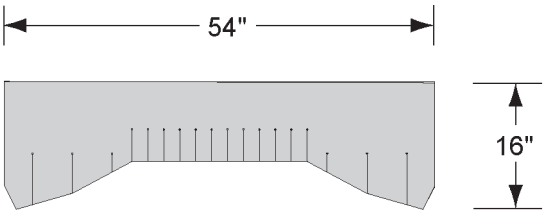

BIB - COLLECTOR, TYPE 3 POLY

1140780 MTM

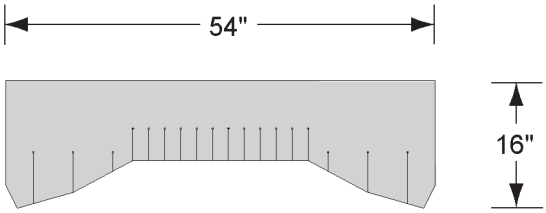

BIB - COLLECTOR, TYPE 3, RUBBER

0115236 MTM

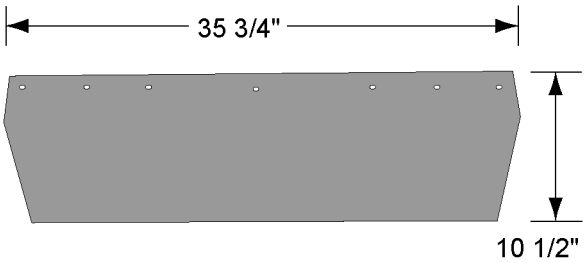

BIB - CHUTE, COLLECTOR, TYPE II

0082087 MTM

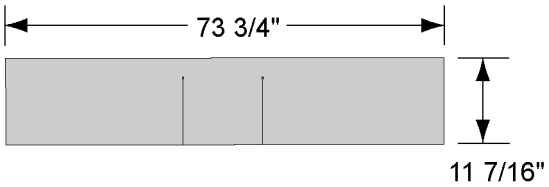

BIB - COLLECTOR, BMII

1167416 MTM

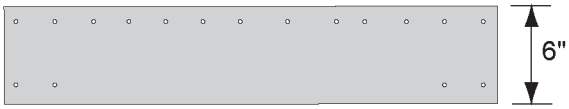

BIB - COLLECTOR, BMII

1167415 MTM

REX

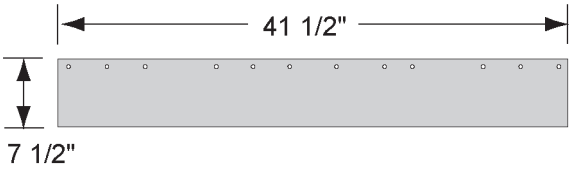

BIB - REX, MK, COLLECTION HOPPER

0044047 MTM 102-03800-01 REX

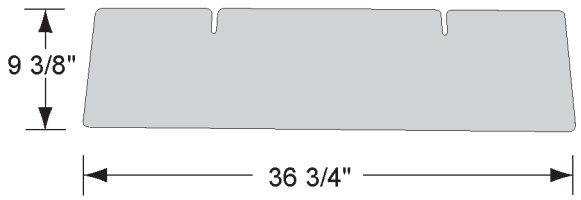

BIB - REX, XF, DISCHARGE HOPPER

0044048 MTM 85632-1 REX

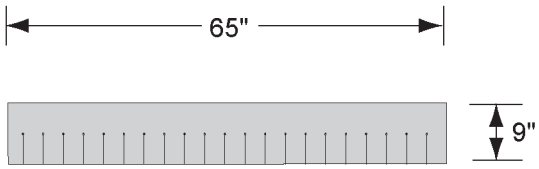

BIB - COLLECTOR, XUP

1112855 MTM 102-50001-03 REX

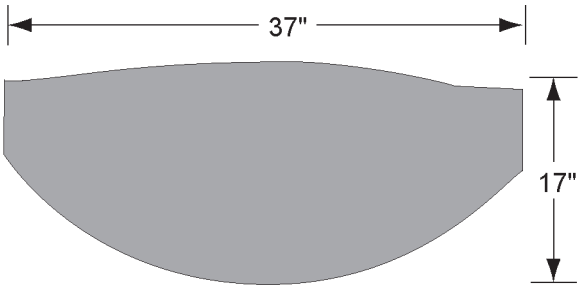

BIB - HOPPER, COLLECTOR

0044049 MTM 102-04934-01 REX

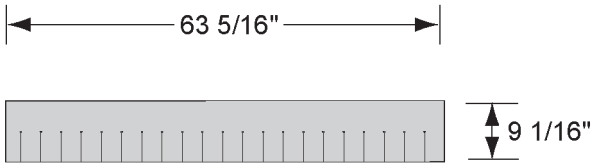

BIB - REX, XJR/XJK, 9”

1112756 MTM 102-31805-01 REX

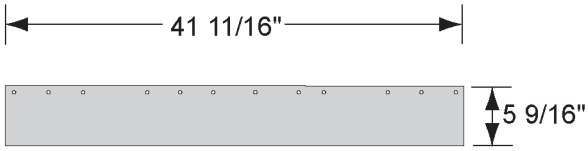

BIB - HOPPER, DISCHARGE, RUBBER, MKIII

1112905 MTM 102-31751-01 REX

SCHWING

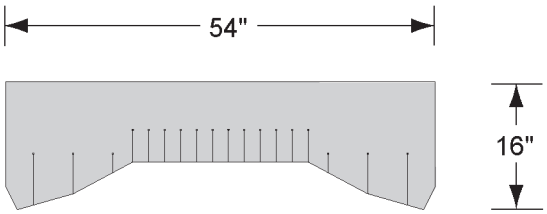

BOOT - COLLECTOR, CHUTE

0115236 MTM 30389035 SCHWING

1140780 MTM 30389035 SCHWING

SMITH

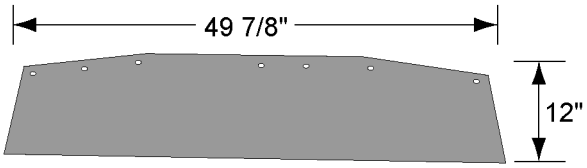

BIB - COLLECTOR

1111049 MTM MB-29372 SMITH

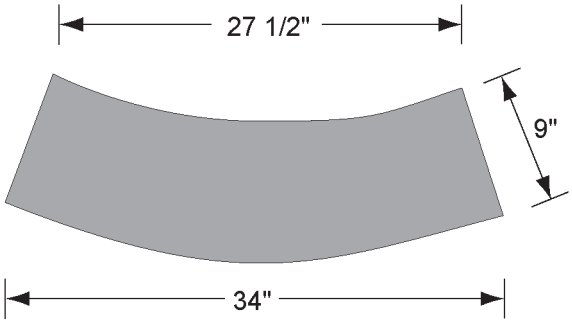

BIB - HOPPER, CHARGE

0067001 MTM XM-00071-000 SMITH

THIS PAGE INTENTIONALLY LEFT BLANK

THIS PAGE INTENTIONALLY LEFT BLANK

Electrical and Controls

ADVANCE / TEREX

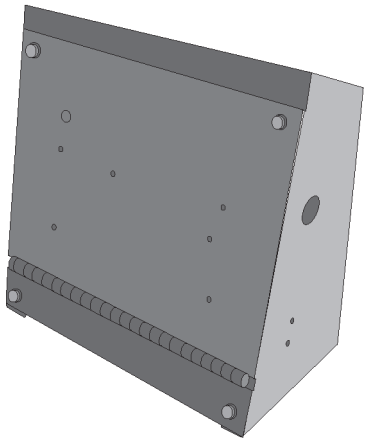

BOX - CONTROL, CAB, W/O HANDLE

0153902 MTM

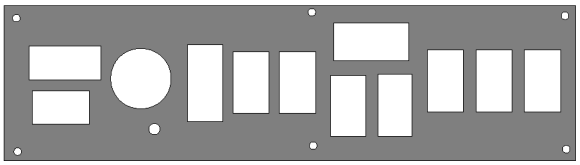

PLATE - CAB BOX, STANDARD

0153952 MTM

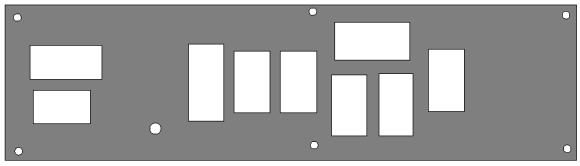

PLATE - CAB BOX, BM

0153951 MTM

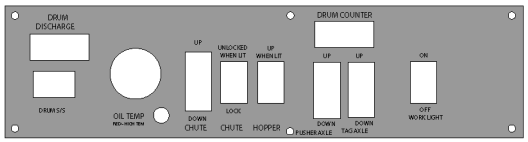

DECAL - IN CAB BOX, STANDARD

1132222 MTM

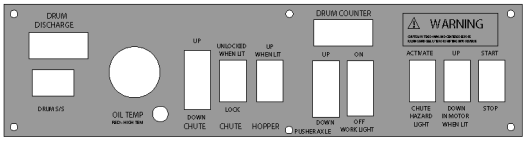

DECAL - IN CAB BOX, BM

1132220 MTM

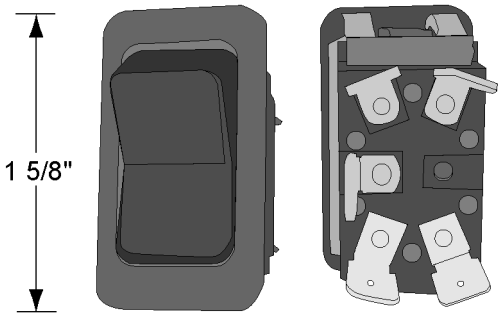

SWITCH - ROCKER, ON/OFF, w/2 RED LENS

1131894 MTM

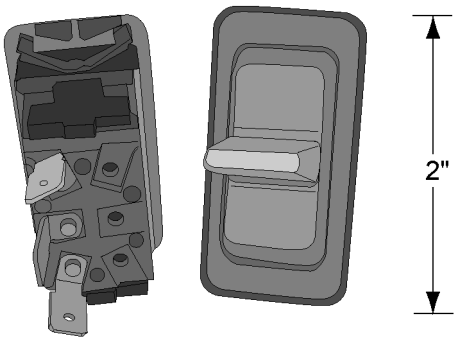

SWITCH - PADDLE, SELF CENTERING

1131897 MTM

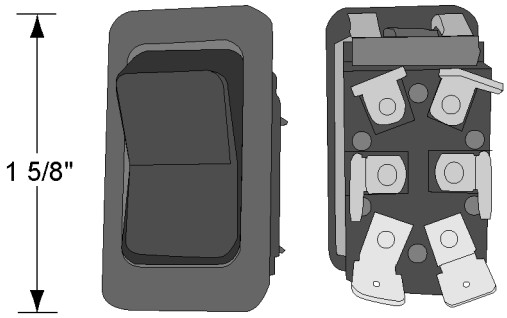

SWITCH - DOUBLE MOMENTARY, w/2 RED LENS

1131895 MTM

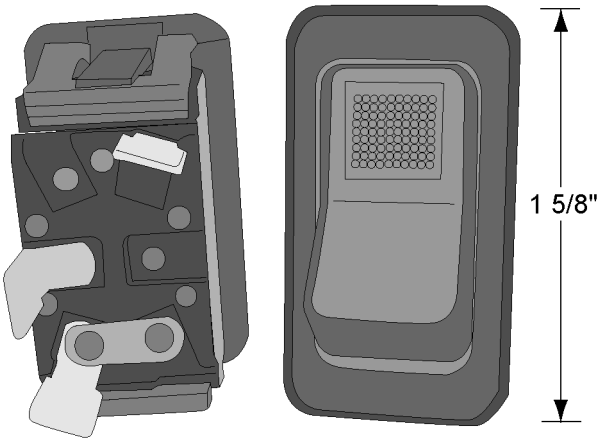

SWITCH - ROCKER, ON/OFF, w/GRN LENS

1131888 MTM

COUNTER - DRUM, DIGITAL

1429581 MTM

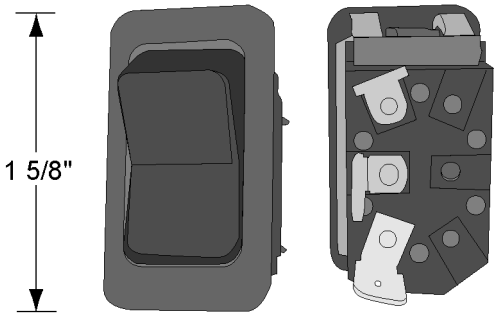

SWITCH - DOUBLE MOMENTARY

1131896 MTM

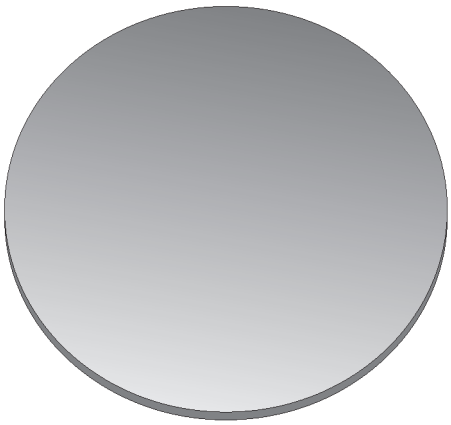

PLUG - GAUGE, 1-5/8" HOLE

0110133 MTM

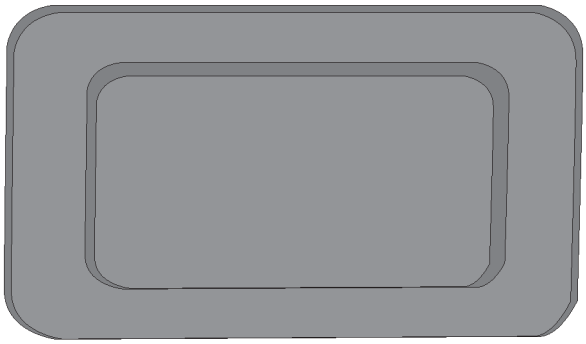

BEZEL - BLANK 11-96

0110150 MTM

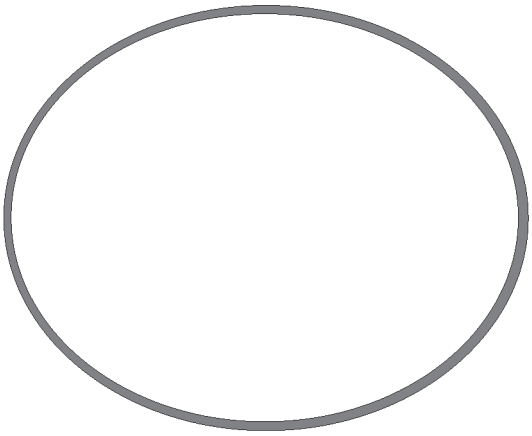

O-RING FOR 0110233 PENDANT

0110234 MTM

LIGHT - MULTI-COLORED, 2V

0128409 MTM

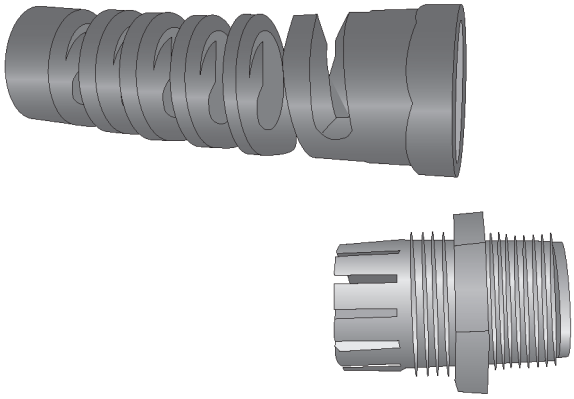

STRAIN RELIEF - 3/4", w/FLEX TAIL

0110205 MTM

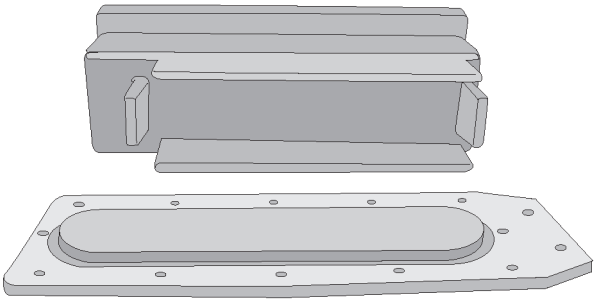

REAR PENDANT 1-6 '96 MODEL

0110233 MTM

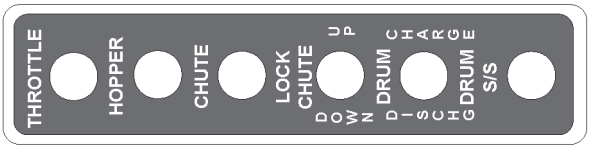

PLACKARD - MTM, 6 HOLE PENDANT

0214652 MTM

CBMW

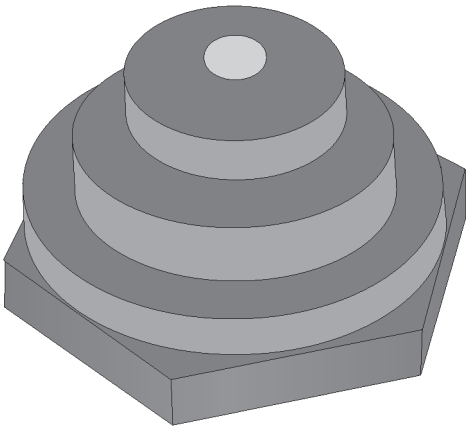

GUARD - SWITCH, RUBBER

0110194 MTM

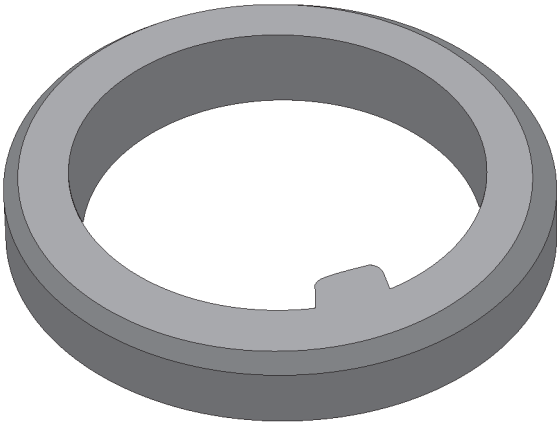

WASHER - SEALED, TOGGLE SWITCH

0123001 MTM

PENDANT - REAR

1329126 MTM

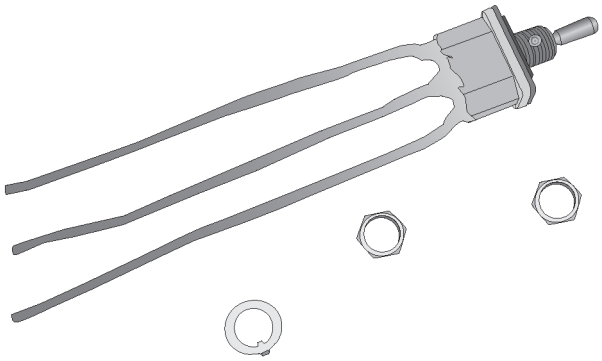

SWITCH - TOGGLE, SELF CENTER, w/PIGTAILS

0085693 MTM 10801815 CBMW

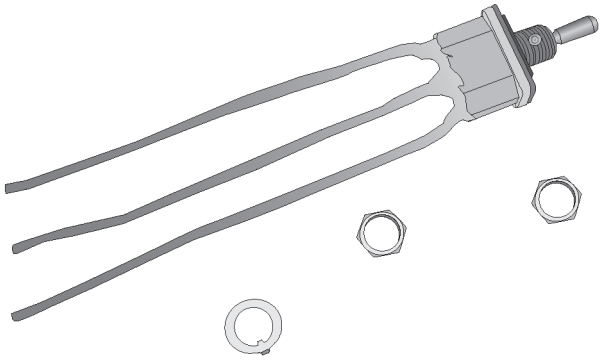

SWITCH - TOGGLE, ON/OFF, w/PIGTAIL

1166275 MTM 10801810 CBMW

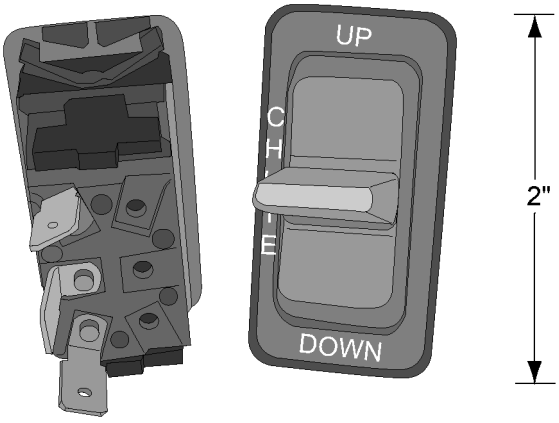

SWITCH - ROCKER, PADDLE, 3 PRONG

0110255 MTM 10802213 CBMW

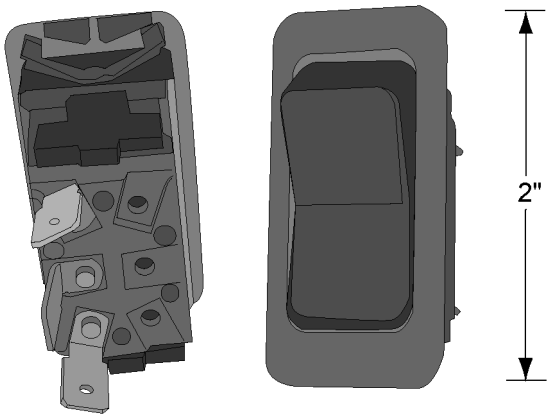

SWITCH - ROCKER, SELF CENTER, 3 PRONG

0110113 MTM 10802203 CBMW

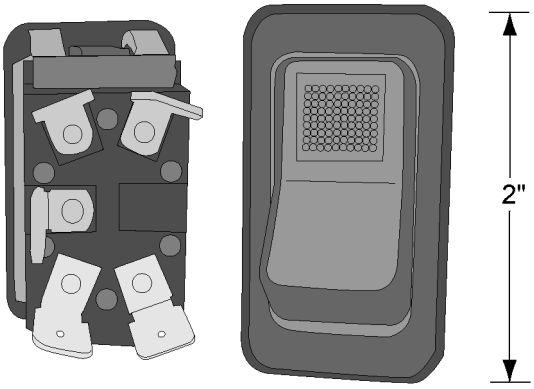

SWITCH - RED/RED, 5 PRONG

0110114 MTM 10802215 CBMW

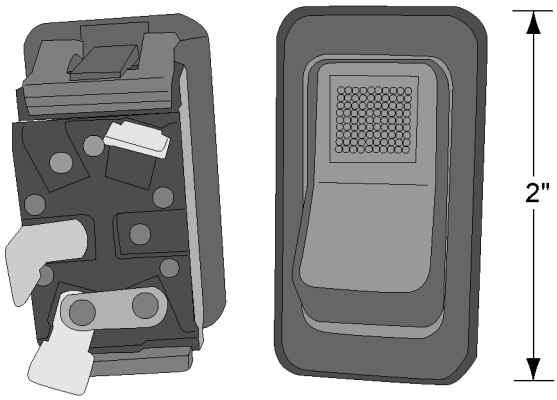

SWITCH - ROCKER, ON/OFF, RED

0110116 MTM 10802214 CBMW

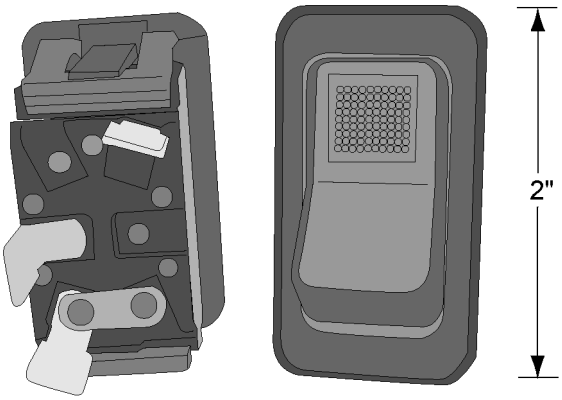

SWITCH - LIGHT, ON/OFF, GREEN

0110115 MTM 10802215 CBMW
36312 BECK

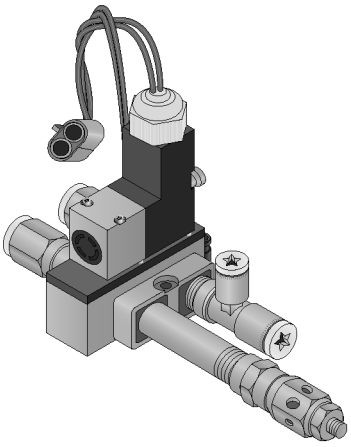

VALVE - SOLENOID, AIR HOPPER

0085288 MTM 80105734 CBMW

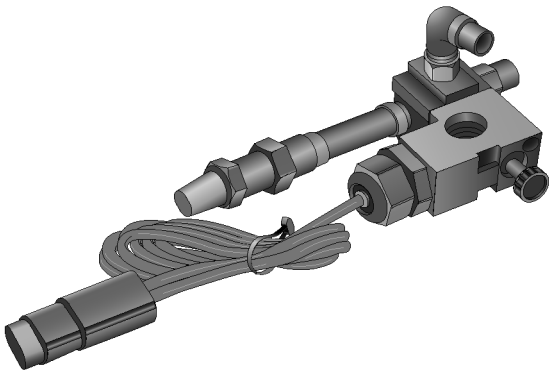

VALVE - SOLENOID, CHUTE LOCK

0085284 MTM 80105735 CBMW

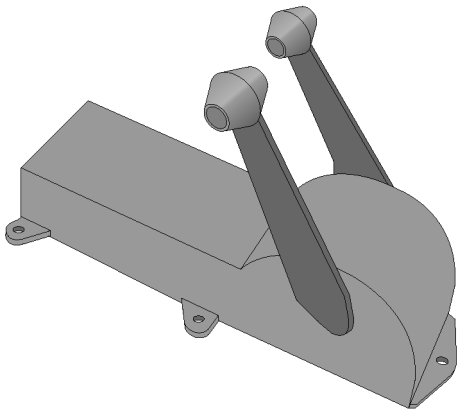

CONTROL BOX - REAR, DBL HDL, 4”

0016550 MTM 50412100 CBMW

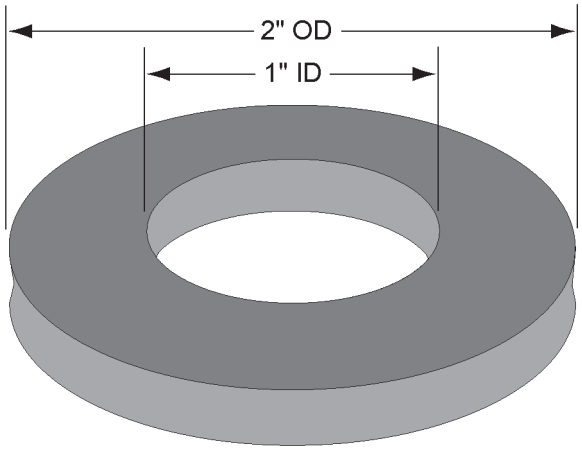

WASHER - RUBBER

0016378 MTM 50412104 CBMW

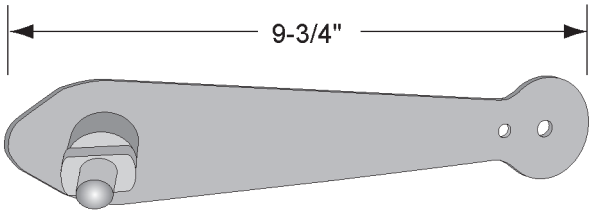

LEVER - N/S R CONT, W/PIN

0016437 MTM CBMW

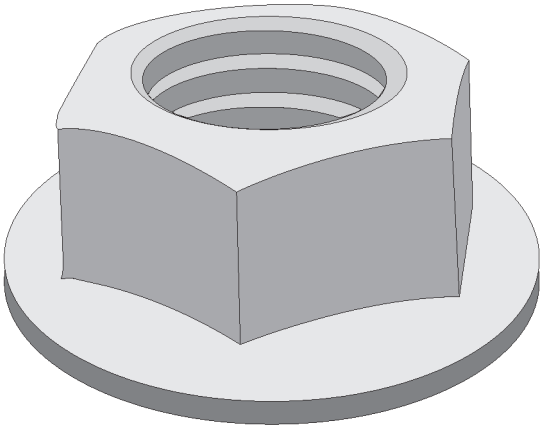

1/2” FLG LOCKNUT FOR CONT LVR

0120201 MTM 50412108 CBMW

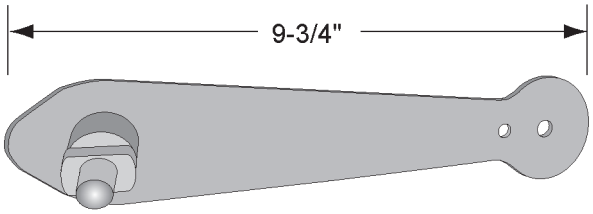

WASHER - LARGE, REAR CONT BOX

0016375 MTM

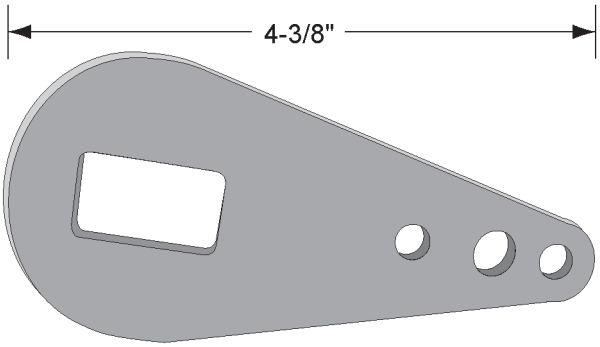

LEVER - CONTROL N/S INNER

0016439 MTM 50412106 CBMW

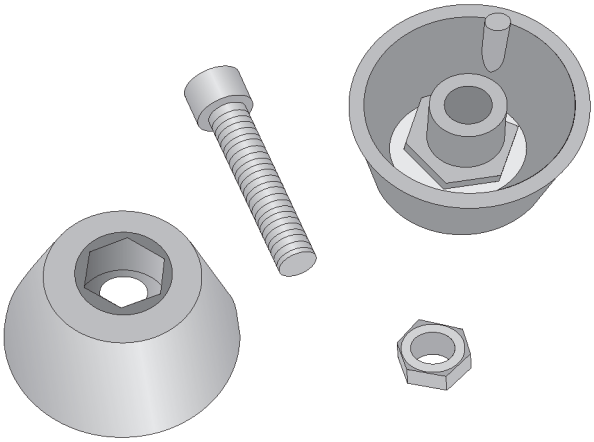

RED KNOB KIT(BOLT/NUT/2HALVES)

0016553 MTM 80412124 CBMW

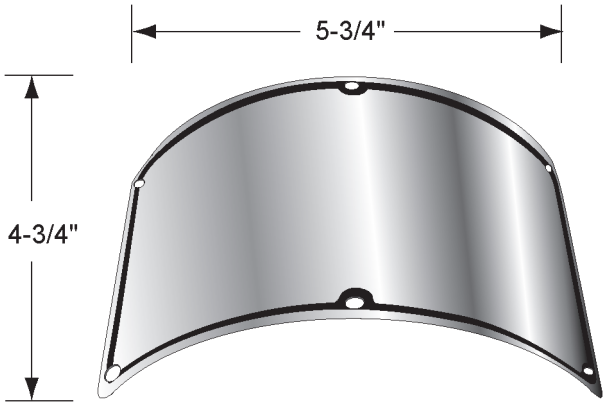

PLATE - COVER, CHA R CONTROL

0016908 MTM 1090495 CCB

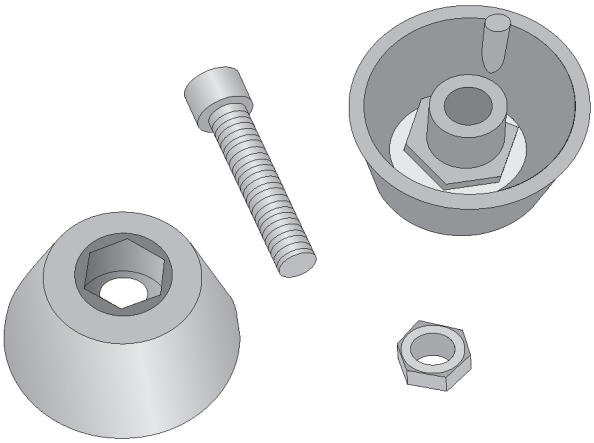

GRN KNOB KIT(BOLT/NUT/2HALVES)

0016552 MTM 80412125 CBMW

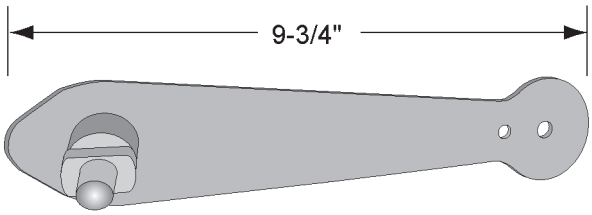

LEVER - CHA N/S R CONT, w/PIN

0016437 MTM 5010884 CCB

CCB

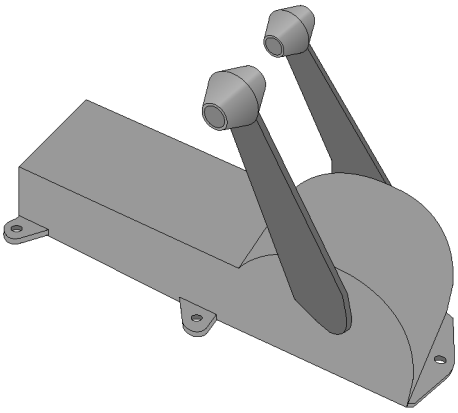

CONTROL BOX - REAR, DBL HDL, 4" CH

0016550 MTM 5010866 CCB

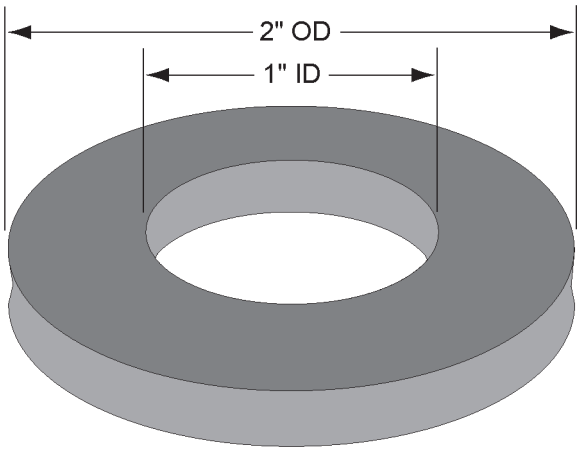

WASHER - RUBBER, CHA

0016378 MTM 1320441 CCB

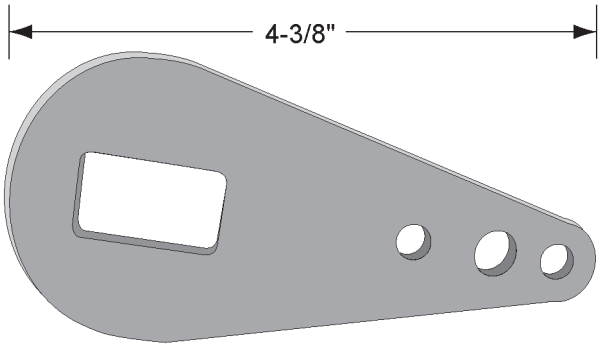

LEVER - CONTROL, CHA N/S R, INNER

0016439 MTM 1400311 CCB

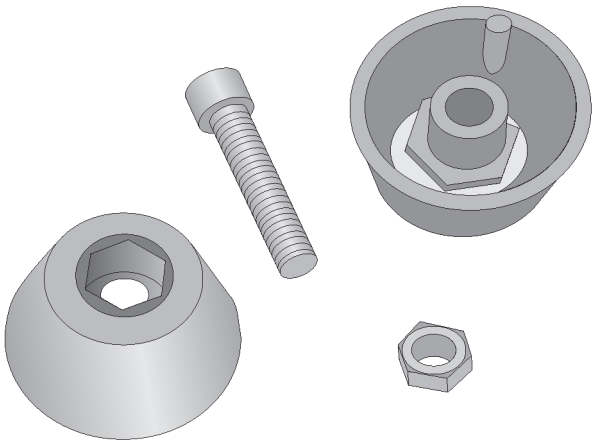

KIT - KNOB, RED (BOLT/NUTS/2 HALVES)

0016553 MTM 1010409 CCB

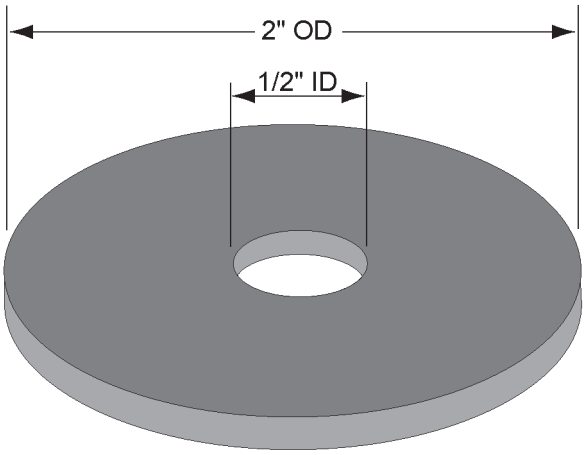

WASHER - LARGE, CHA R CONTROL BOX

0016375 MTM 1050503 CCB

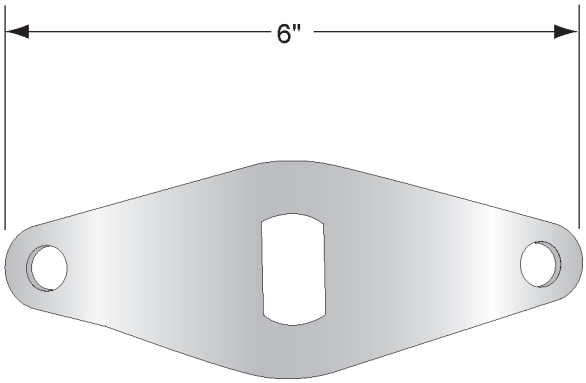

CONTROL ARM - N/S IN CAB

0016395 MTM 1400469 CCB

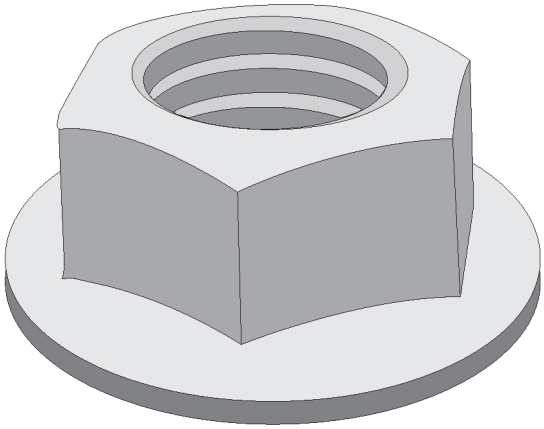

LOCKNUT - FLANGE, 1/2" FOR CONTROL LEVER

0120201 MTM 1031690 CCB

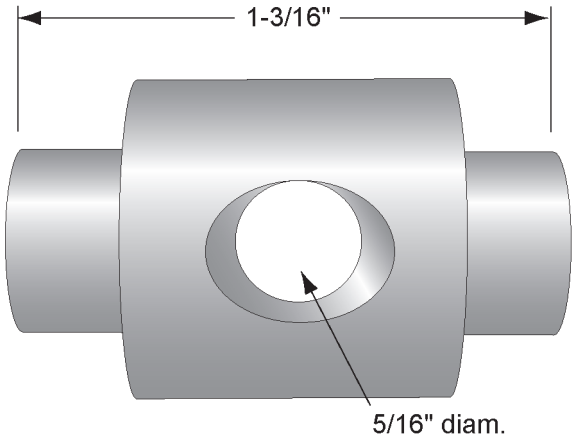

TRUNNION - 5/16"-24

0015336 MTM 5011143 CCB

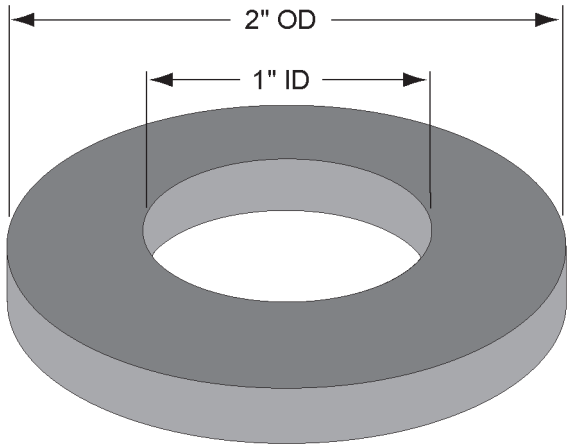

SPACER

0015335 MTM 5011142 CCB

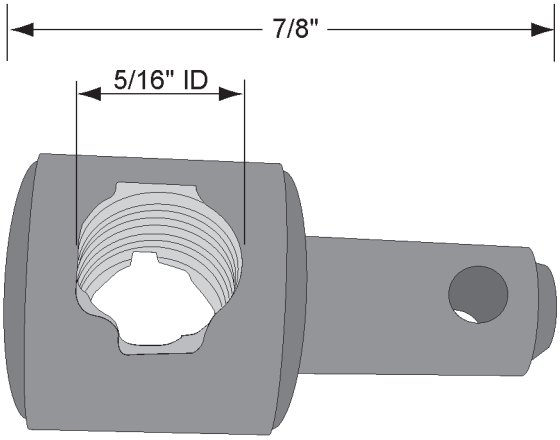

PIVOT END - CABLE, CHA 5/16”

0016435 MTM 5010697 CCB

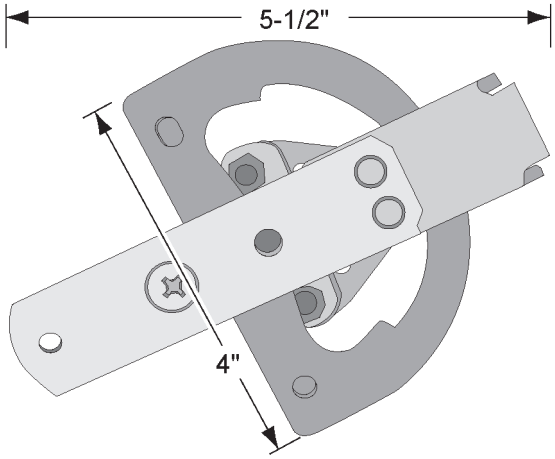

CONTROL - QUADRASTAT F, CHA

0016551 MTM 1920259 CCB

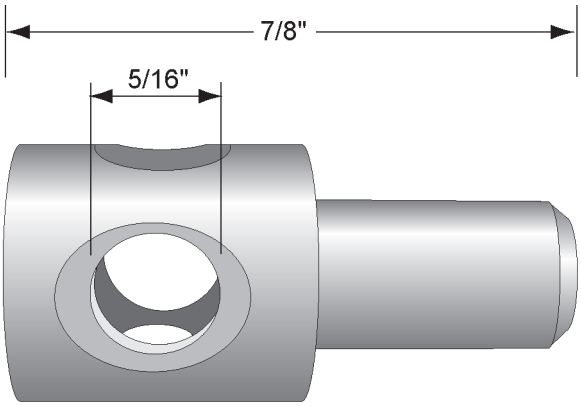

PIVOT END - CABLE, CHA 1/4”

0115851 MTM 5010878 CCB

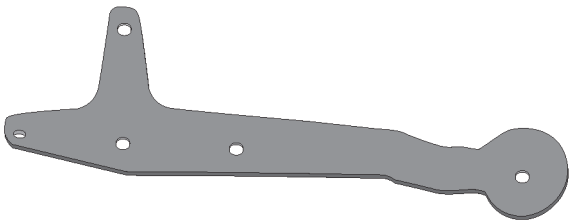

ARM - CONTROL, CHA

0015325 MTM 5011308 CCB

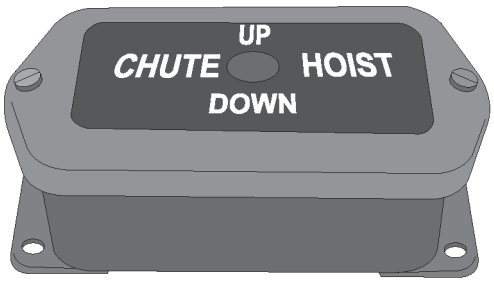

BOX - SWITCH, CHA

0014848 MTM 5090223 CCB

RELAY - NEWARK, # 60F2669

0014779 MTM 1710937 CCB

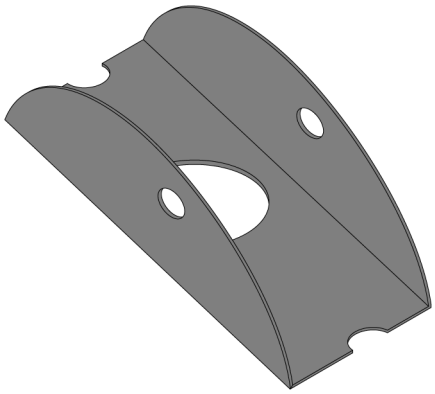

SWITCH - GUARD

0014759 MTM 1720187 CCB

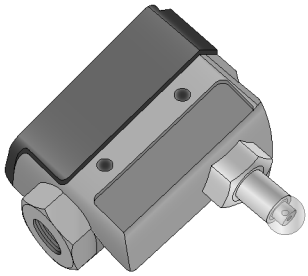

SWITCH - LOAD, 5LS1

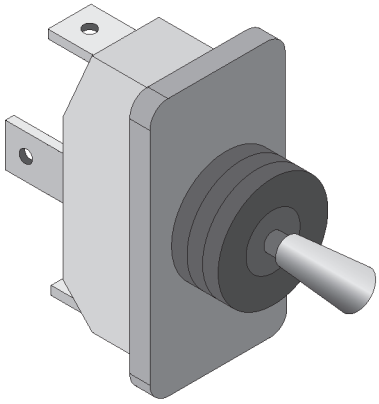

SWITCH - ON/OFF/ON

0082446 MTM 1710035 CCB

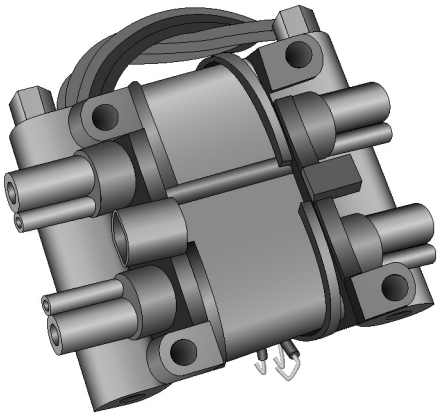

VALVE - SKINNER O/S, CHA BAL

0016513 MTM 1520541 CCB

BOX - JUNCTION, 20708

0014106 MTM 1721865 CCB

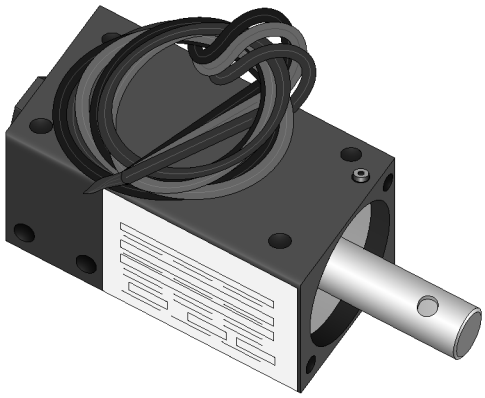

SWITCH - PRESS, CHA, 96100-BB2-AC

0014785 MTM 1711211 CCB

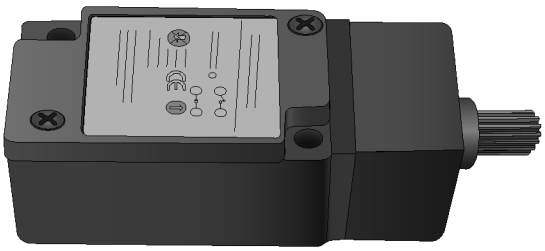

SWITCH - MICRO, CHA, LSB3K

0015959 MTM 1711349 CCB

RELAY - BAL LATCHING

0015475 MTM 5070476 CCB

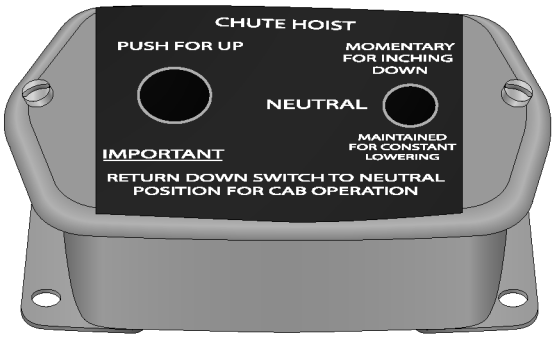

BOX - CHA, A-403DSC

0014105 MTM 5090192 CCB

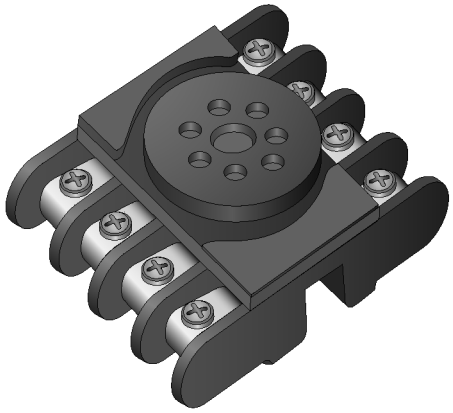

SOCKET - CHA BAL RELAY

0016956 MTM 1720144 CCB

KIMBLE

SWITCH - PROXY, 5 WIRE, BM & CHT

1329467 MTM E14-10001-00 KIMBLE

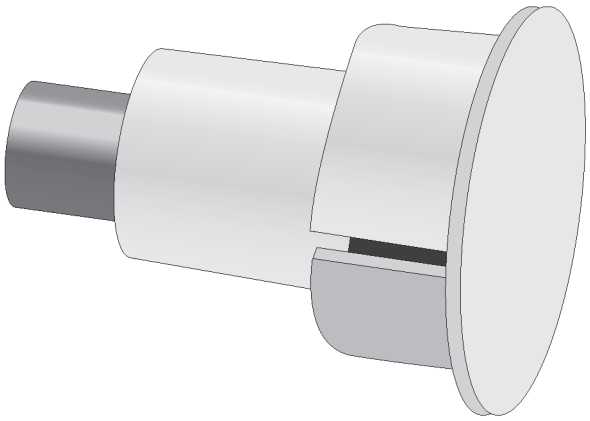

MAGNET - HPR UP

1333621 MTM E15-10001-02 KIMBLE

PENDANT - REAR

1334536 MTM E93-320411-0R KIMBLE

LONDON

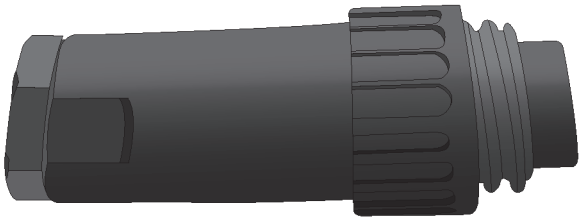

CONNECTOR - MALE, CONTROL CABLE

1255614 MTM MB-39109-01 LONDON

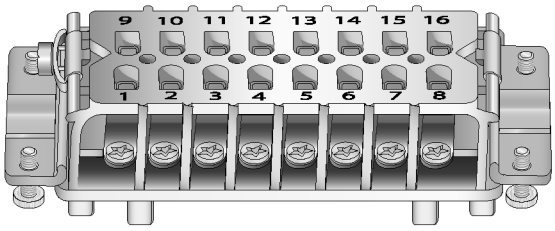

PLUG - FEMALE

1255496 MTM MA-39996 LONDON

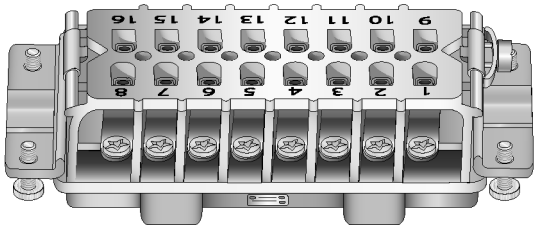

PLUG - MALE

1255497 MTM MA-39997 LONDON

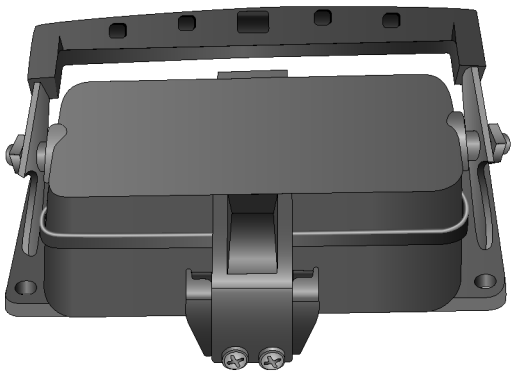

MOUNT - BASE, CONTROL HANDLE

1255498 MTM MA-39998 LONDON

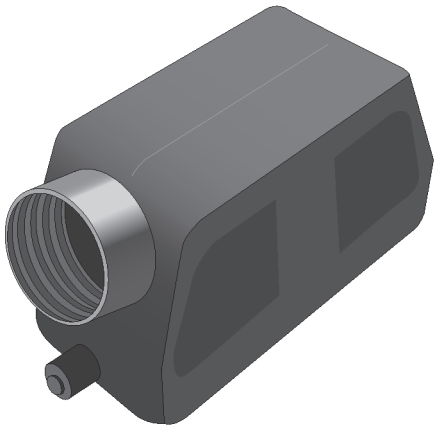

CONTROL HANDLE COVER - MOUNT

1255499 MTM MA-39999 LONDON

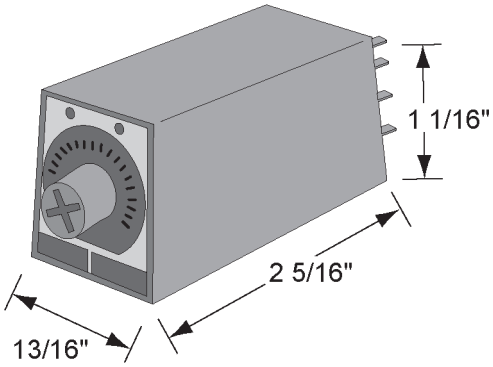

RELAY - TIME, CONTROL

1323019 MTM MA-38537 LONDON

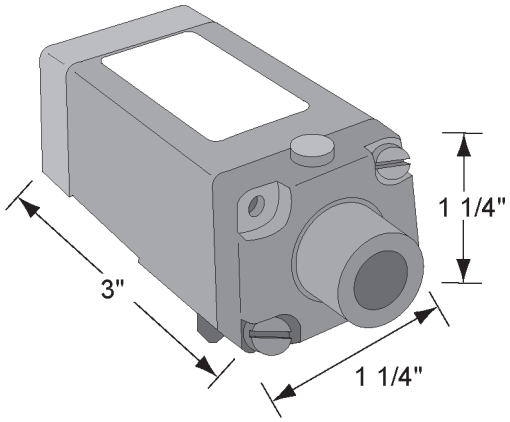

VALVE - ELECTRICAL, 3 WAY, N/O

1323540 MTM MA-39238 LONDON

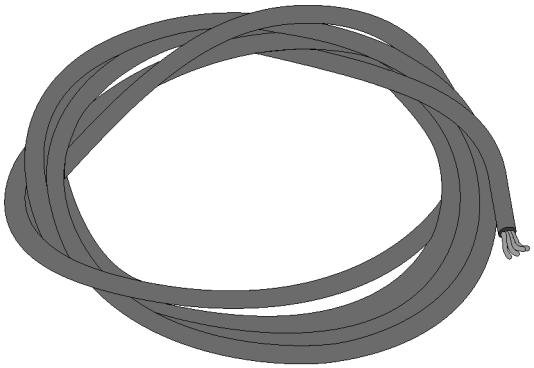

CABLE - ELECTRICAL

1255763 MTM HH-00835-003 LONDON

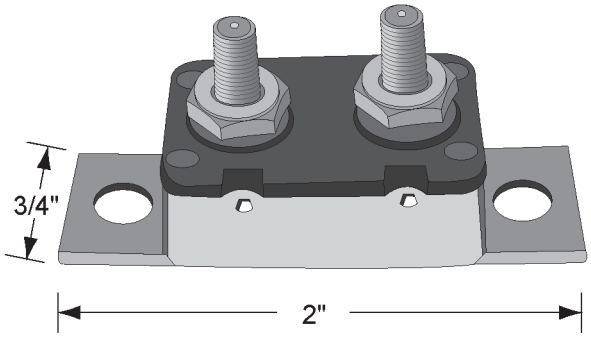

BREAKER - CIRCUIT, 10 AMP

1255844 MTM HH-01145-003 LONDON

LIGHT - ELECTRICAL, RED

1255876 MTM HH-01189-001 LONDON

HARNESS - ELECTRICAL, RR C/M

1430214 MTM MA-37890-01 LONDON

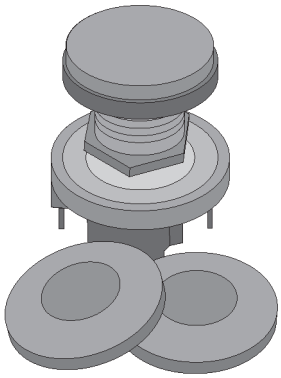

SWITCH - ELECTRICAL, PUSH/PULL

1255816 MTM HH-01070-000 LONDON

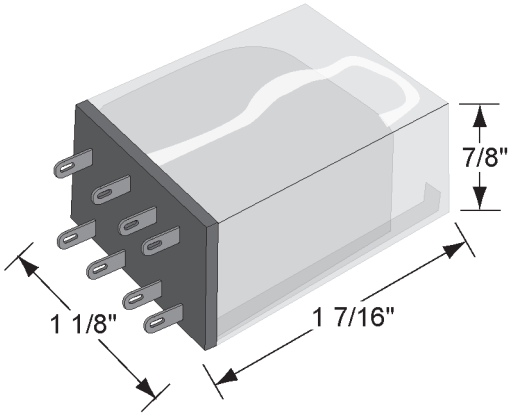

RELAY - POWER, CONTROL

1323017 MTM MA-37895 LONDON

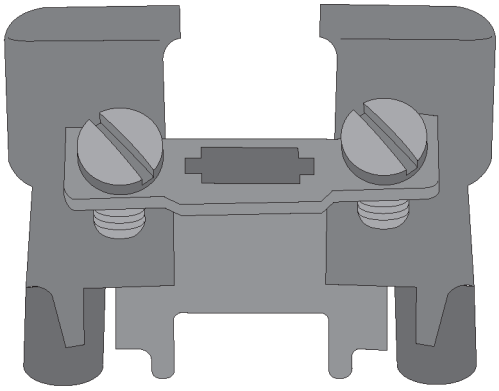

BLOCK - TERMINAL

1255863 MTM HH-01182-001 LONDON

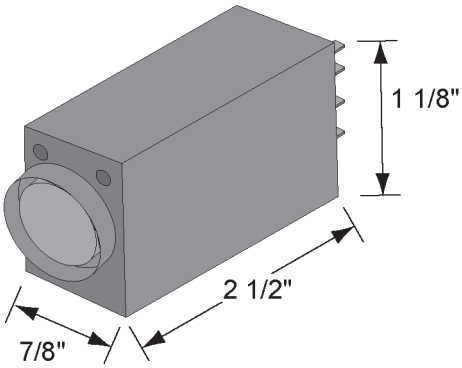

ELECTRIC TIME DELAY - SWITCH

1323018 MTM MA-37781 LONDON

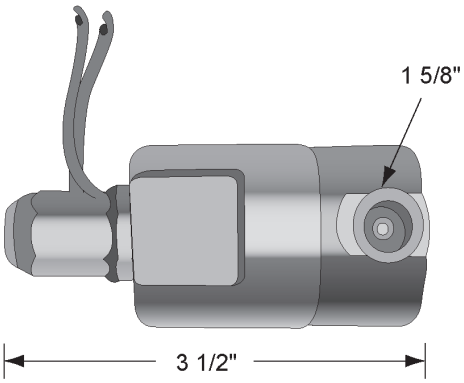

VALVE - AIR, HOPPER, N/C

1430235 MTM MA-38710 LONDON

No Image Available

MOTOR - HYDRAULIC, OIL COOLER, W/FAN

0108576 MTM LM-1022 LONDON

MTM

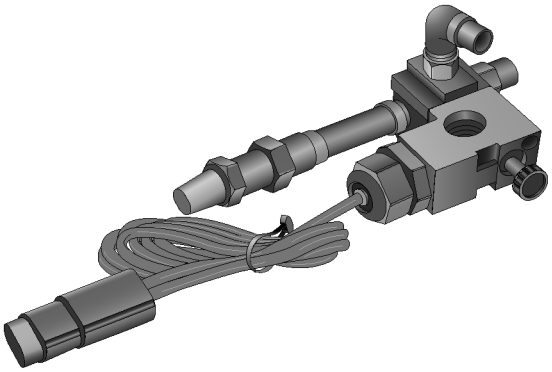

VALVE - MAC, CHUTE LOCK, W/O DEUTSCH

0085284 MTM

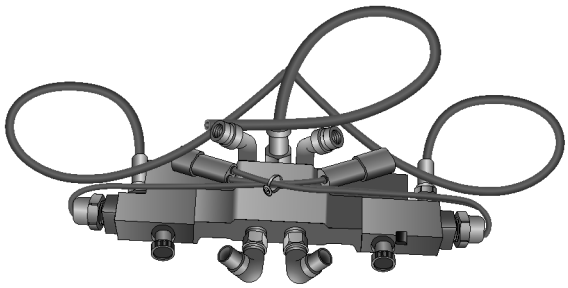

VALVE - MAC, PUSHER OVERRIDE

0082521 MTM

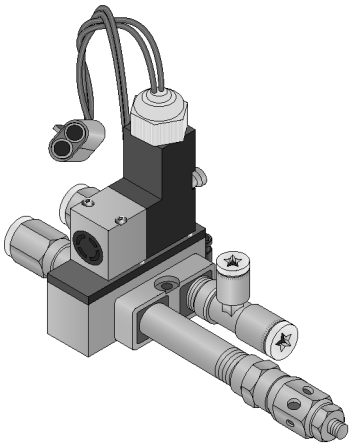

VALVE - SOLENOID, AIR HOPPER

0085288 MTM

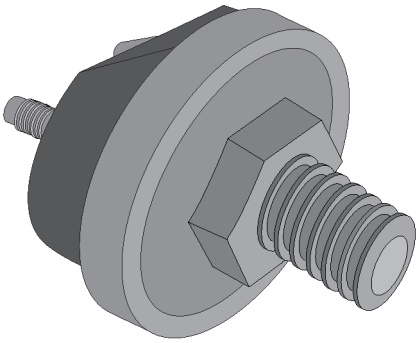

SWITCH - AIR MONITOR

0085283 MTM

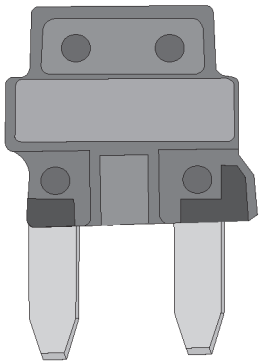

DIODE - BRIDGEMASTER V

0189244 MTM

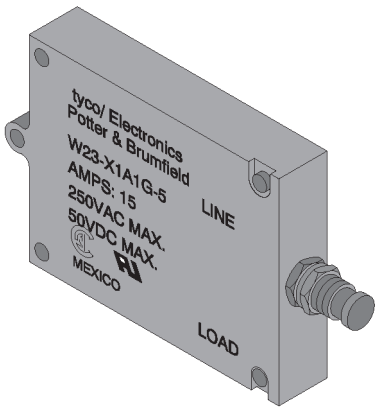

BREAKER - CIRCUIT, 15 AMP

0110123 MTM

BREAKER - CIRCUIT, 15 AMP

0110122 MTM

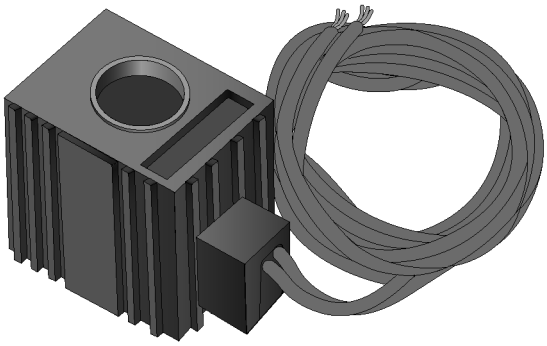

COIL - 12V, W/DIODE, 6" LEADS

0082986 MTM

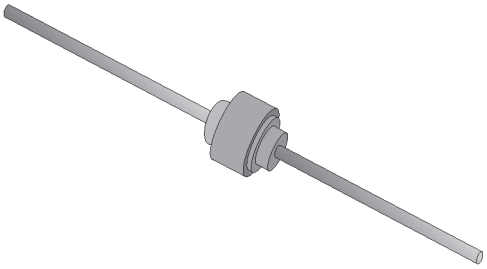

DIODE - CAB BOX, 08TMR2535L

1406668 MTM

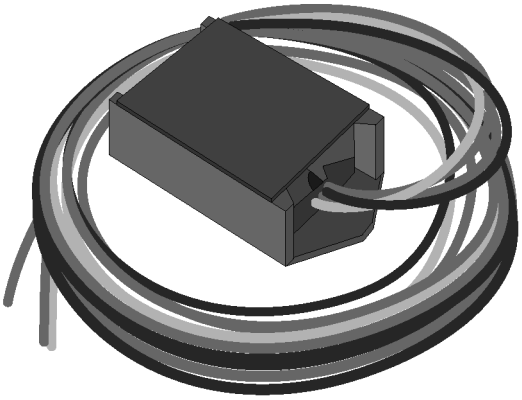

BOX - DETROIT ELEC ENG INT

0110208 MTM

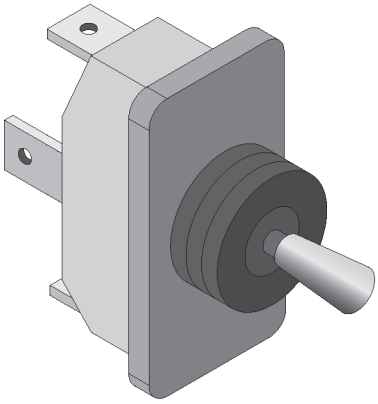

SWITCH - ON/OFF SCREWS HOLD WIRE ON

0110195 MTM

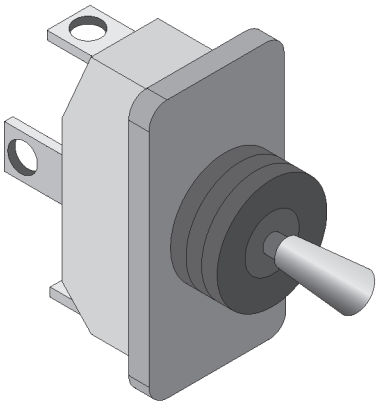

SWITCH - TOGGLE, ON/OFF SOLDER WIRE/ SWITCH

0016977 MTM

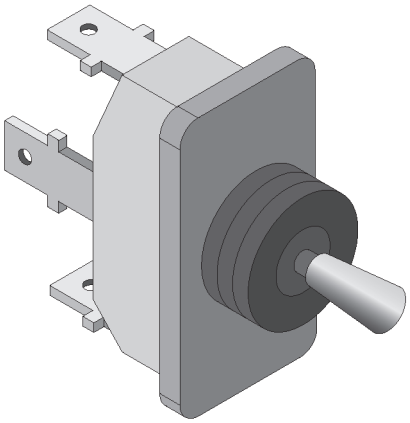

SWITCH - TOGGLE, ON/OFF, w/SPADES USED WITH 1101564 FLAG TERMINALS

0128730 MTM

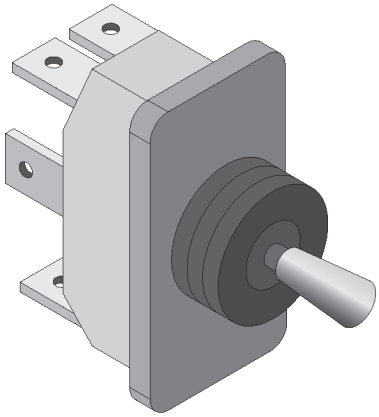

SWITCH - TOGGLE, 2NT1-1 3 WAY - ON - OFF - ON, 6 PRONG SCREWS HOLD WIRE ON

0082492 MTM

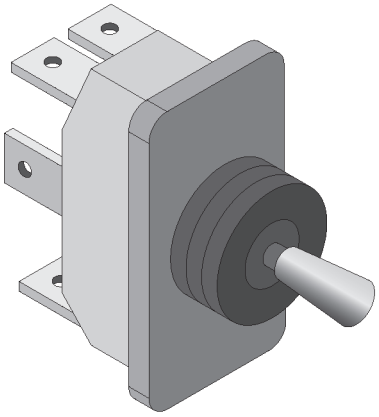

SWITCH - SELF CENTER, 2NT1-7, 6 PRONGS SCREWS HOLD WIRE ON

0082433 MTM

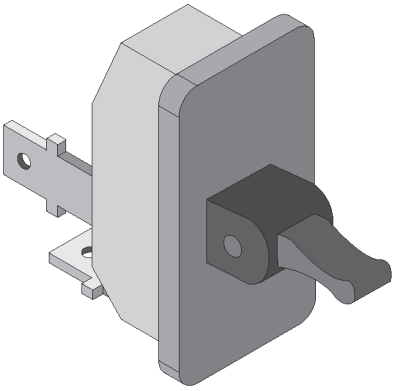

SWITCH - TOGGLE 4 PRONG

0110213 MTM

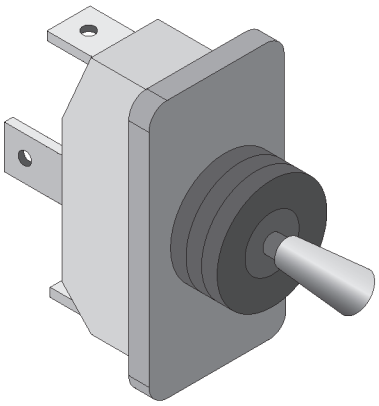

SWITCH - TOGGLE ON/OFF/ON, 3 WAY SCREWS HOLD WIRE ON

0110209 MTM

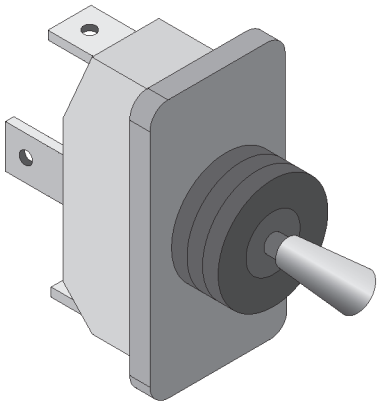

SWITCH - SELF CENTER 3 PRONG, SCREWS HOLD WIRE ON

0082446 MTM

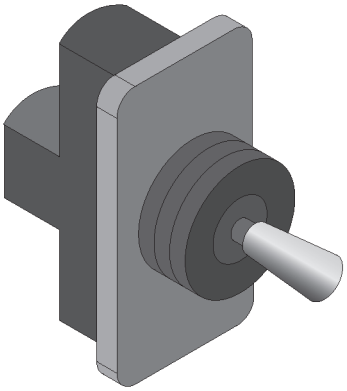

SWITCH - TOGGLE, C/L, CHA 1NT1-5 SELF CENTER ON ONE SIDE, ON/OFF ON THE OTHER

0016979 MTM

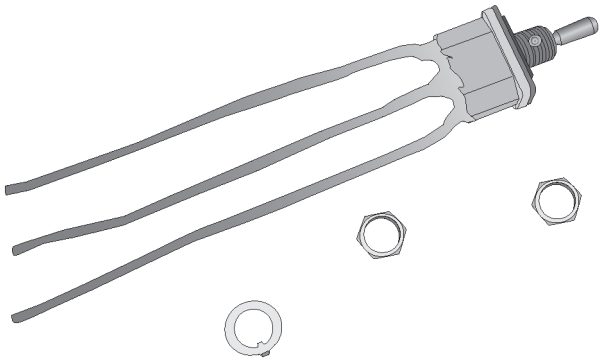

SWITCH - TOGGLE, ON/OFF, w/PIGTAIL OLD # 060.16977P - USED WITH BUTT CONNECTOR

1166275 MTM

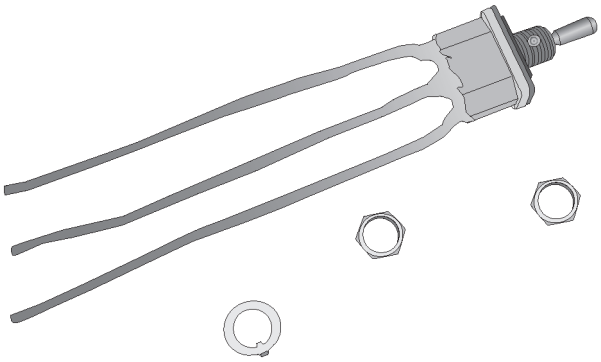

SWITCH - TOGGLE, w/PIGTAILS SELF CENTER - USED WITH BUTT CONNECTOR

0085693 MTM

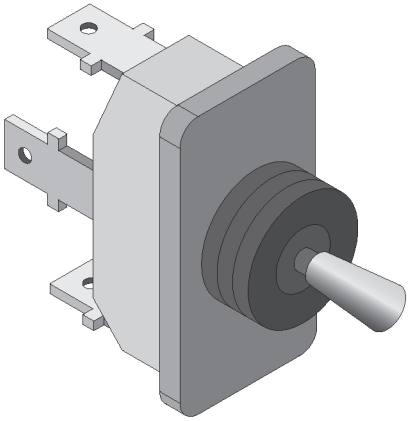

SWITCH - TOGGLE, SELF CENTER USED WITH 1101564 FLAG TERMINAL

0189136 MTM

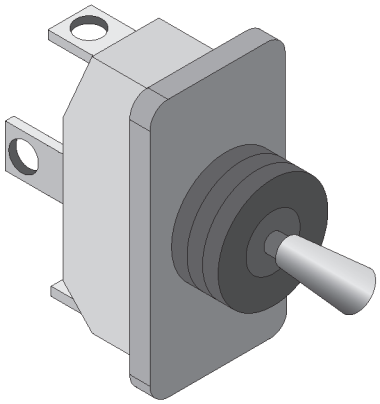

SWITCH - SPDT, w/o PIGTAIL SELF CENTER, SODER WIRE TO SWITCH

0082491 MTM

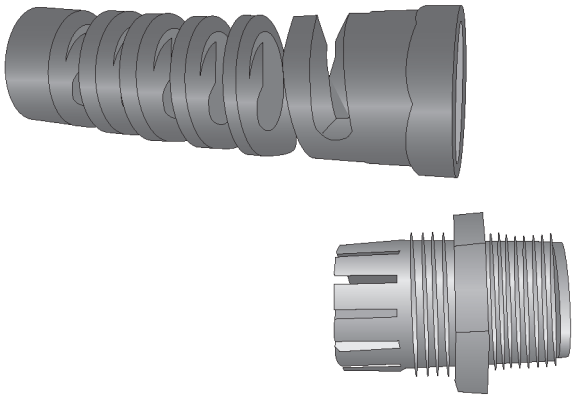

RELIEF - STRAIN, 3/4", W/FLEX TAIL

0110205 MTM

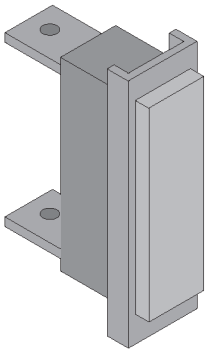

LIGHT - RED, RECTANGULAR

0110124 MTM

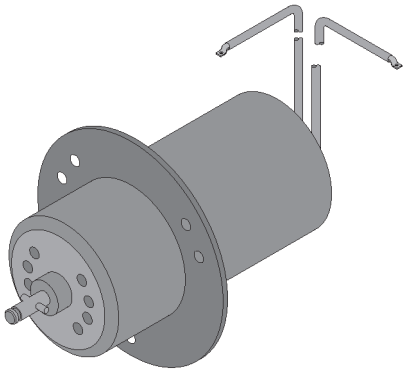

MOTOR - 12V, HAYDEN TEMPTROLLER

0106624 MTM

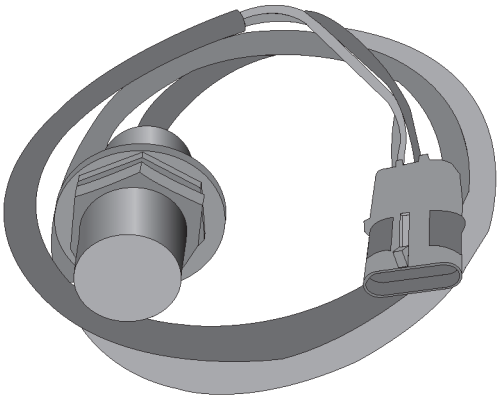

SWITCH - PROXY, 3-WIRE SINKING

0110172 MTM

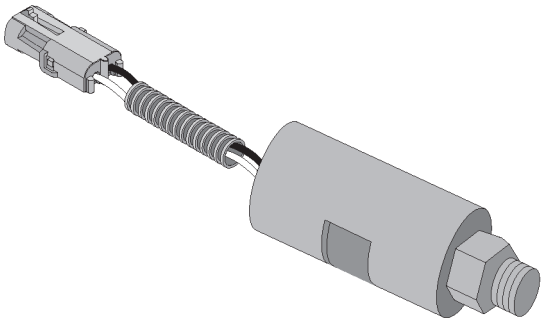

SWITCH - PRESSURE, CHUTE, NASON

0126137 MTM

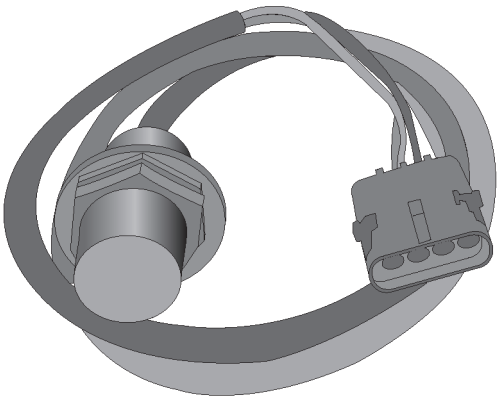

SWITCH - PROXY, W/WEATHER PAK CONN

1539595 MTM

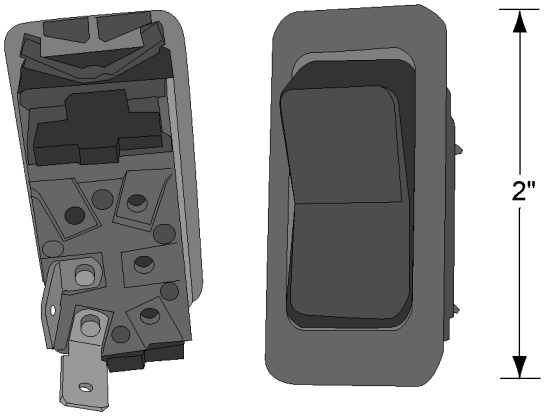

SWITCH - INTERLOCK, BM, LARGE

0110112 MTM

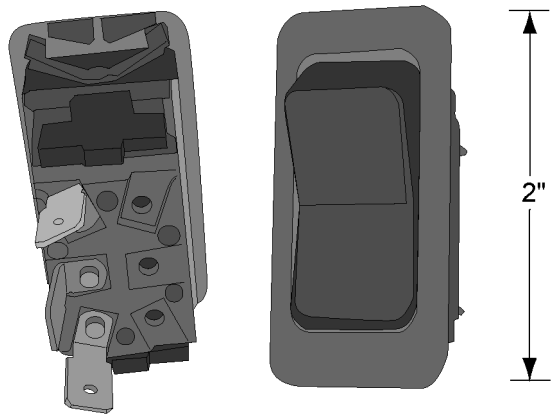

SWITCH - ROCKER, SELF-CENTER, BM UP/DWN

0110113 MTM

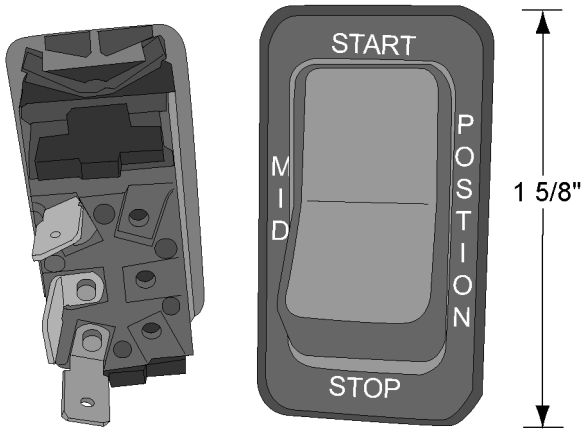

SWITCH - BM MID POSITION

0110251 MTM

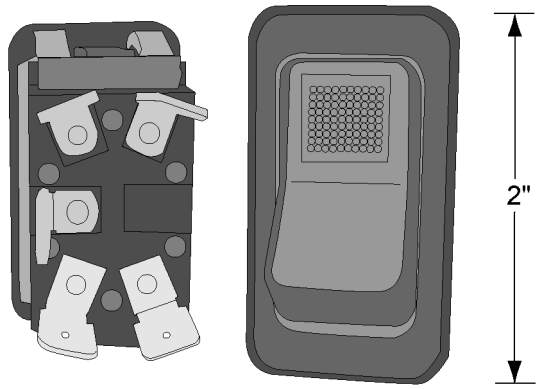

SWITCH - CHT LOCK, HOPPER, RED/RED

0110114 MTM

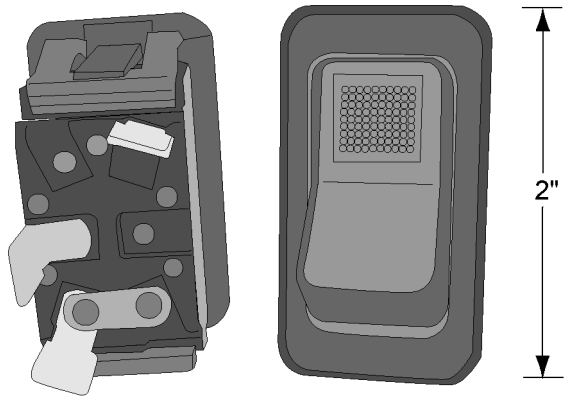

SWITCH - LIGHT, ON/OFF, GREEN, S/S, WORK LIGHT

0110115 MTM

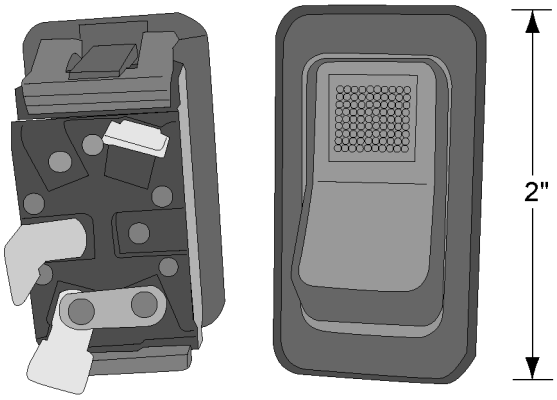

SWITCH - ROCKER, ON/OFF, RED, FAN

0110116 MTM

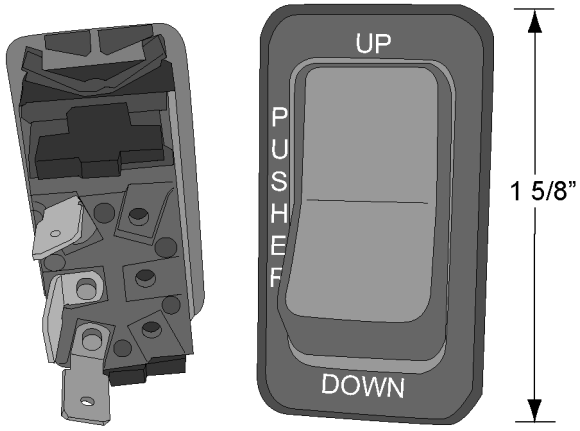

SWITCH - ROCKER, PUSHER

0110250 MTM

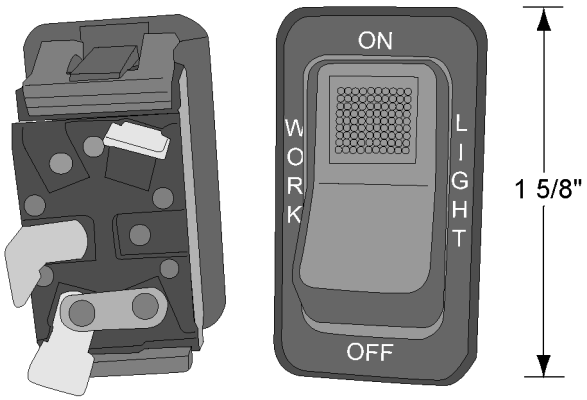

SWITCH - WORK LIGHT

0110254 MTM

SWITCH - BM ACTIVATE

0110259 MTM

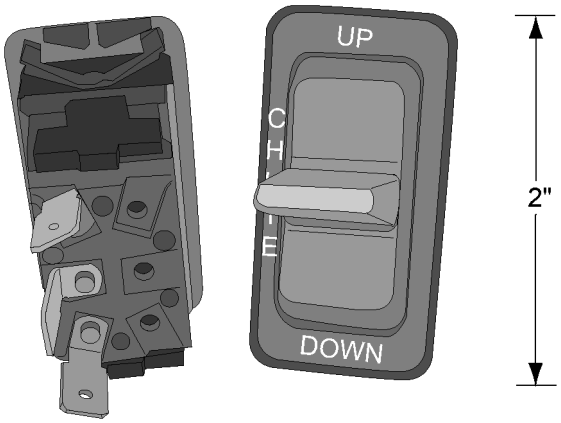

SWITCH - ROCKER, CHUTE UP/DWN

0110255 MTM

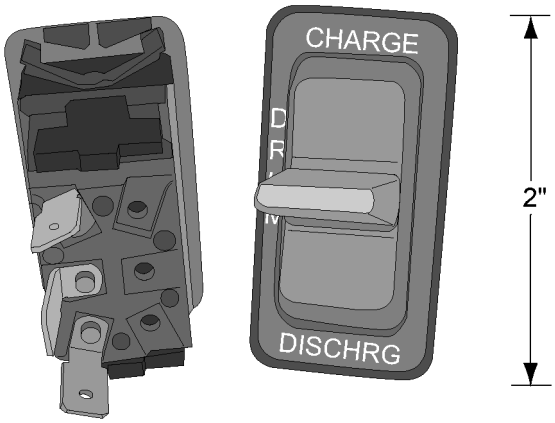

SWITCH - DR, CHARGE/DISCHARGE

0110256 MTM

SWITCH - HOPPER

0110257 MTM

SWITCH - CHUTE LOCK

0110258 MTM

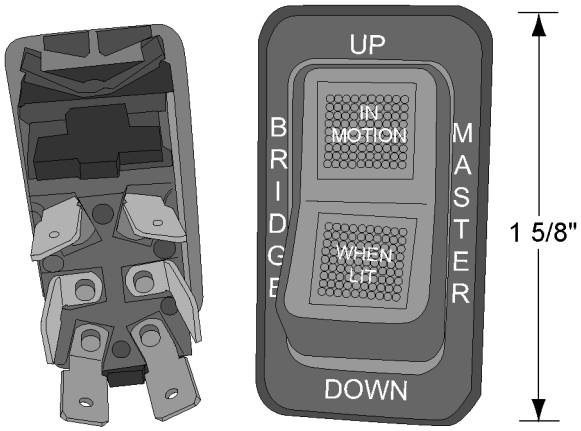

SWITCH - ROCKER, BM UP/DOWN

0110262 MTM

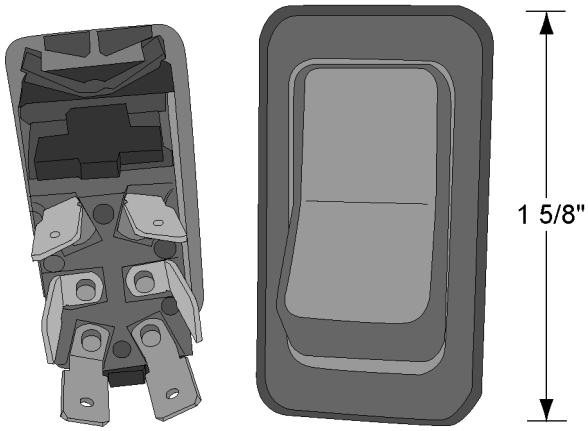

SWITCH - ON/OFF, DRUM S/S

1131892 MTM

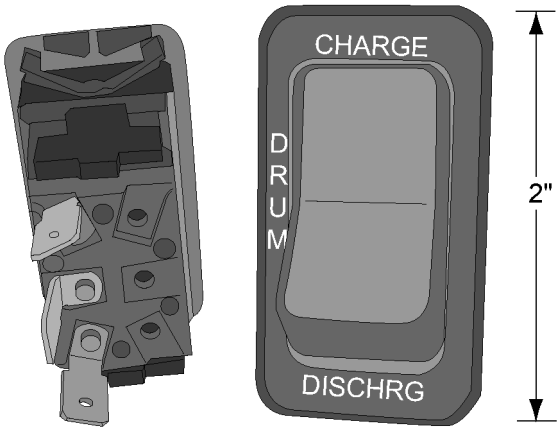

SWITCH - ROCKER, DRUM, CHG/DISCHG NON-PADDLE

0110264 MTM

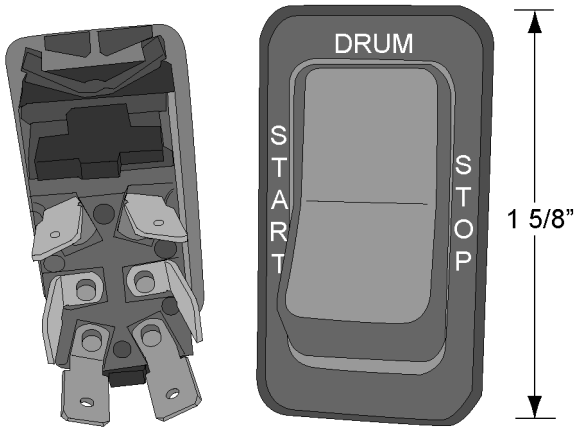

SWITCH - ROCKER, DRUM START/STOP

0110265 MTM

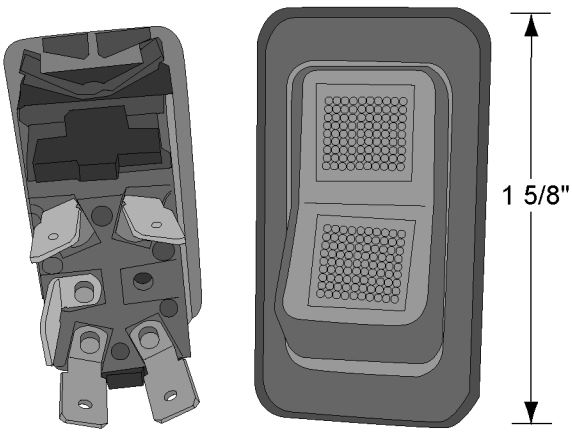

SWITCH - ROCKER, CHT LOCK/HOPPER

0189098 MTM

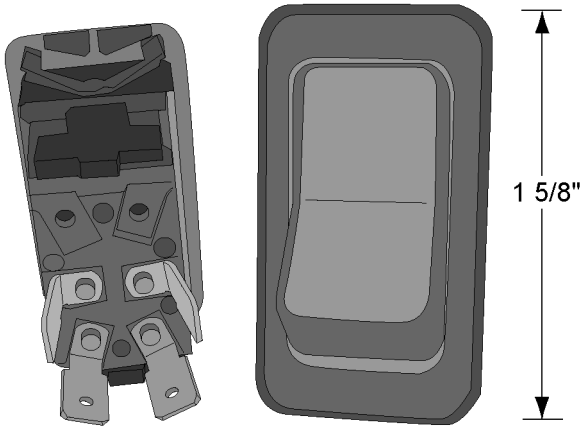

SWITCH - ROCKER, BM, DR START/STOP

0189099 MTM

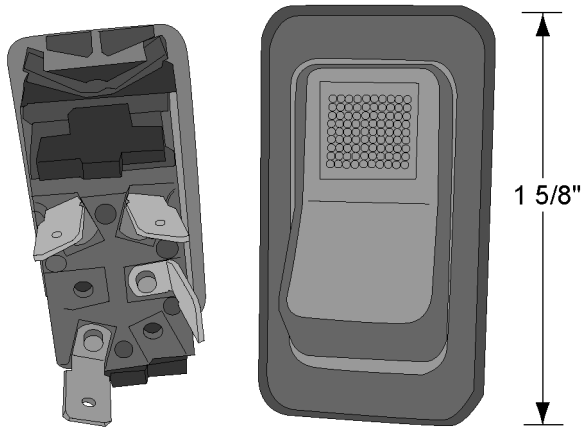

SWITCH - ON/OFF RED, BM ACTIVATE

1131893 MTM

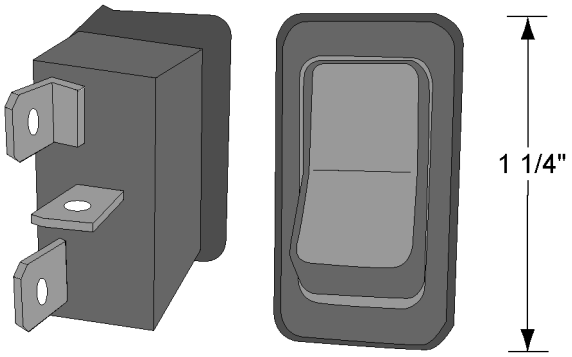

SWITCH - BM UP/DWN, ACTIVATE, SELF CENTER

1142686 MTM

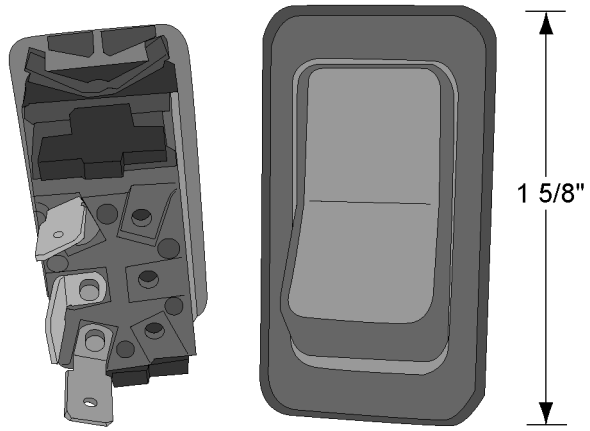

SWITCH - ON/OFF, CHUTE LOCK

0128042 MTM

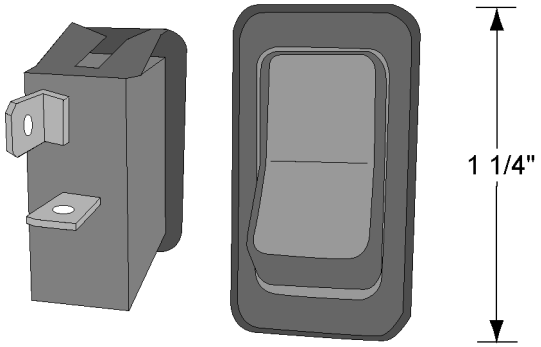

SWITCH - ON/OFF, WORK LIGHT

0189120 MTM

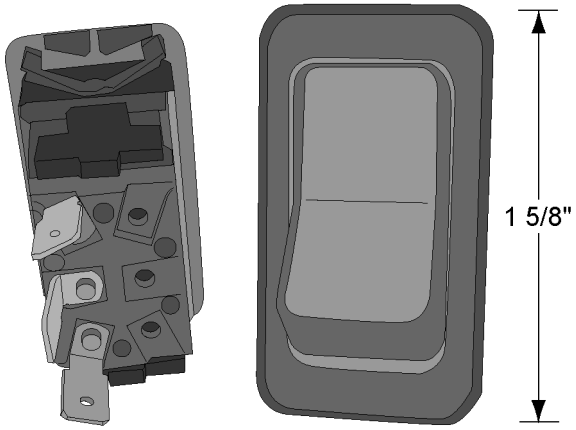

SWITCH - ROCKER, RED, DRUM

1145139 MTM

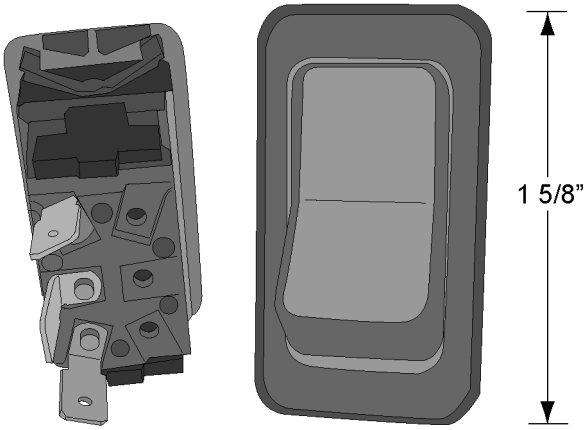

SWITCH - SELF CENTER, CHT UP/DOWN

0128011 MTM

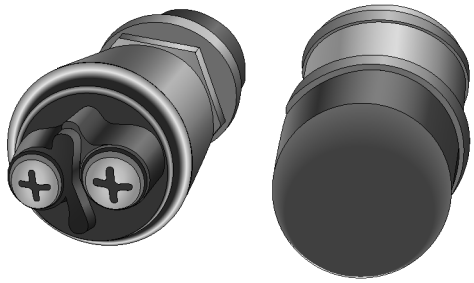

SWITCH - PUSH BUTTON, 2 TERM, MON

0110184 MTM

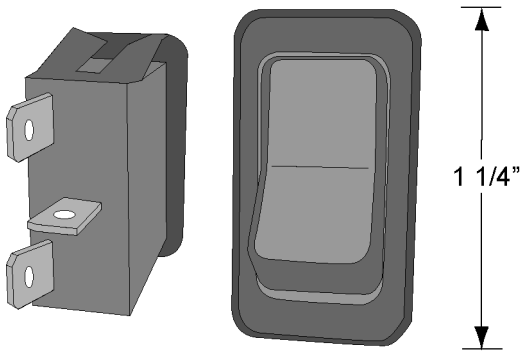

SWITCH - BM START/STOP

1103579 MTM

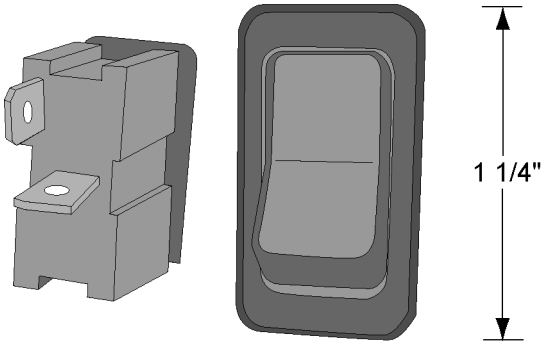

SWITCH - BM AXLE STOP

0189118 MTM

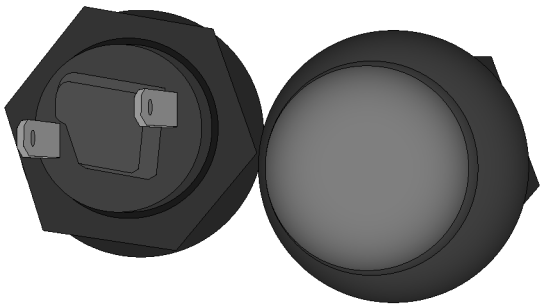

BUTTON - PUSH, YELLOW

0189123 MTM

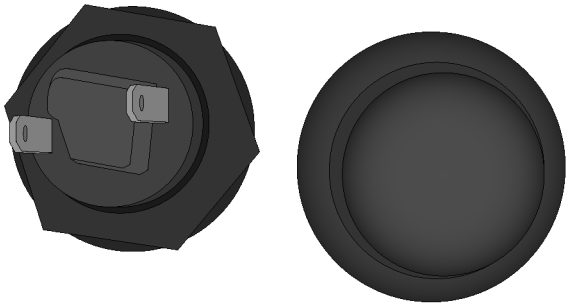

BUTTON - PUSH, RED

0189124 MTM

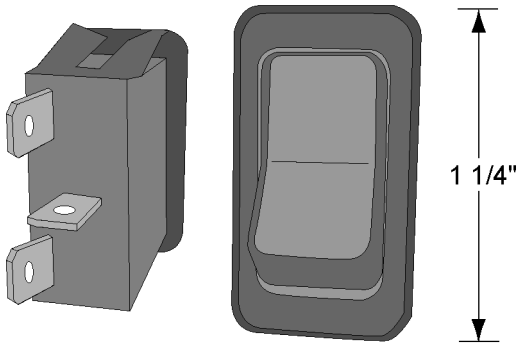

SWITCH - ROCKER HOPPER

1102875 MTM

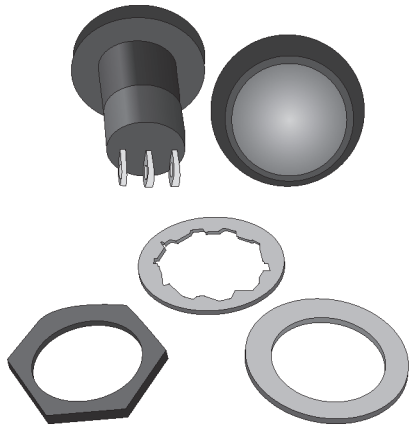

SWITCH - DRUM START/STOP

1103582 MTM

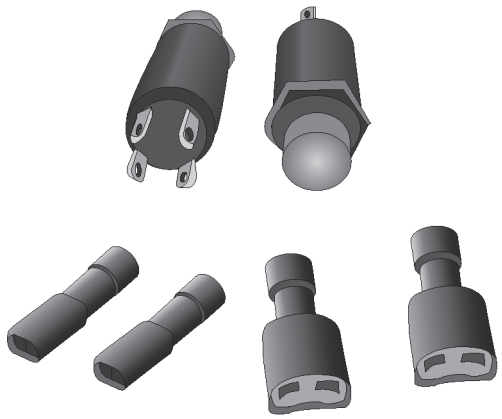

BUTTON - DISCHARGE, LED

1155959 MTM

LIGHT - MUTLI COLORED, 12V

0106646 MTM

LIGHT - MUTLI COLORED, 12V

0128409 MTM

LIGHT - CHUTE UNLOCK

0189119 MTM

LIGHT - LED, YELLOW INDICATOR

1145140 MTM

LIGHT - LED, RED INDICATOR

1145141 MTM

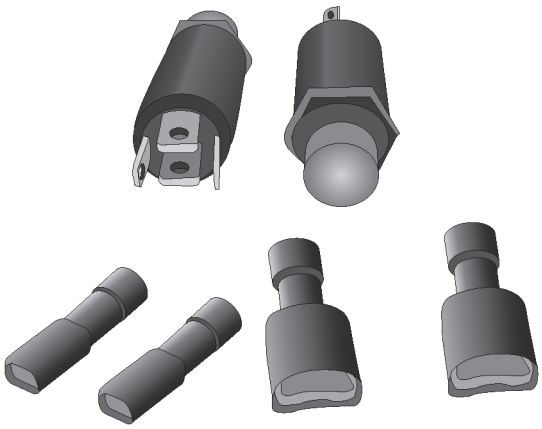

BUTTON - CONSTANT SPD, LED

1155960 MTM

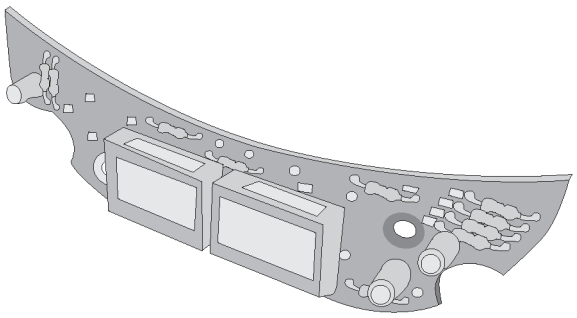

BOARD - PCB, COUNTER

1103584 MTM

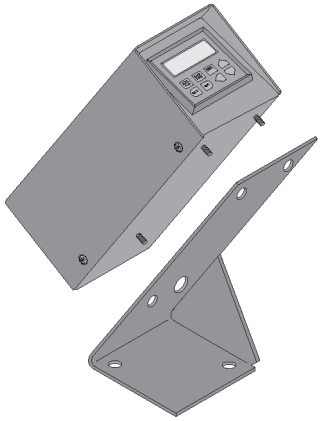

COUNTER - DRUM, DURANT

1102916 MTM

BRACKET - DUAL REV COUNTER

0500024 MTM

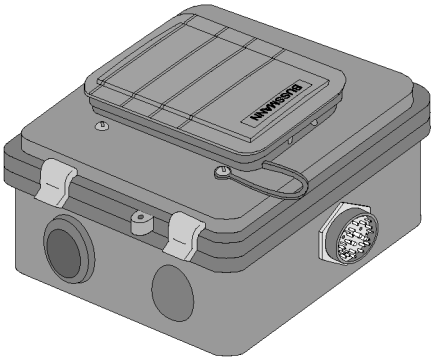

HARNESS - CAB, WITH FUSE BOX

0189504 MTM

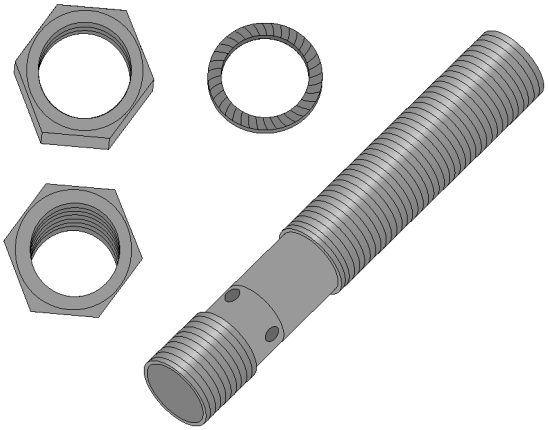

SW - PROX, DRUM COUNTER

1340549 MTM

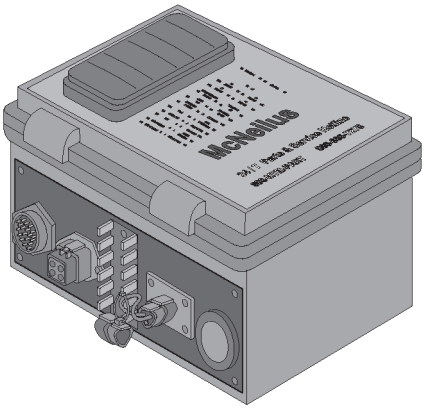

BOX - CONTROLS, CAB, EP

1133813 MTM

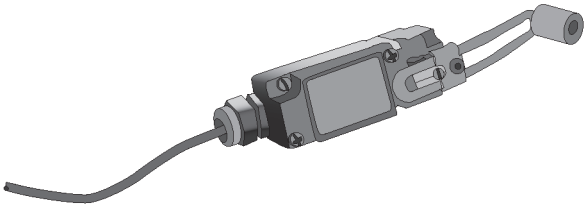

SWITCH - LIMIT, SGL POSITION, W/ARM

1165901 MTM

No Image Available

RELAY - 12V, W/DIODE, MCL BOX

1146544 MTM

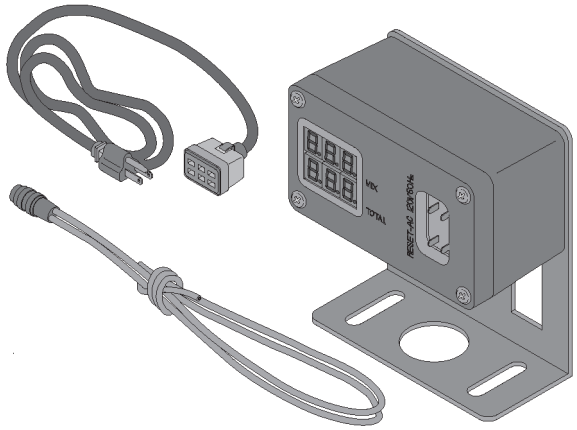

COUNTER - SYSDEYNE, W/RESET CORD

1111609 MTM

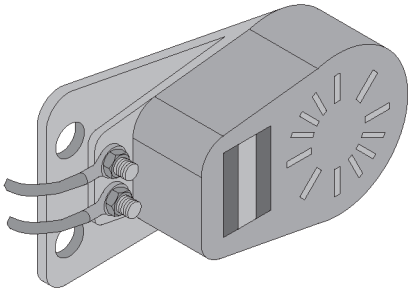

ALARM - BACK UP, 12-36V

0110082 MTM

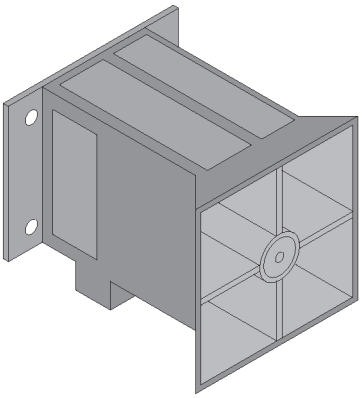

ALARM - BACK UP, PRECO 1059

0128725 MTM

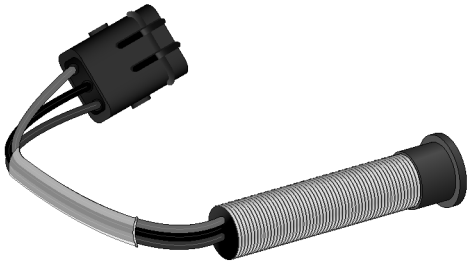

SENSOR - MOTOR SPEED, 3 WIRE

0002541 MTM

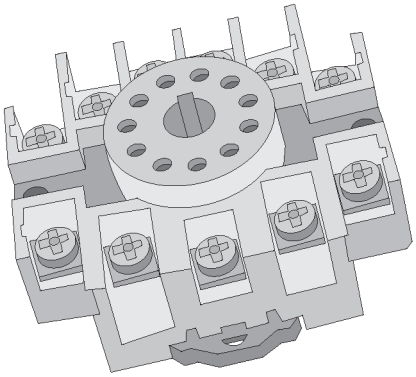

RELAY - SOCKET, 11 PIN

1275258 MTM

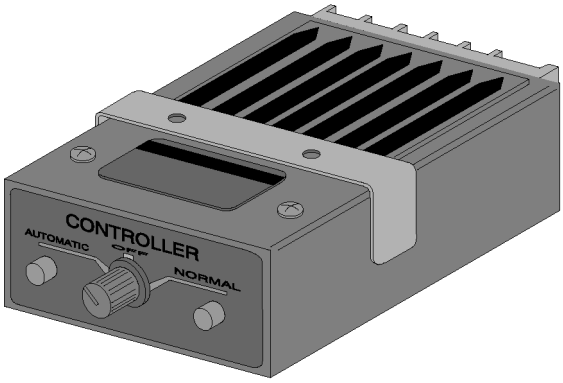

BOX - CAB, CONSTANT SPEED

0002509 MTM

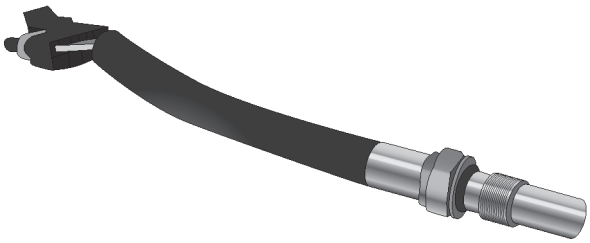

SENSOR - QUAD SPEED, 4 WIRE

1140769 MTM

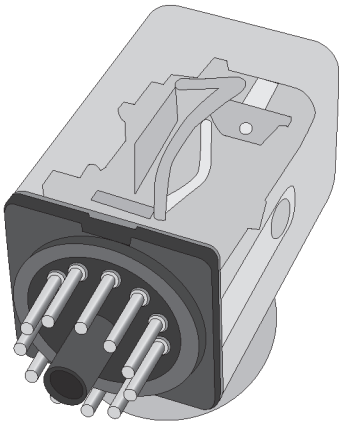

RELAY - LATCHING, 12VDC

1238612 MTM

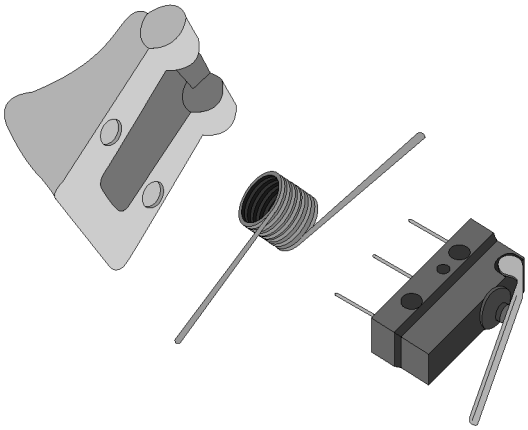

SPRING - TRIGGER, SWITCH KIT

1181101 MTM

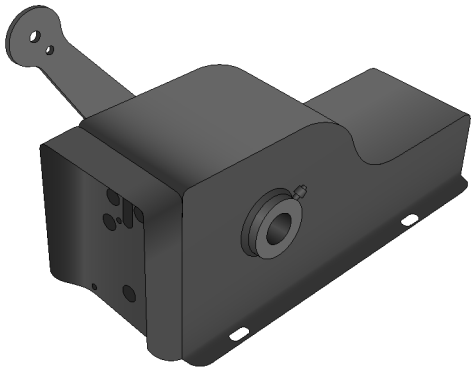

SINGLE HANDLE REAR CONTROL BOX

0153914 MTM

DUAL HANDLE REAR CONTROL BOX

0153880 MTM

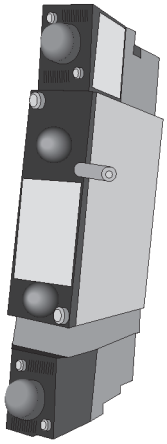

VALVE - CHUTE LOCK

1138152 MTM

VALVE - CHARGE HOPPER

1138153 MTM

VALVE - AUX AXLE

1138154 MTM

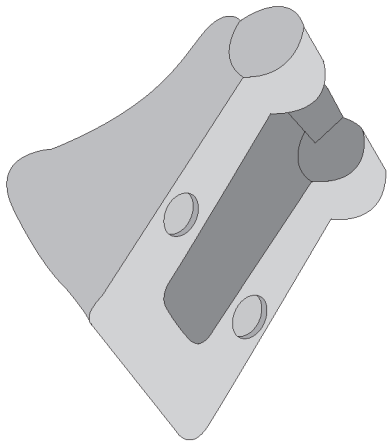

SWITCH - TRIGGER, RED

1103586 MTM

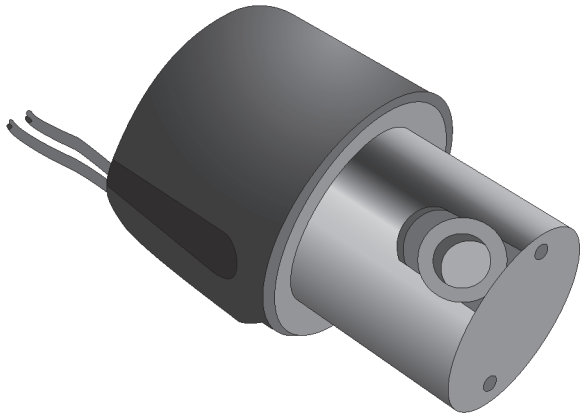

VALVE - SOLENOID, PETER PAUL

1166369 MTM

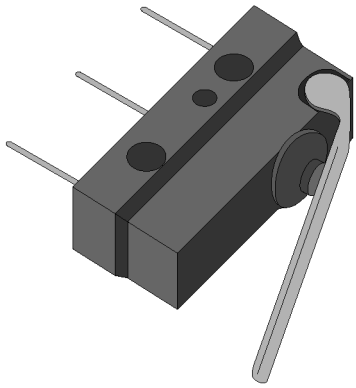

SWITCH - TRIGGER, MIXER, PENDANT

0189126 MTM

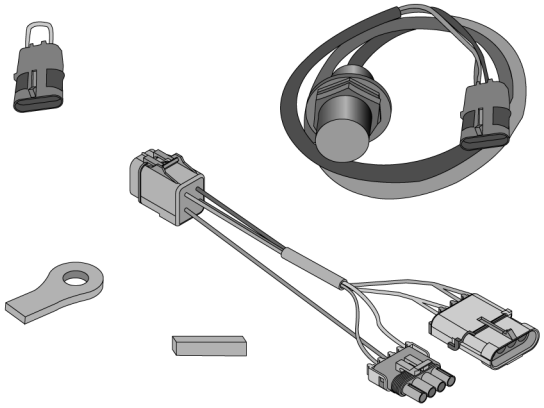

HARNESS - CHUTE CENTER PROX, KIT

1145717 MTM

SWITCH - PROX, SHORT

1572971 MTM

HARNESS - CHTE CENTER PROX,W/RLY

1145714 MTM

HARNESS - CHUTE PRESS SW JUMPER

1145715 MTM

TARGET - MAIN CHUTE PROX SWITCH

1132352 MTM

BRACKET - CHUTE CENTER

1144206 MTM

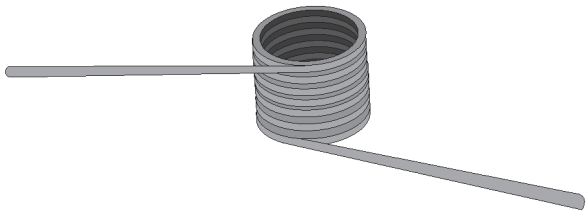

SPRING - TRIGGER

1103591 MTM

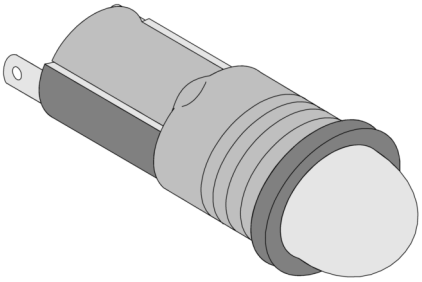

LIGHT - INDICATOR, RED

1262909 MTM

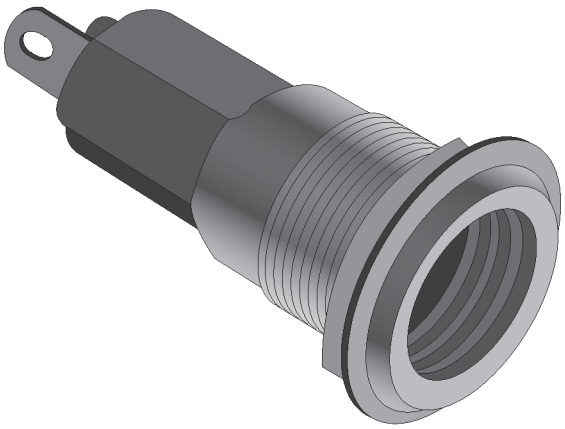

REX# LIGHT-75 WATT 125 V

1112884 MTM 298-12033-17 REX

REX

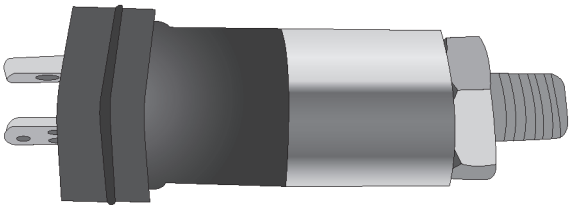

SWITCH - PRESSURE

1113004 MTM 113-20076-01 REX

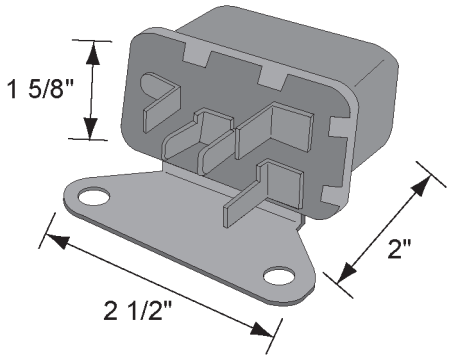

RELAY - POWER, DC

1112783 MTM 298-15062-17 REX

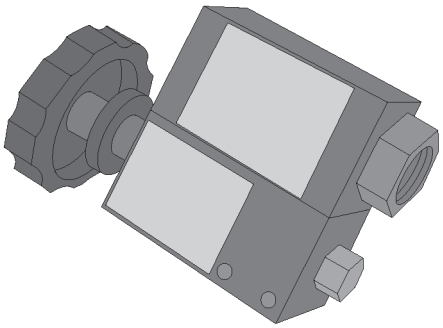

SWITCH - PRESSURE, BARKSDALE

1110685 MTM 102-13094-01 REX

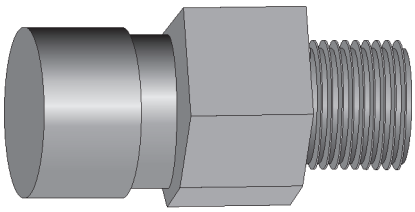

BREATHER - GEARBOX, REX

1146518 MTM 298-13005-86 REX

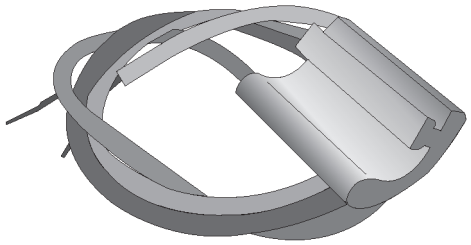

SWITCH - CYLINDER, AIR

1113289 MTM 298-06546-17 REX

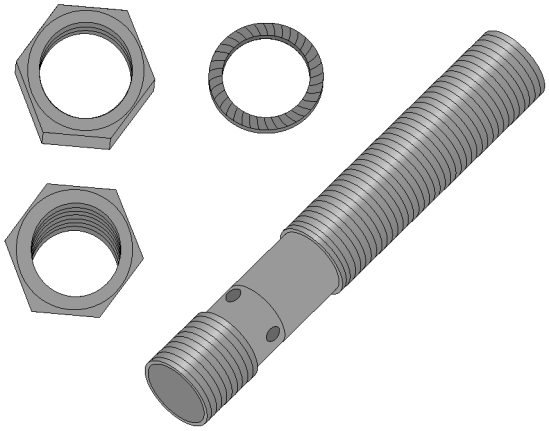

SW,PROX,DRUM COUNTER

1340549 MTM 30356909 SCHWING

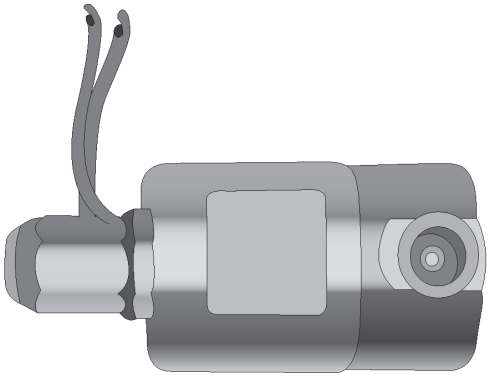

VALVE - SOLENOID, AIR/ELECTRIC, 100 PSI, N/O

1112627 MTM 298-02099-01 REX

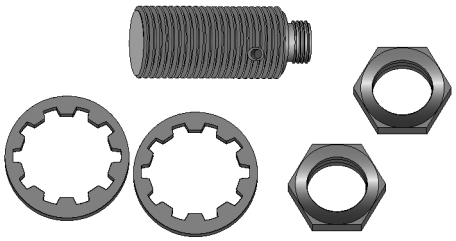

SENSOR - PROX,CHUTES

1358550 MTM 30342633 SCHWING

SCHWING

PENDANT

1329189 MTM 30361593 SCHWING

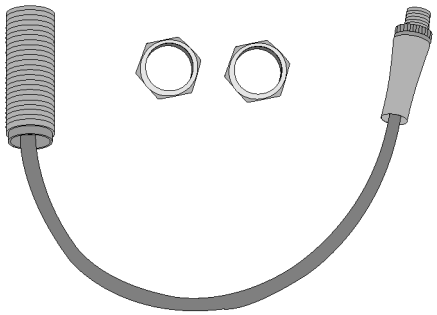

VALVE - AIR, SOLENOID, 12V DC

1358552 MTM 30350926 SCHWING

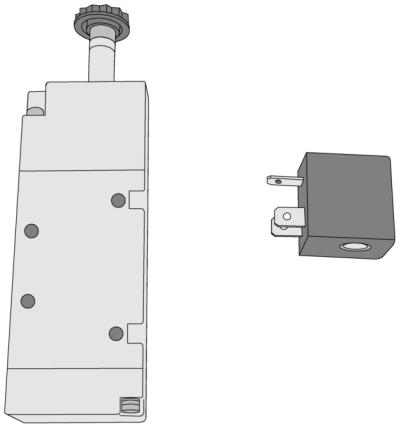

COIL - SOLENOID, CHUTE LOCK

1359311 MTM 30389153 SCHWING

VALVE - SOLENOID, CHUTE LOCK

1359309 MTM 30389153 SCHWING

SMITH

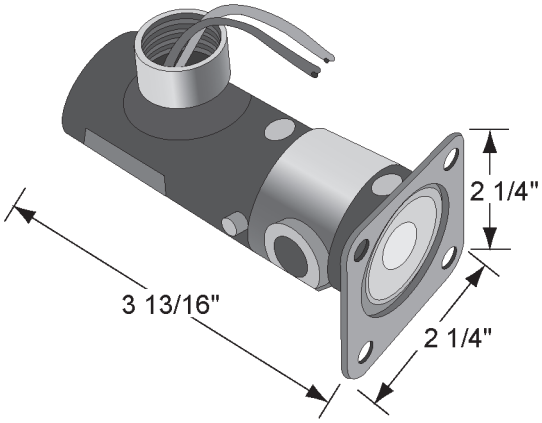

VALVE - AIR, SOLENOID, 12V DC

1111261 MTM 3366000 SMITH

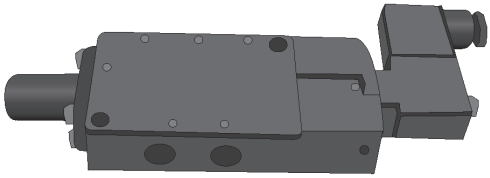

VALVE - LIFT, HOPPER

1111433 MTM 43619140 SMITH

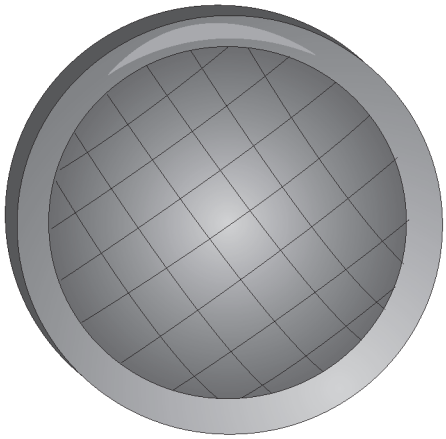

LIGHT - PANEL, CONTROL

1111197 MTM 3257006 SMITH

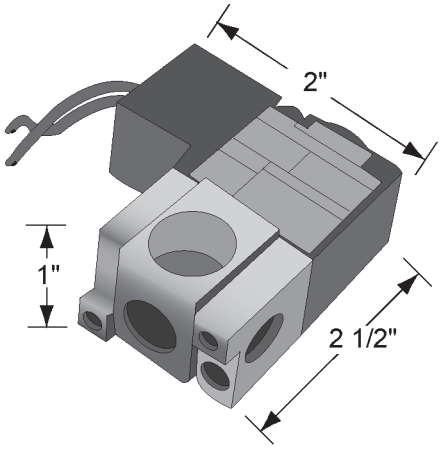

VALVE - THROTTLE ADV, N/C

0620007 MTM 43682000 SMITH

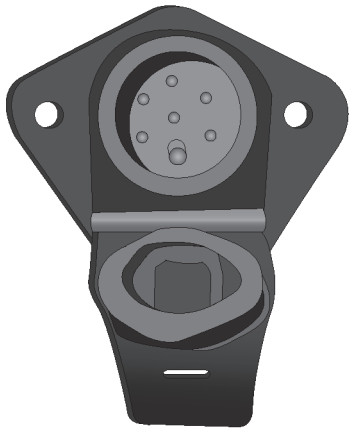

PLUG - FEMALE, CONTROL

1110442 MTM 00944004 SMITH

LIGHT - PANEL, CONTROL, RECTANGULAR

1111826 MTM 550000507 SMITH

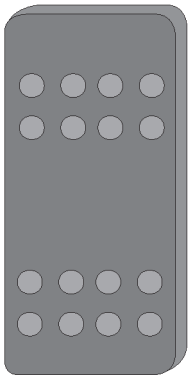

SWITCH - LED. RED

1110764 MTM 1200012 SMITH

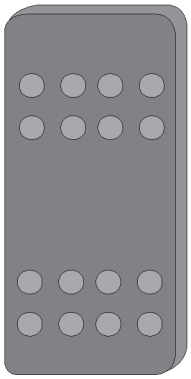

SWITCH - ELECTRIC, ON/OFF

1110767 MTM 1200015 SMITH

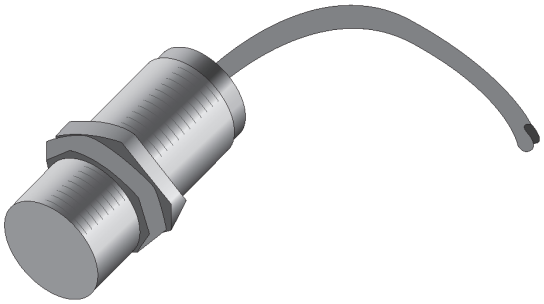

SWITCH - PROX, 3 WIRE, N/O

1114395 MTM 3589004 SMITH

SWITCH - PROX, 12MM

1111342 MTM 3589001 SMITH

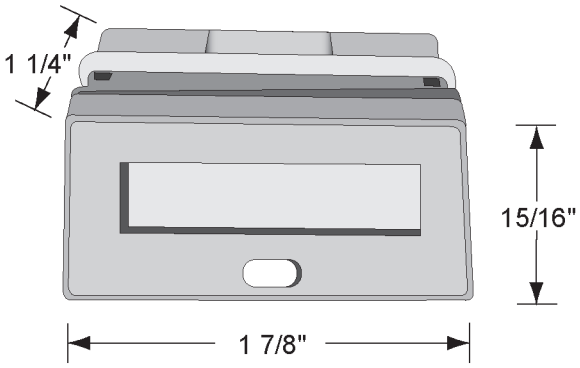

COUNTER - ELECTRIC

1227885 MTM C342-0464 SMITH

CONTROL CABLES - 3” THROW

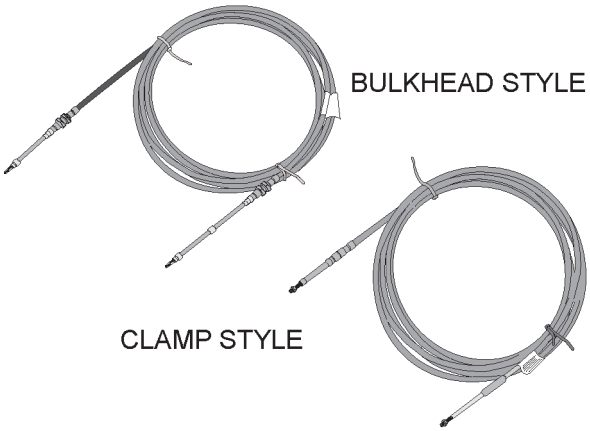

CABLE - CONTROL, 1/4” - 5’ 3” THROW
0000805 MTM

CABLE - CONTROL, 1/4” - 6’ 3” THROW
0000806 MTM

CABLE - CONTROL, 1/4” - 7 3” THROW’
0000807 MTM

CABLE - CONTROL, 1/4” - 8’ 3” THROW
0000808 MTM

CABLE - CONTROL, 1/4” - 9’ 3” THROW
0000809 MTM

CABLE - CONTROL, 1/4” - 10’ 3” THROW
0000810 MTM

CABLE - CONTROL, 1/4” - 11’ 3” THROW
0000811 MTM

CABLE - CONTROL, 1/4” - 12’ 3” THROW
0000812 MTM

CABLE - CONTROL, 1/4” - 13’ 3” THROW
0000813 MTM

CABLE - CONTROL, 1/4” - 14’ 3” THROW
0000814 MTM

CABLE - CONTROL, 1/4” - 15’ 3” THROW
0000815 MTM

CABLE - CONTROL, 1/4” - 16’ 3” THROW
0000816 MTM

CABLE - CONTROL, 1/4” - 17’ 3” THROW
0000817 MTM

CABLE - CONTROL, 1/4” - 18’ 3” THROW
0000818 MTM

CABLE - CONTROL, 1/4” - 19’ 3” THROW
0000819 MTM

CABLE - CONTROL, 1/4” - 20’ 3” THROW
0000820 MTM

CABLE - CONTROL, 1/4” - 21’ 3” THROW
0000821 MTM

CABLE - CONTROL, 1/4” - 22’ 3” THROW
0000822 MTM

CABLE - CONTROL, 1/4” - 23’ 3” THROW
0000823 MTM

CABLE - CONTROL, 1/4” - 24’ 3” THROW
0000824 MTM

CABLE - CONTROL, 1/4” - 25’ 3” THROW
0000825 MTM

CABLE - CONTROL, 1/4” - 26’ 3” THROW
0000826 MTM

CABLE - CONTROL, 1/4” - 27’ 3” THROW
0000827 MTM

CABLE - CONTROL, 1/4” - 28’ 3” THROW
0000828 MTM

CABLE - CONTROL, 1/4” - 29’ 3” THROW
0000829 MTM

CABLE - CONTROL, 5/16” - 5’ 3” THROW
0000835 MTM

CABLE - CONTROL, 5/16” - 6’ 3” THROW
0000836 MTM

CABLE - CONTROL, 5/16” - 7’ 3” THROW
0000837 MTM

CABLE - CONTROL, 5/16” - 8’ 3” THROW
0000838 MTM

CABLE - CONTROL, 5/16” - 9’ 3” THROW
0000839 MTM

CABLE - CONTROL, 5/16” - 10’ 3” THROW
0000840 MTM

CABLE - CONTROL, 5/16” - 11’ 3” THROW
0000841 MTM

CABLE - CONTROL, 5/16” - 12’ 3” THROW
0000842 MTM

CABLE - CONTROL, 5/16” - 13’ 3” THROW
0000843 MTM

CABLE - CONTROL, 5/16” - 14’ 3” THROW
0000844 MTM

CABLE - CONTROL, 5/16” - 15’ 3” THROW
0000845 MTM

CABLE - CONTROL, 5/16” - 16’ 3” THROW
0000846 MTM

CABLE - CONTROL, 5/16” - 17’ 3” THROW
0000847 MTM

CABLE - CONTROL, 5/16” - 18’ 3” THROW
0000848 MTM

CABLE - CONTROL, 5/16” - 19’ 3” THROW
0000849 MTM

CABLE - CONTROL, 5/16” - 20’ 3” THROW
0000850 MTM

CABLE - CONTROL, 5/16” - 21’ 3” THROW
0000851 MTM

CABLE - CONTROL, 5/16” - 22’ 3” THROW
0000852 MTM

CABLE - CONTROL, 5/16” - 23’ 3” THROW
0000853 MTM

CABLE - CONTROL, 5/16” - 24’ 3” THROW
0000854 MTM

CABLE - CONTROL, 5/16” - 25’ 3” THROW
0000855 MTM

CABLE - CONTROL, 5/16” - 26’ 3” THROW
0000856 MTM

CABLE - CONTROL, 5/16” - 27’ 3” THROW
0000857 MTM

CABLE - CONTROL, 5/16” - 28’ 3” THROW
0000858 MTM

CABLE - CONTROL, 5/16” - 29’ 3” THROW
0000859 MTM

CONTROL CABLES - 4” THROW

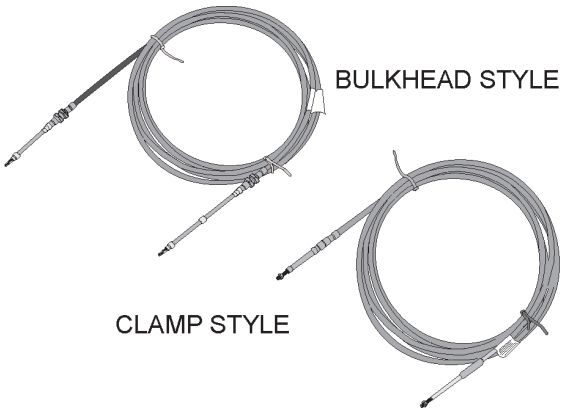

CABLE - CONTROL, 1/4” - 4’ 4” THROW
0115802 MTM

CABLE - CONTROL, 1/4” - 5’ 4” THROW
0215805 MTM

CABLE - CONTROL, 1/4” - 6’ 4” THROW
0215806 MTM

CABLE - CONTROL, 1/4” - 7’ 4” THROW
0215807 MTM

CABLE - CONTROL, 1/4” - 8’ 4” THROW
0215808 MTM

CABLE - CONTROL, 1/4” - 9’ 4” THROW
0215809 MTM

CABLE - CONTROL, 1/4” - 10’ 4” THROW
0215810 MTM

CABLE - CONTROL, 1/4” - 11’ 4” THROW
0215811 MTM

CABLE - CONTROL, 1/4” - 12’ 4” THROW
0215812 MTM

CABLE - CONTROL, 1/4” - 13’ 4” THROW
0215813 MTM

CABLE - CONTROL, 1/4” - 14’ 4” THROW
0215814 MTM

CABLE - CONTROL, 1/4" - 15' 4" THROW
0215815 MTM

CABLE - CONTROL, 1/4" - 16' 4" THROW
0215816 MTM

CABLE - CONTROL, 1/4" - 17' 4" THROW
0215817 MTM

CABLE - CONTROL, 1/4" - 18' 4" THROW
0215818 MTM

CABLE - CONTROL, 1/4" - 19' 4" THROW
0215819 MTM

CABLE - CONTROL, 1/4" - 20' 4" THROW
0215820 MTM

CABLE - CONTROL, 1/4" - 21' 4" THROW
0215821 MTM

CABLE - CONTROL, 1/4" - 22' 4" THROW
0215822 MTM

CABLE - CONTROL, 1/4" - 21' 4" THROW
0215821 MTM

CABLE - CONTROL, 1/4" - 23' 4" THROW
0215823 MTM

CABLE - CONTROL, 1/4" - 24' 4" THROW
0215824 MTM

CABLE - CONTROL, 1/4" - 25' 4" THROW
0215825 MTM

CABLE - CONTROL, 1/4" - 26' 4" THROW
0215826 MTM

CABLE - CONTROL, 1/4" - 27' 4" THROW
0215827 MTM

CABLE - CONTROL, 1/4" - 28' 4" THROW
0215828 MTM

CABLE - CONTROL, 1/4" - 29' 4" THROW
0215829 MTM

CABLE - CONTROL, 5/16" - 13' 4" THROW
0016213 MTM

CABLE - CONTROL, 5/16" - 15' 4" THROW
0016569 MTM

CABLE - CONTROL, 5/16" - 16' 4" THROW
0016563 MTM

CABLE - CONTROL, 5/16" - 17' 4" THROW
0016555 MTM

CABLE - CONTROL, 5/16" - 18' 4" THROW
0016556 MTM

CABLE - CONTROL, 5/16" - 19' 4" THROW
0016557 MTM

CABLE - CONTROL, 5/16" - 20' 4" THROW
0016558 MTM

CABLE - CONTROL, 5/16" - 21' 4" THROW
0016559 MTM

CABLE - CONTROL, 5/16" - 22' 4" THROW
0016560 MTM

CABLE - CONTROL, 5/16" - 23' 4" THROW
0016587 MTM

CABLE - CONTROL, 5/16" - 24' 4" THROW
0016561 MTM

CABLE - CONTROL, 5/16" - 25' 4" THROW
0016562 MTM

CABLE - CONTROL, 5/16" - 26' 4" THROW
0016568 MTM

CABLE - CONTROL, 5/16" - 27' 4" THROW
0016567 MTM

CABLE - CONTROL, 5/16" - 28' 4" THROW
0016564 MTM

CABLE - CONTROL, 5/16" - 29' 4" THROW
0016565 MTM

CABLE - CONTROL, 5/16" - 30' 4" THROW
0016566 MTM

THROTTLE CABLES

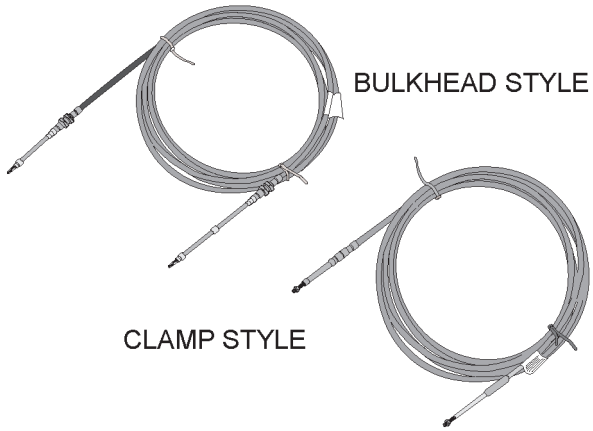

CABLE - THROTTLE, 1/4" - 30', 4" THROW
0215830 MTM

CABLE - THROTTLE, 1/4" - 33', 4" THROW
0215833 MTM

CABLE - THROTTLE, 1/4" - 22', 4" THROW
0016580 MTM

CABLE - THROTTLE, 1/4" - 25', 4" THROW
0016581 MTM

CABLE - THROTTLE, 1/4" - 28', 4" THROW
0016582 MTM

CABLE - THROTTLE, 1/4" - 30', 4" THROW
0016583 MTM

CABLE - THROTTLE, 1/4" - 30', 3" THROW
0000830 MTM

CABLE - THROTTLE, 1/4" - 30', 4" THROW, REX
0067065 MTM

CONTROL CABLE ACCESSORIES

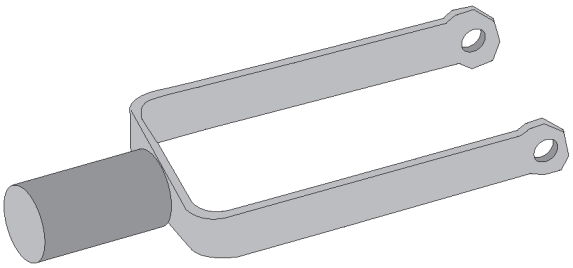

CLEVIS - CABLE, 1/4"
0000800 MTM

PIN - CABLE, CLEVIS 1/4"
0000801 MTM

CLEVIS - CABLE, 5/16"
0000833 MTM

PIN - CABLE, CLEVIS, 5/16"
0000834 MTM

CLEVIS AND PIN ASSY
0046531 MTM

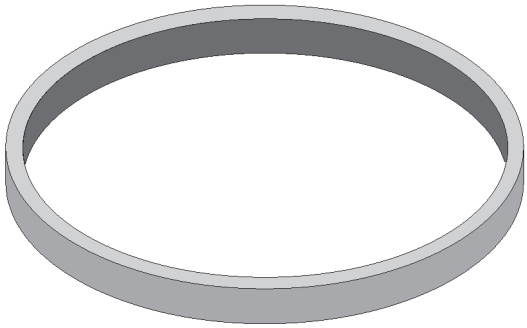

SEAL - ROD, 1/4" CABLE
0000822 MTM

SEAL - ROD, 5/16" CABLE
0000884 MTM

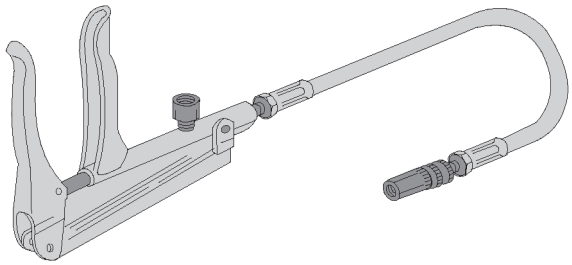

GUN - LUBE, 60 SERIES

0000861 MTM

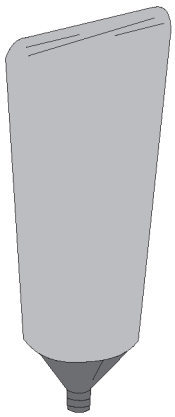

LUBE - CABLE (TUBE)

1171734 MTM

HD & HDP SERIES

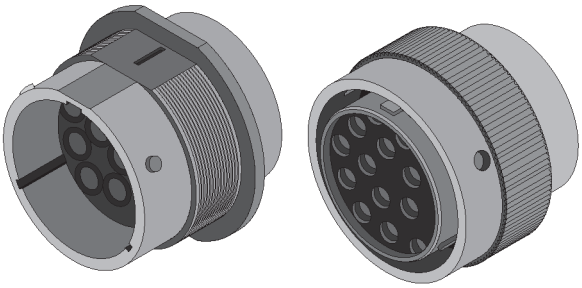

PLUG - DEUTSCH, 14 PIN

1104517 MTM HD36-18-14SN

RECEPTACLE - DEUTSCH, 14 PIN

0128821 MTM HD34-18-14-PN

PLUG - DEUTSCH, 14 PIN

1182825 MTM HD34-18-8PN

RECEPTACLE - DEUTSCH, 8 PIN

1182824 MTM HD34-18-8SN

PLUG - DEUTSCH, 31 PIN

0128775 MTM HD36-24-31ST

RECEPTACLE - DEUTSCH, 31 PIN

0128776 MTM HD34-24-31PT

RECEPTACLE - DEUTSCH, 8 PIN

1221713 MTM HD24-18-8PN

RECEPTACLE - DEUTSCH, 14 PIN

1105442 MTM HDP24-18-14PN

PLUG - DEUTSCH, 14 PIN

1105443 MTM HDP26-18-14SN

CONNECTOR - DEUTSCH, 9 PIN

1140791 MTM HDP224-24-9PN

CONNECTOR - DEUTSCH, 24-9 SOC

1225794 MTM HDP24-24-9SN

RECEPTACLE - DEUTSCH, 9 PIN

1182821 MTM HDP24-24-16PE

SOCKET - DEUTSCH, 16 PIN

1182848 MTM HDP26-24-16SE

RECEPTACLE - DEUTSCH, 16 PIN

2HB58 MTM HDP24-24-16PN

SOCKET - DEUTSCH, 16 PIN

1182859 MTM HDP26-24-16SN

RECEPTACLE - DEUTSCH, 16 PIN

1182820 MTM HDP24-24-16SN

SOCKET - DEUTSCH, 16 PIN

1182847 MTM HDP26-24-16PN

RECEPTACLE - DEUTSCH, 16 PIN

1105447 MTM HDP24-24-18PN

SOCKET - DEUTSCH, 18 PIN

1105443 MTM HDP26-24-18SN

RECEPTACLE - DEUTSCH, 19 PIN
1105446 MTM HDP24-24-19PN

SOCKET - DEUTSCH, 19 PIN
1103346 MTM HDP26-24-19SN

RECEPTACLE - DEUTSCH, 21 PIN
1105445 MTM HDP24-24-21PN

SOCKET - DEUTSCH, 21 PIN
1105440 MTM HDP26-24-21SN

RECEPTACLE - DEUTSCH, 23 PIN
0128797 MTM HDP24-24-23PN

SOCKET - DEUTSCH, 23 PIN
1100322 MTM HDP26-24-23SN

RECEPTACLE - DEUTSCH, 23 PIN
1236359 MTM HDP24-24-23SN

SOCKET - DEUTSCH, 23 PIN
1236358 MTM HDP26-24-23PN

RECEPTACLE - DEUTSCH, 29 PIN
0128039 MTM HDP24-24-29PE

SOCKET - DEUTSCH, 29 PIN
1105444 MTM HDP26-24-29SE

RECEPTACLE - DEUTSCH, 29 PIN
1188080 MTM HDP24-24-31PT

RECEPTACLE - DEUTSCH, 31 PIN
1105441 MTM HDP24-24-31PN

DT SERIES

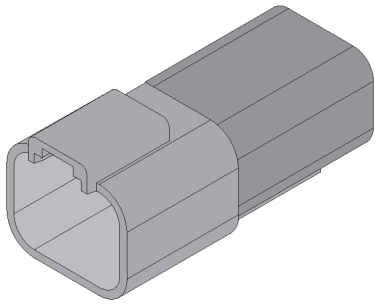

CONNECTOR - 2 PIN RECEPTACLE
1131487 MTM DT04-2P

CONNECTOR - 2 PIN SOCKET
1131485 MTM DT06-2S

CONNECTOR - 3 PIN RECEPTACLE
1131490 MTM DT04-3P

CONNECTOR - 3 PIN SOCKET
1131488 MTM DT06-3S

CONNECTOR - 4 PIN RECEPTACLE
1131494 MTM DT04-4P

CONNECTOR - 4 PIN SOCKET
1131492 MTM DT06-4S

CONNECTOR - 6 PIN RECEPTACLE
1131508 MTM DT04-6P

CONNECTOR - 6 PIN SOCKET
1108332 MTM DT06-6S

CONNECTOR - 8 PIN RECEPTACLE
1131499 MTM DT04-8P

CONNECTOR - 8 PIN SOCKET
1131497 MTM DT06-8S

DTM SERIES

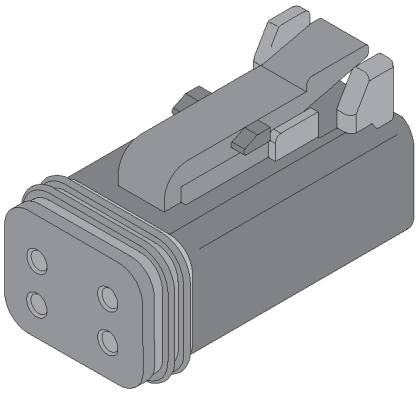

CONNECTOR - MINI, 2 PIN RECEPTACLE
1225785 MTM DTM04-2P

CONNECTOR - MINI, 2 PIN PLUG
8KK498 MTM DTM06-2S

CONNECTOR - MINI, 3 PIN RECEPTACLE
3525099 MTM DTM04-3P

CONNECTOR - MINI, 3 PIN PLUG
1225713 MTM DTM06-3S

CONNECTOR - MINI, 4 PIN RECEPTACLE
1225723 MTM DTM04-4P

CONNECTOR - MINI, 4 PIN PLUG
1225718 MTM DTM06-4S

CONNECTOR - MINI, 6 PIN RECEPTACLE
1225726 MTM DTM04-6P

CONNECTOR - MINI, 6 PIN PLUG
1225725 MTM DTM06-6S

CONNECTOR - MINI, 12 PIN RECEPTACLE
1225729 MTM DTM04-12PA

CONNECTOR - MINI, 12 PIN PLUG
1182685 MTM DTM06-12SA

CONNECTOR - MINI, 2 PIN RECEPTACLE, BLK
1225712 MTM DTM04-2P-E004

CONNECTOR - MINI, 2 PIN PLUG, BLK
1225711 MTM DTM04-2S-E004

WEDGE LOCKS

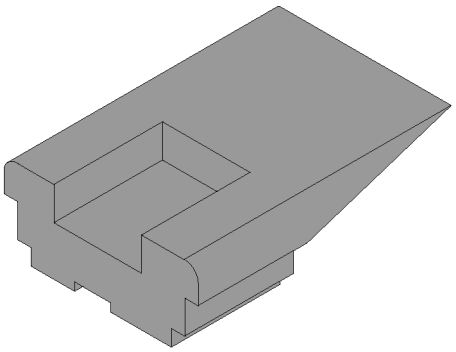

WEDGE - LOCKING, 2 SOCKET PLUG
1131486 MTM W2S-P12

WEDGE - LOCKING, 2 PIN RECEPTACLE
1131507 MTM W2P

WEDGE - LOCKING, 3 SOCKET PLUG
1131489 MTM W3S

WEDGE - LOCKING, 2 PIN RECEPTACLE
2HB270 MTM W3P

WEDGE - LOCKING, 4 SOCKET PLUG
1131493 MTM W4S

WEDGE - LOCKING, 4 PIN RECEPTACLE
1131495 MTM W4P

WEDGE - LOCKING, 6 SOCKET PLUG
1108333 MTM W6S

WEDGE - LOCKING, 6 PIN RECEPTACLE
2HB192 MTM W6P

WEDGE - LOCKING, 8 SOCKET PLUG
1131498 MTM W8S

WEDGE - LOCKING, 8 PIN RECEPTACLE
1131500 MTM W8P

WEDGE - LOCKING, 12 SOCKET PLUG
1131501 MTM W12S

WEDGE - LOCKING, 2 PIN RECEPTACLE
0128066 MTM W12P

WEDGE - LOCKING, 2 SOCKET PLUG
1131486 MTM W2S-P12

WEDGE - LOCKING, 2 PIN RECEPTACLE
1131507 MTM W2P

CONNECTOR - W/L FOR DTM06-2S
1225766 MTM WM-2S

CONNECTOR - W/L FOR DTM04-2P
8KK149 MTM WM-2P

CONNECTOR - W/L FOR DTM06-3S
1225770 MTM WM-3S

CONNECTOR - W/L FOR DTM04-3P
3525100 MTM WM-3P

CONNECTOR - W/L FOR DTM06-4S
1225768 MTM WM-4S

CONNECTOR - W/L FOR DTM04-4P
1225769 MTM WM-4P

CONNECTOR - W/L FOR DTM06-6S
1225772 MTM WM-6S

CONNECTOR - W/L FOR DTM04-4P
1225773 MTM WM-6P

CONNECTOR - W/L FOR DTM06-08SA

1225774 MTM WM-08SA

CONNECTOR - W/L FOR DTM04-08PA

1225775 MTM WM-08PA

CONNECTOR - W/L FOR DTM06-12S

1182687 MTM WM-12S

CONNECTOR - W/L FOR DTM06-12P

1225776 MTM WM-12P

DEUTSCH ACCESSORIES

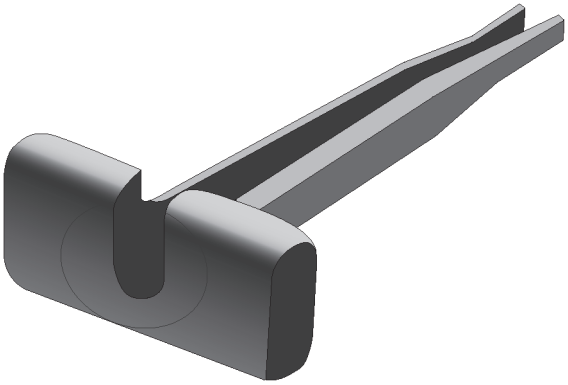

TOOL - EXTRACTION, 12 AWG, YELLOW

1107737 MTM 114010

TOOL - EXTRACTION, 14-16 AWG, GREEN

1104484 MTM 0411-291-1405

TOOL - EXTRACTION, 20-24 AWG, RED

1107737 MTM 114010

TOOL - EXTRACTION, 14-16 AWG, BLUE

0120062 MTM 0411-310-1605

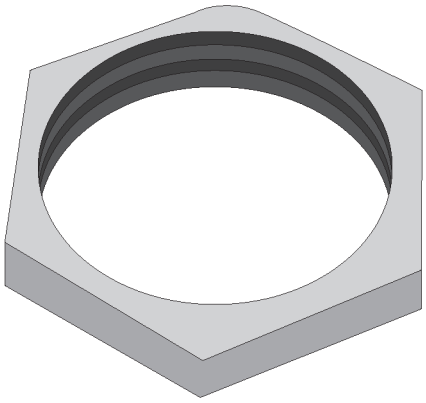

NUT - PANEL, #18 ALUM

1101754 MTM 114020-90

NUT - PANEL, #18 PLASTIC

1183131 MTM 2411-002-1805

NUT - PANEL, #24 ALUM

0128779 MTM 112263-90

NUT - PANEL, #24 PLASTIC

1183133 MTM 2411-001-2405

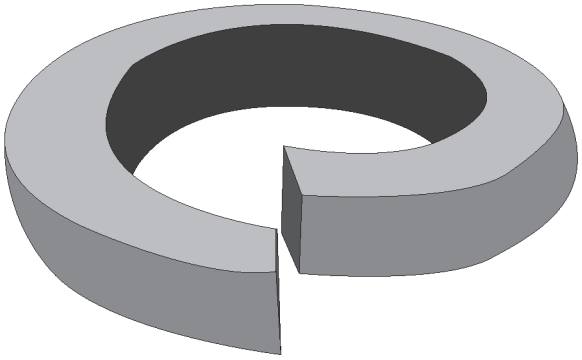

WASHER - LOCK, #18 ALUM

0128796 MTM 114021

WASHER - LOCK, #18 PLASTIC

1183135 MTM 2414-002-1800

WASHER - LOCK, #24 ALUM

0120009 MTM 112264

WASHER - LOCK, #24 PLASTIC

1183137 MTM 2414-001-2486

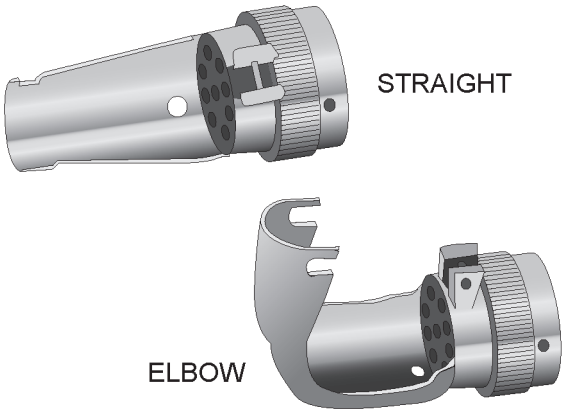

RELIEF - STRAIN, STRAIGHT, #18 ALUM

1146730 MTM WHDS-18-1

RELIEF - STRAIN, STRAIGHT, #24 ALUM

1146731 MTM WHDS-24-1

RELIEF - STRAIN, ELBOW, #18 ALUM

1146732 MTM WHDS-18-2

RELIEF - STRAIN, ELBOW, #24 ALUM

1146733 MTM WHDS-24-2

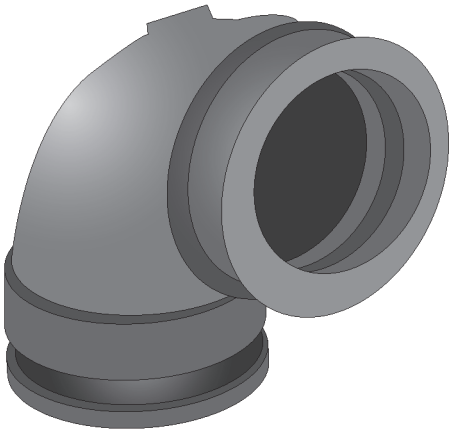

ELBOW - PLASTIC, 90 DEG, WIRE LOOM

1182359 MTM 2428-004-2405

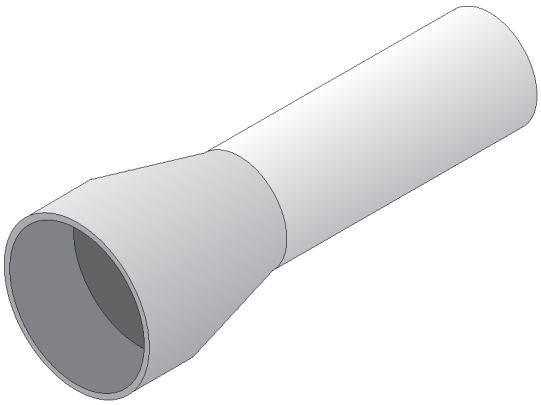

COVER - LINE, DEUTSCH

1100961 MTM HD30-24BT

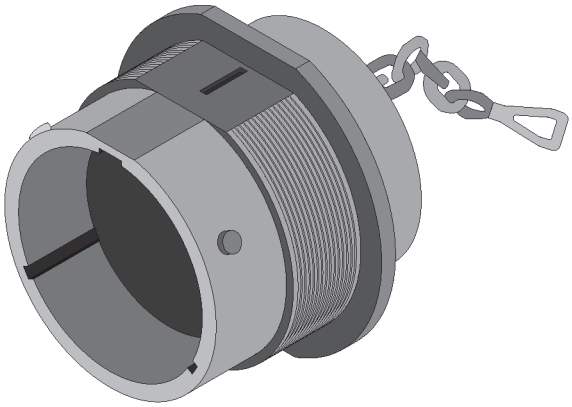

CAP - DUST, 24 MALE

0128777 MTM HDC34-24

CAP - DUST, 24 FEMALE

0128778 MTM HDC36-24 9723

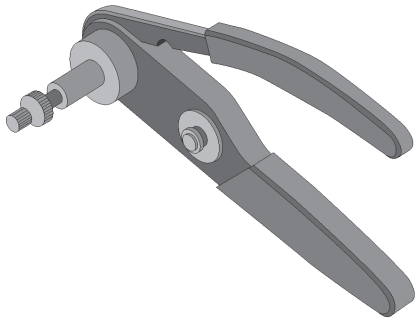

TOOL - CRIMP, DEUTSCH PIN

0120063 MTM HDT-48-00

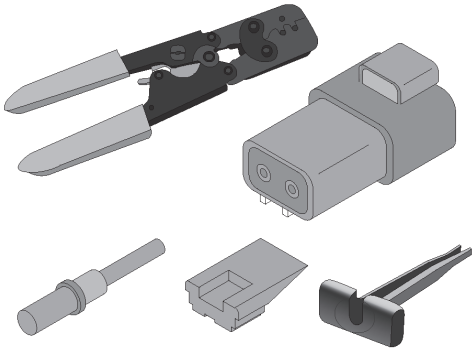

DEUTSCH KIT

1107264 MTM

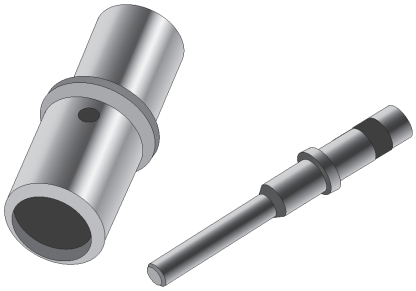

PIN - CONNECTOR, FEMALE, 6 AWG

1225795 MTM 0462-203-04141

PIN - CONNECTOR, MALE, 8-10 AWG

1105453 MTM 0460-204-08141

PIN - CONNECTOR, FEMALE, 12-14 AWG

6HR634 MTM 0462-203-12141

PIN - CONNECTOR, MALE, 12-14 AWG

1HB799 MTM 0460-204-12141

1PIN - CONNECTOR, MALE, 14-16 AWG

1100713 MTM 0460-215-16141

PIN - CONNECTOR, MALE, 20-24 AWG

1131504 MTM 0460-202-20141

PIN - CONNECTOR, MALE, 16-20 AWG

0128781 MTM 0462-202-16141

PIN - CONNECTOR, FEMALE, 16-20 AWG

0128782 MTM 0462-201-16141

WEATHER PACK

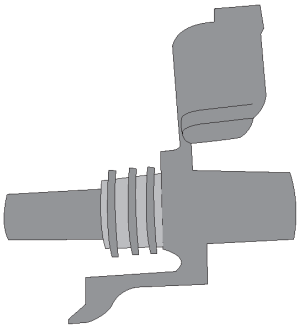

HOUSING - 1 PLUG FEMALE

0110240 MTM

HOUSING - 1 PLUG MALE

0110239 MTM

HOUSING - 2 PLUG FEMALE

0110242 MTM

HOUSING - 2 PLUG MALE

0110241 MTM

HOUSING - 3 PLUG FEMALE

0110244 MTM

HOUSING - 3 PLUG MALE

0110243 MTM

HOUSING - 4 PLUG FEMALE

0110246 MTM

HOUSING - 4 PLUG MALE

0110245 MTM

HOUSING - 6 PLUG FEMALE

0110248 MTM

HOUSING - 6 PLUG MALE

0110247 MTM

HOUSING - 2 PLUG FEMALE

0110242 MTM

HOUSING - 2 PLUG MALE

0110241 MTM

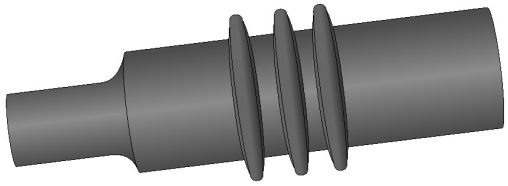

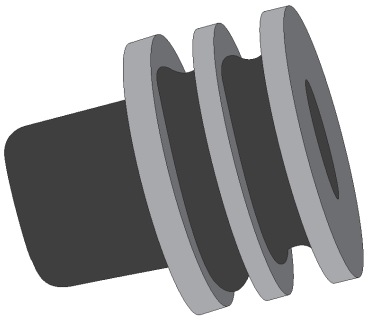

PLUG - CAVITY, GREY

0110238 MTM

PLUG - CAVITY, GREEN

0110249 MTM

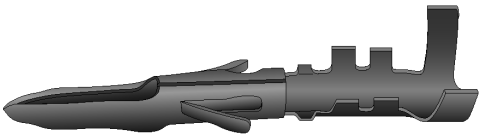

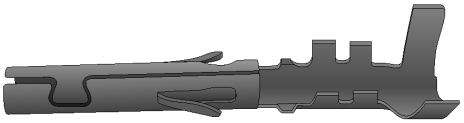

TERMINAL - MALE, 16-14 GA

0110236 MTM

TERMINAL - FEMALE, 16-14 GA

0110237 MTM

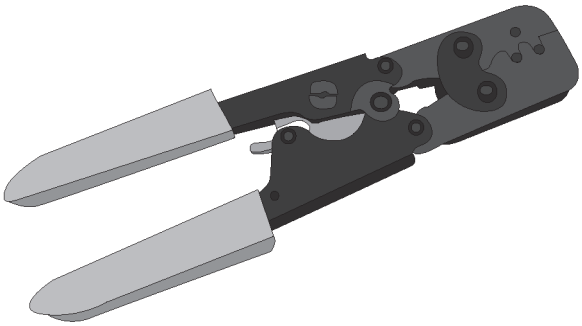

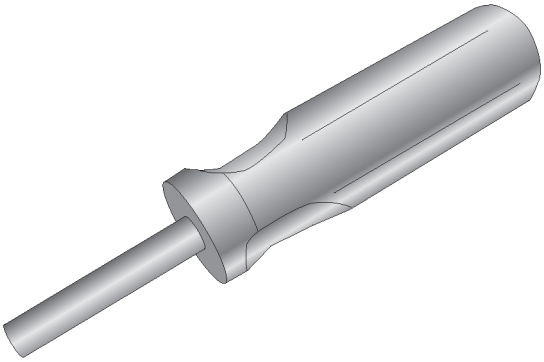

CRIMPER - WEATHER PACK

0002040 MTM

TOOL - REMOVAL, WEATHERPACK PIN

0002041 MTM

RUBBER PANEL GROMMETS

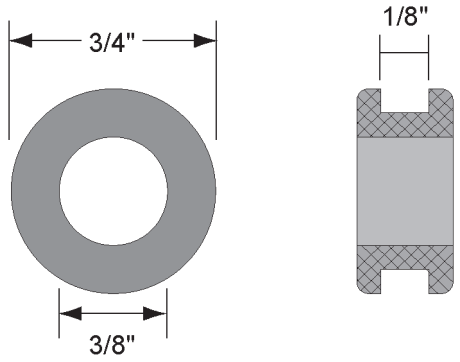

GROMMET - 1/8” X 3/8” ID X 3/4” OD

1137466 MTM

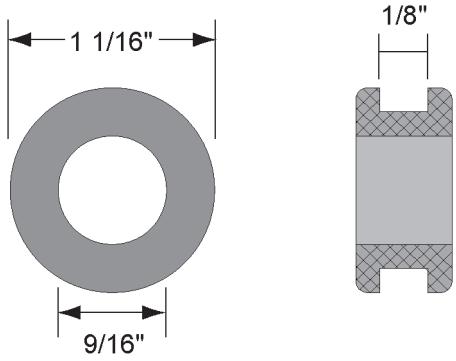

GROMMET - 1/8” X 9/16” ID X 11/16” OD

1137467 MTM

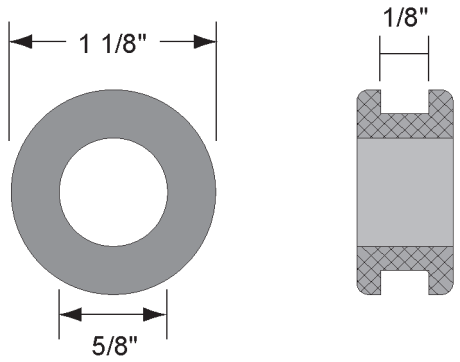

GROMMET - 1/5” X 5/8” ID X 1 1/8” OD

1107501 MTM

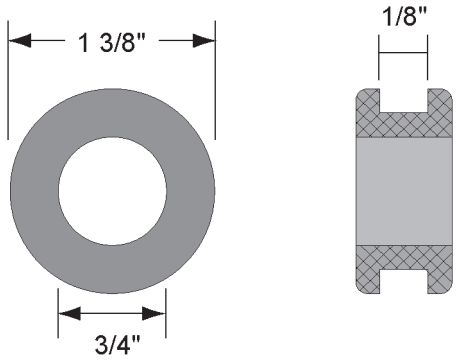

GROMMET - 1/8” X 3/4” ID X 1 3/8” OD

1137468 MTM

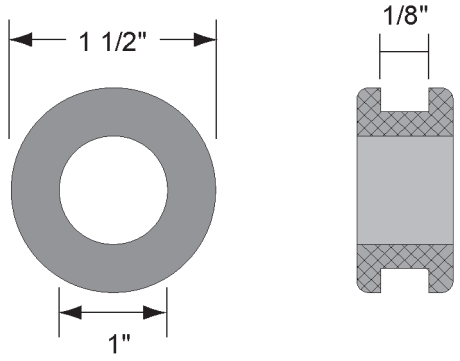

GROMMET - 1/8” X 1” ID X 1 1/2” OD

1137469 MTM

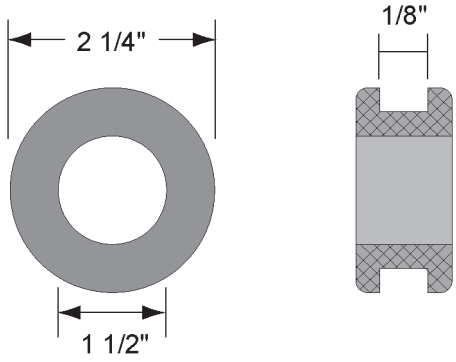

GROMMET - 1/8” X 1 1/2” ID X 2 1/8” OD

1137471 MTM

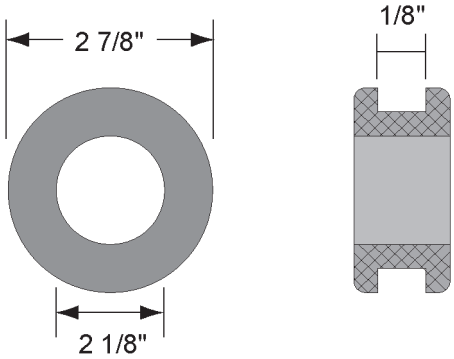

GROMMET - 1/8” X 2 1/8” ID X 2 7/8” OD

1137472 MTM

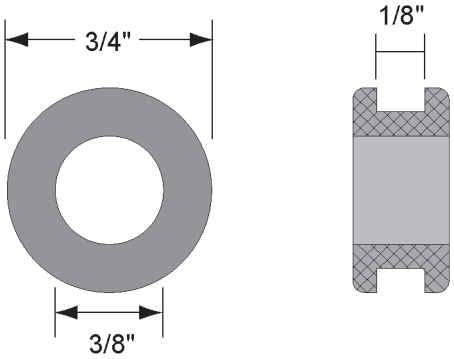

GROMMET - 1/4” X 3/8” ID X 3/4” OD

0115161 MTM

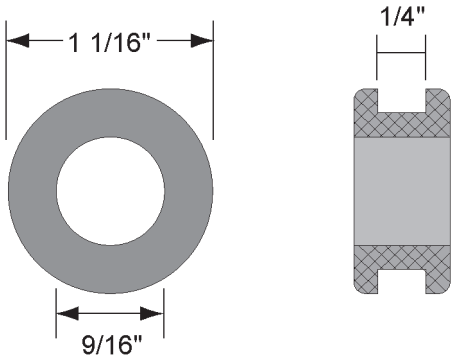

GROMMET - 1/4” X 3/8” ID X 3/4” OD

0115162 MTM

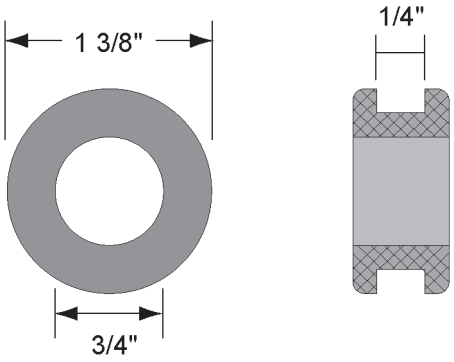

GROMMET - RUBBER, 3/4” ID

0115163 MTM

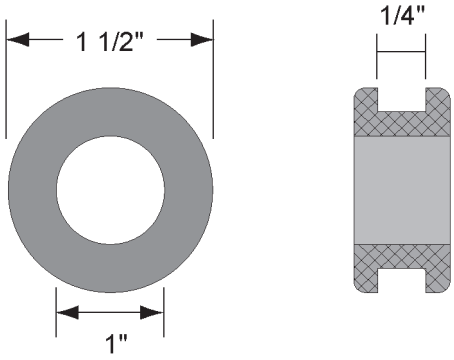

GROMMET - 1/4” X 1” ID X 1 1/2” OD

1106938 MTM

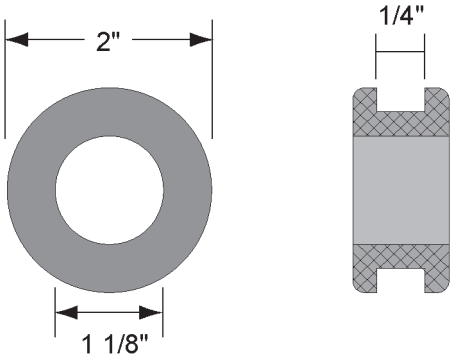

GROMMET - 1 1/4” X 1/4”

1103991 MTM

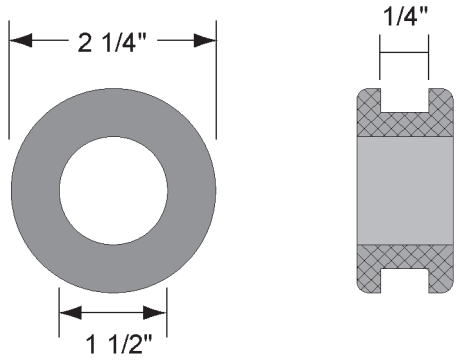

GROMMET - 1/4” X 1 1/2” ID X 2 1/8” OD

1106939 MTM

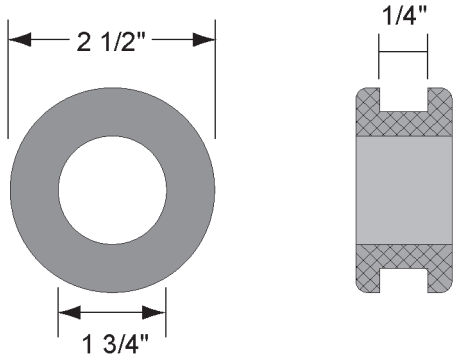

GROMMET - 1/4” X 1 3/4” ID X 2 1/2” OD

1137479 MTM

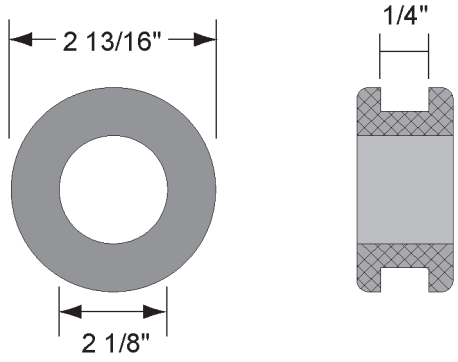

GROMMET - 1/4” X 2 1/8” ID X 2 13/16” OD

1106940 MTM

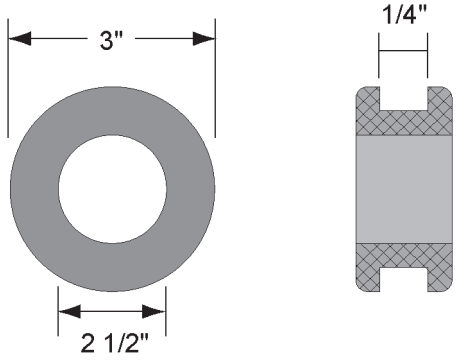

GROMMET - 1/4” X 2 1/2” ID X 3” OD

0115155 MTM

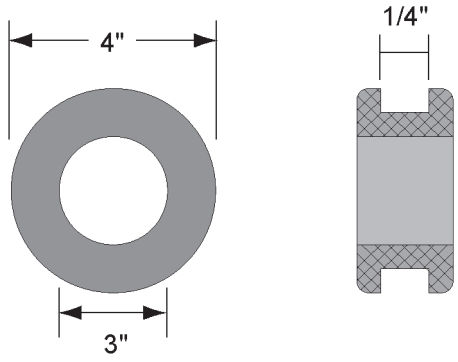

GROMMET - 1/4” X 3” ID X 4” OD

1132298 MTM

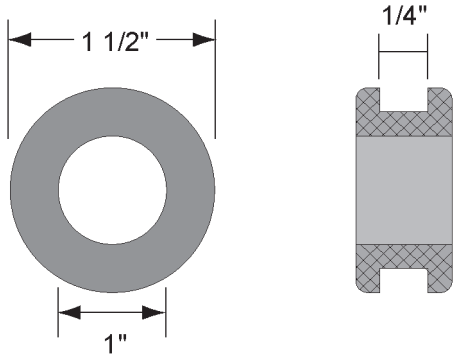

GROMMET - 1/4” X 1” ID X 1 1/2” OD

1137481 MTM

LIGHT ASSEMBLY GROMMETS

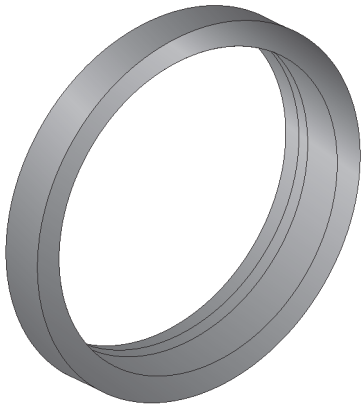

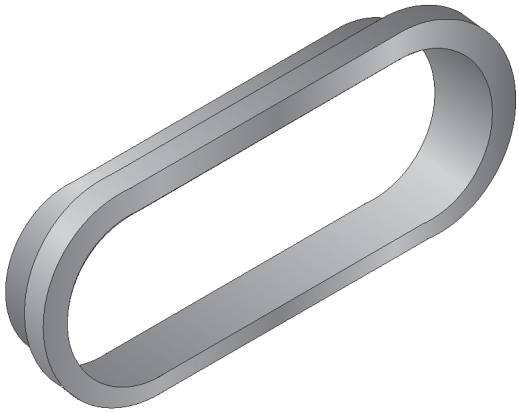

GROMMET - RUBBER, 2 1/2" LAMP
1130037 MTM

GROMMET - RUBBER, 4" LIGHT
0110063 MTM

GROMMET - ROUND, 4" LIGHT
1235208 MTM

GROMMET - ROUND, 2 1/2"
1235215 MTM

GROMMET - ROUND, CLOSED BACK, 4"
1237884 MTM

GROMMET - CLOSED BACK, 2 1/2" (LED LTS)
1240516 MTM

GROMMET - OPEN BACK, 2 1/2"
1240517 MTM

GROMMET - LIGHT, STOP/TURN/TAIL
1255833 MTM

GROMMET - RUBBER, OVAL LIGHT
0128113 MTM

GROMMET - OVAL, 6"
1235213 MTM

GROMMET - OPEN BACK, OVAL
1263132 MTM

THIS PAGE INTENTIONALLY LEFT BLANK

Air and Water Valves, Regulators, Gauges

ADVANCE / TEREX

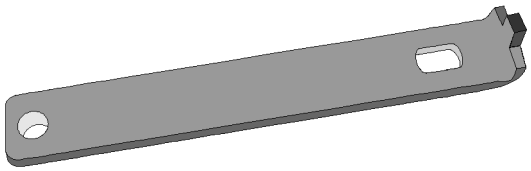

HANDLE - BALL VALVE, STAINLESS STEEL

1226430 MTM 19479 ADV

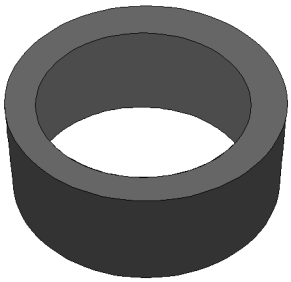

O-RING - SIGHT GAUGE TUBE

1134197 MTM 15453 ADV

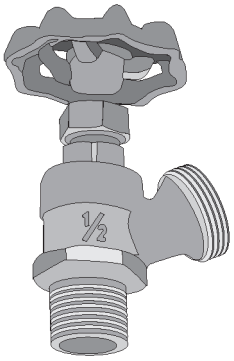

VALVE - BOILER DRAIN, 1/2”

1134037 MTM 13106 ADV

VALVE - BOILER DRAIN, 3/4”

1134133 MTM 14218 ADV

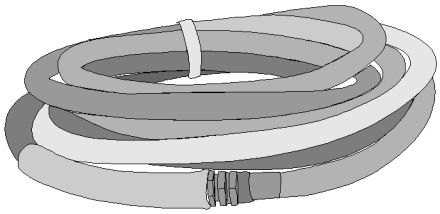

HOSE - WASH DOWN, 1/2” X 25’, 200° F, 300 PSI

1134202 MTM 15777 ADV

HOSE - WASH DOWN, 5/8” X 25’, 200 PSI

1179851 MTM

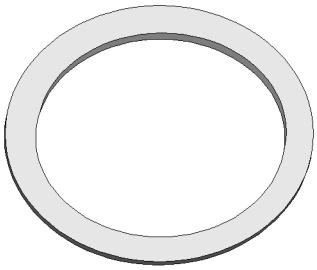

WASHER - BRASS, SIGHT GAUGE SEAL

1134134 MTM 14220 ADV

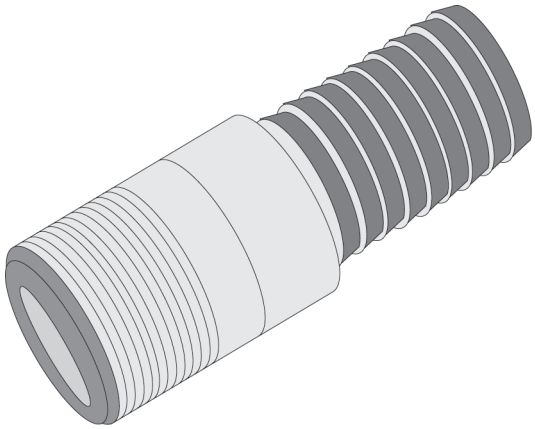

ADAPTER - 1” PIPE X 1” HOSE

0082117 MTM 17356 ADV

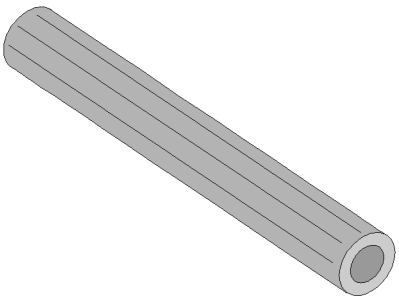

TUBE - SIGHT GAUGE, 5/8" PER 6' (WILL DO 2 TRUCKS)

0082386 MTM 3-009-023 ADV

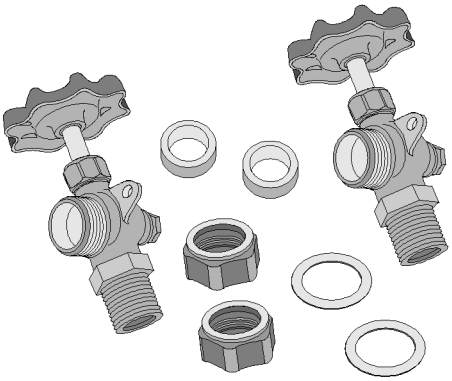

VALVE SET - WATER TANK GAUGE

1134039 MTM 13209 ADV

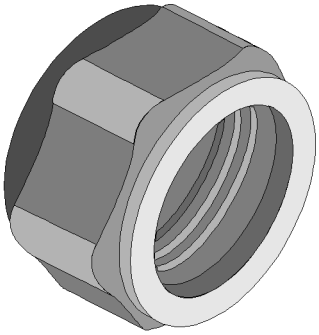

NUT - SIGHT GAUGE VALVE

1143261 MTM 7400-00012 ADV

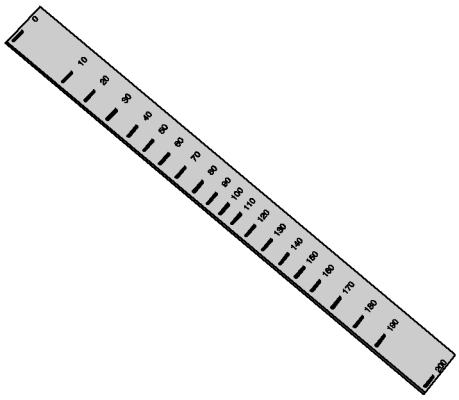

MARKER - WATER TANK, 120 GALLON

1143741 MTM 12708 ADV

MARKER - WATER TANK, 150 GALLON

1143742 MTM 12687 ADV

MARKER - WATER TANK, 200 GALLON

1143743 MTM 12688 ADV

MARKER - WATER TANK, 250 GALLON

1143744 MTM 12690 ADV

MARKER - WATER TANK, 120 GALLON/METRIC

1143745 MTM 3-009-064 ADV

MARKER - WATER TANK, 150 GALLON/METRIC

1143746 MTM 3-009-024 ADV

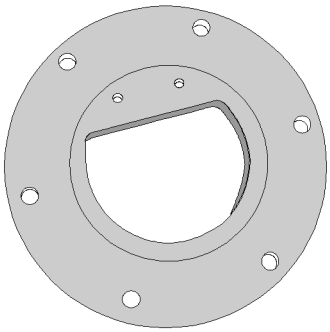

PLATE - MOUNTING, FLAPPER VALVE

1111074 MTM 12676 ADV

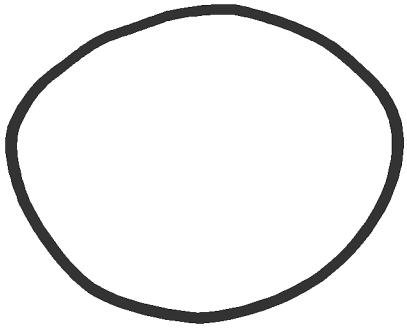

O-RING - FLAPPER VALVE LID

1133937 MTM 10017 ADV

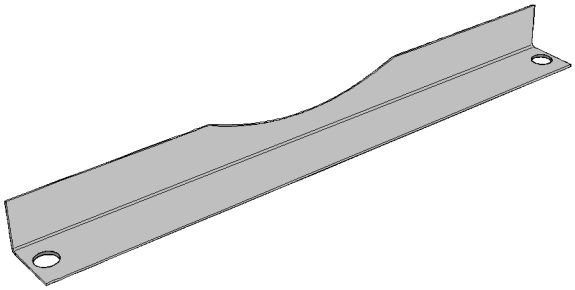

BRACKET - SIGHT GAUGE MOUNT, STEEL

1143239 MTM 12682 ADV

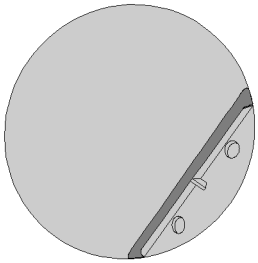

VALVE - FLAPPER, WATER TANK, ADV

0000774 MTM 12678 ADV

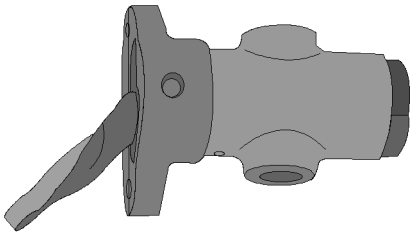

VALVE - AIR, TW1

2DE514 MTM 12357 ADV

CBMW

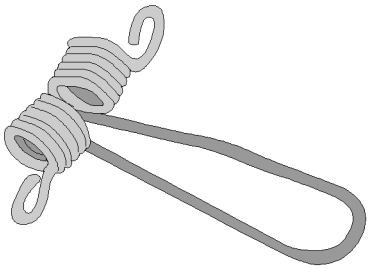

SPRING - FLAPPER VALVE

0010012 MTM 12677 ADV

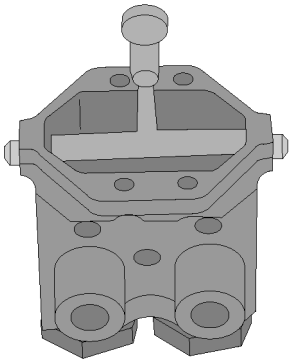

SWITCH - CHARGE HOPPER AIR LIFT

0085232 MTM 80100782 CBMW

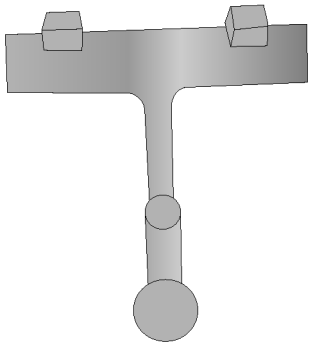

SWITCH - HANDLE FOR AIR

0101634 MTM

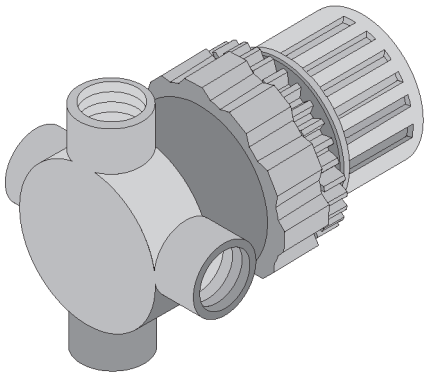

REGULATOR - AIR, 1/4", 0-60PSI

0082403 MTM 1520987 CCB

CCB

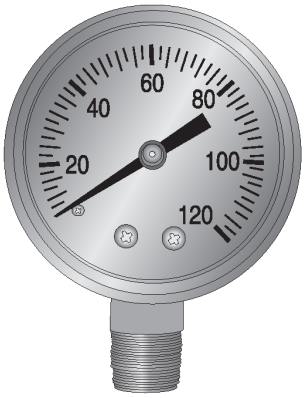

GAUGE - AIR, 1/4" NPT, (100 PSI)

0016595 MTM 1170272 CCB

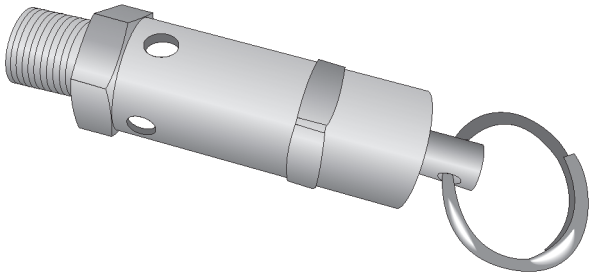

VALVE - AIR SAFETY, (55 PSI)

0010024 MTM 1520197 CCB

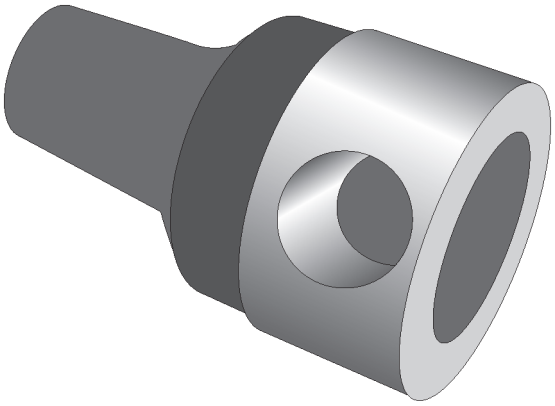

REGULATOR - AIR, (50 PSI)

0014553 MTM 1521166 CCB

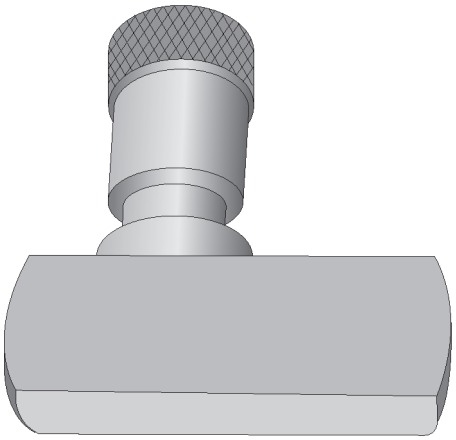

VALVE - NEEDLE, BALANCE AIR, 1/4" NPT

0014942 MTM 1520542 CCB

GAUGE - AIR, PRESSURE, 0-100

0011539 MTM 1170013 CCB

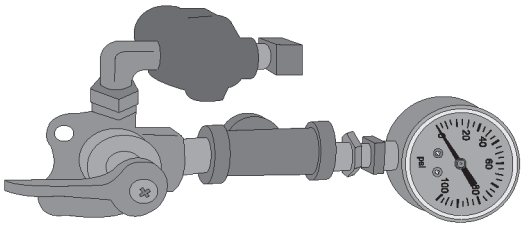

VALVE ASSY - AIR GAUGE

0012362 MTM 5053745 CCB

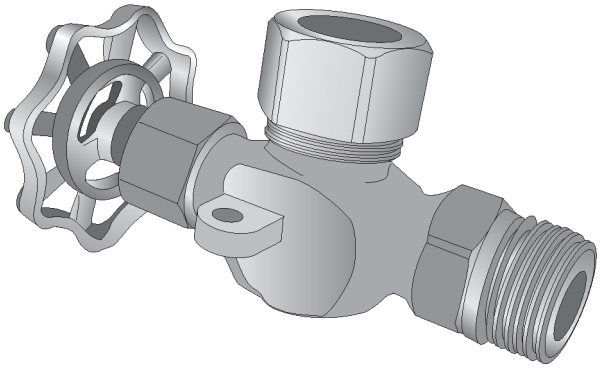

VALVE - GAUGE, UPPER

0082412 MTM 1520080 CCB

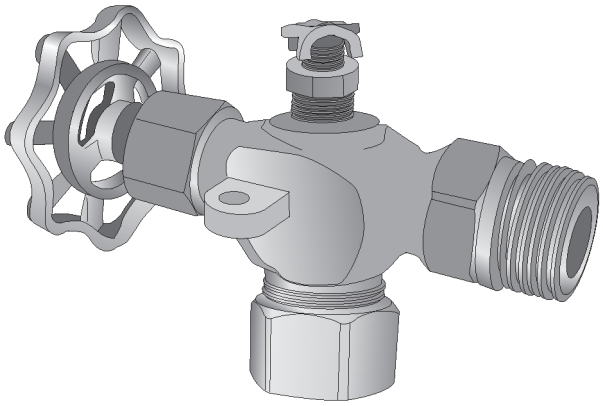

VALVE - GUAGE, LOWER, W/DRAIN

0082413 MTM 1520081 CCB

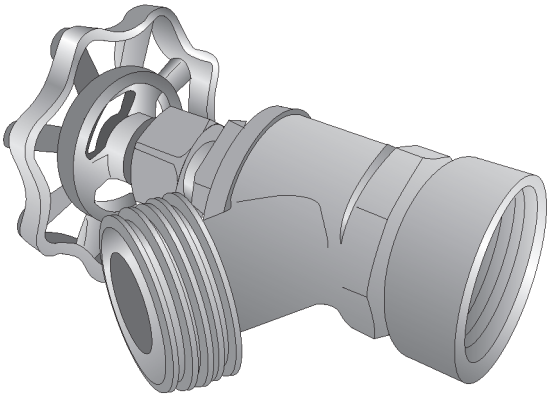

FAUCET - HOSE, CHA, 3/4”

0016502 MTM 1520077 CCB

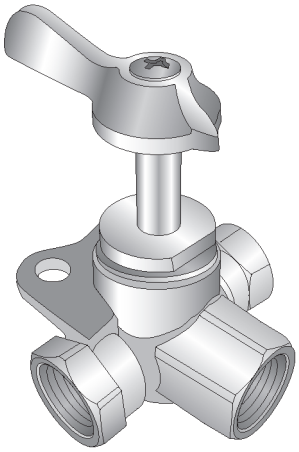

VALVE - AIR, 3-WAY

0082404 MTM 1520020 CCB

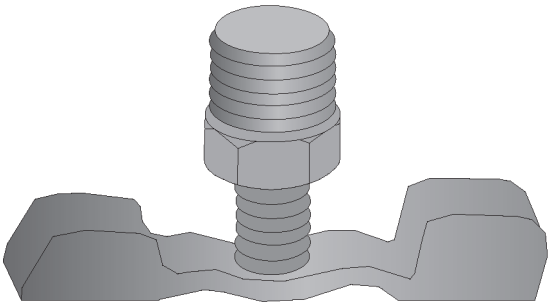

PETCOCK - 1/8" NPT

0201600 MTM 1570357 CCB

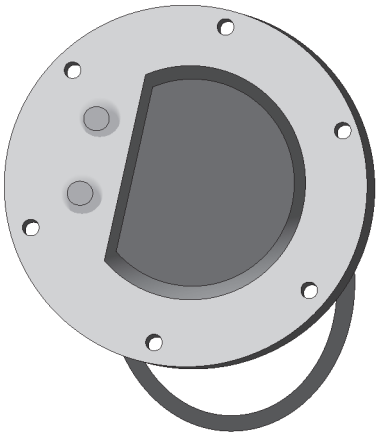

FLOPPER ASSY - CHA N/S

0010053 MTM 5054169 CCB

O-RING

0014335 MTM 1691040 CCB

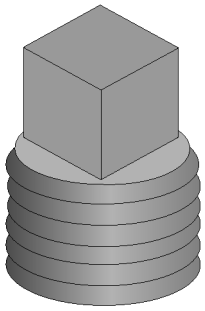

PLUG - PIPE, .375"

0015920 MTM 1573535 CCB

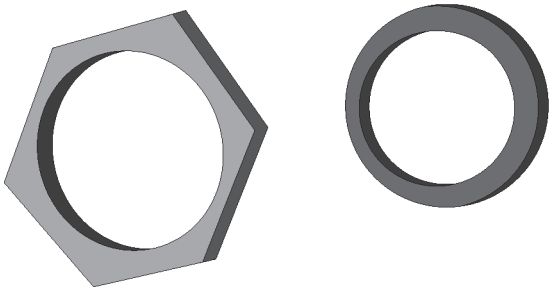

O-RING - SITE GLASS

0010021 MTM 1690710 CCB

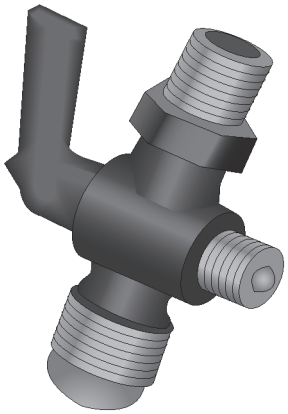

PETCOCK - AIR VALVE

0016503 MTM 1520051 CCB

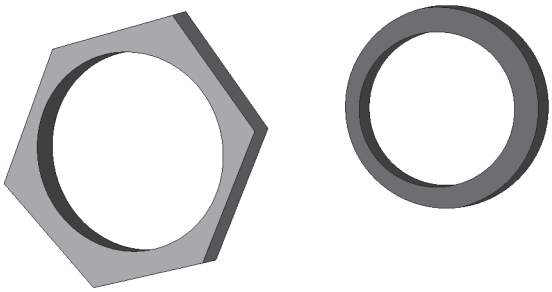

NUT - HEX, COLE HERSEE

0014750 MTM 1720971 CCB

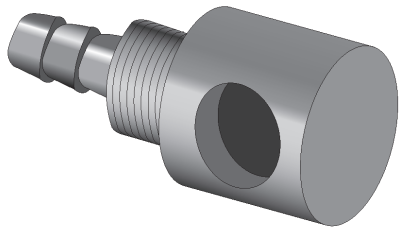

BODY - SITE GLASS, WATER TANK

0010022 MTM 5052442 CCB

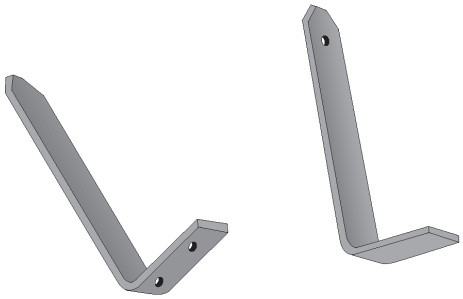

BRACKET - GAUGE, TANK

0013870 MTM 5052492 CCB

BRACKET - GAUGE, TANK

0011844 MTM 5052444 CCB

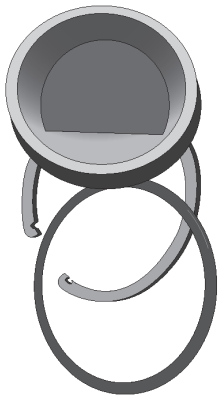

FLOPPER ASSY - CHA N/S

0010025 MTM 5050814 CCB

RETAINER - FLOPPER

0010013 MTM 1050435 CCB

O-RING - FLOPPER

0010015 MTM 1690163 CCB

FLOPPER FLANGE

0015860 MTM 5054159 CCB

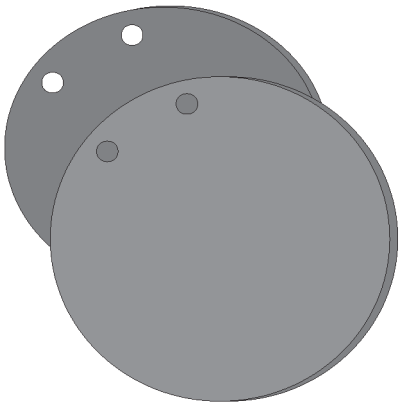

SEAL - FLOPPER, W/PLATE

0010011 MTM

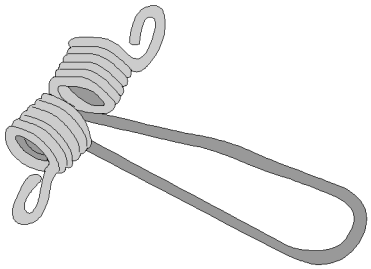

SPRING - FLOPPER

0010012 MTM 1070063 CCB

KIMBLE

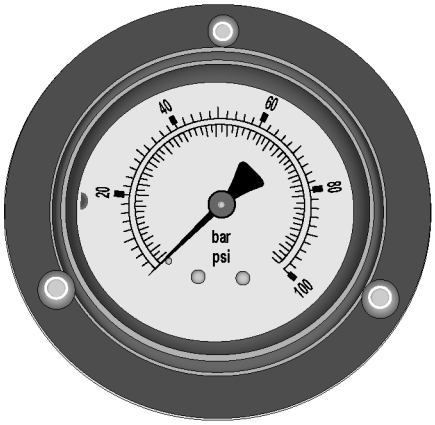

GAUGE 0-100 PSI LIQUID FILLED - 1/8" NPT CBM

1398503 MTM C95-00100-15 KIMBLE

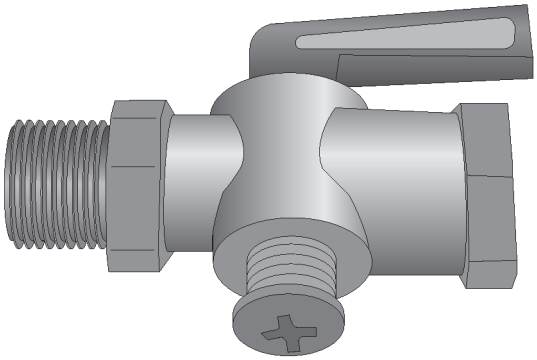

DRAIN COCK - 1/4" MPT X 1/4" FPT, 3/8"

1255772 MTM HH-00878-002 LONDON

LONDON

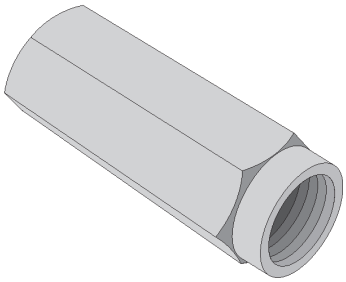

VALVE - AIR, CHECK

1256067 MTM MM-19850 LONDON

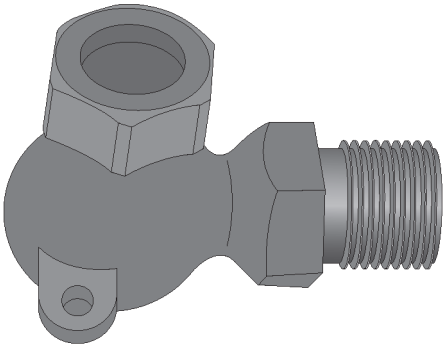

FITTING - GAUGE, UPPER

1430177 MTM MA-36290 LONDON

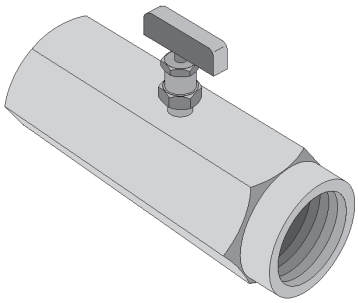

VALVE - AIR, NEEDLE

1255884 MTM HH-01192-002 LONDON

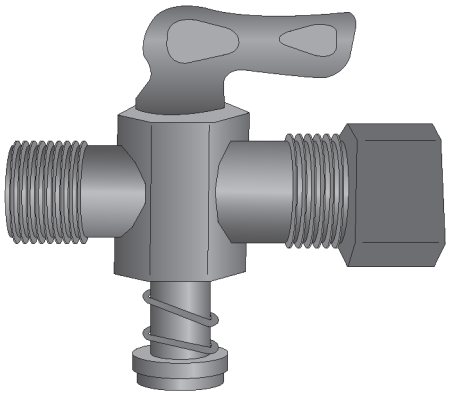

VALVE - SHUT OFF, 3/8"

1255835 MTM HH-01095-007 LONDON

MTM

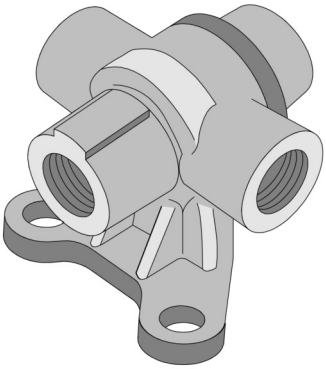

VALVE - EXHAUST, 7800

0087036 MTM

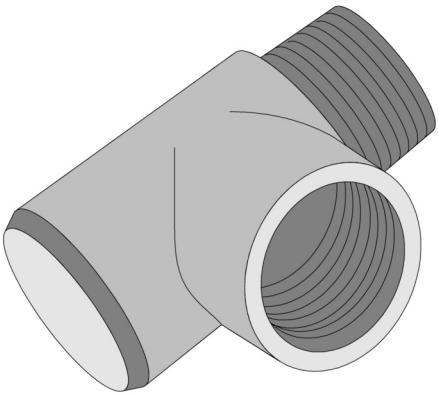

VALVE - POP OFF, 60 LB.

1507712 MTM

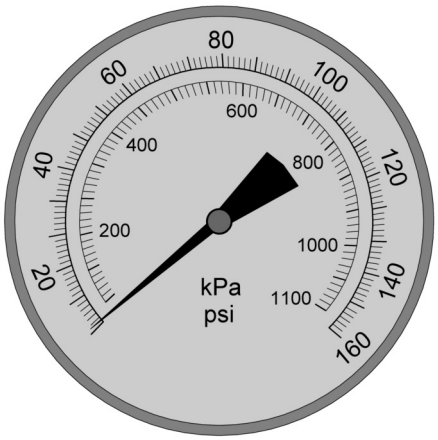

GAUGE - AIR, 0-160

0087014 MTM

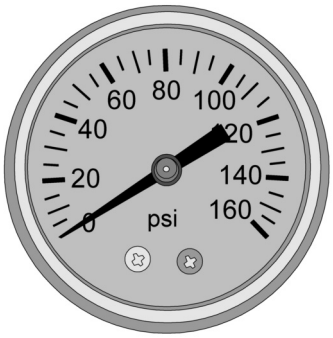

GAUGE - PUSHER, 0-160

0110131 MTM

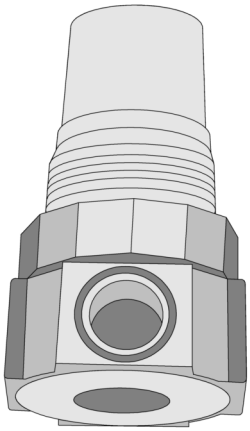

VALVE - REGULATOR, 0-125

0087011 MTM

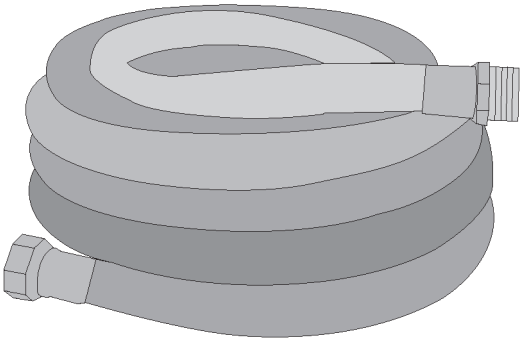

HOSE - WASHOUT,5/8" X 25'LG

0082242 MTM

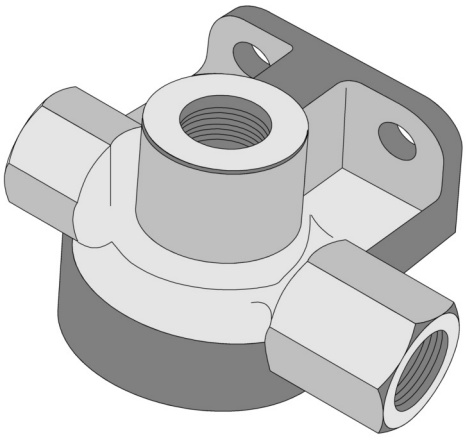

VALVE - BRAKE, QUICK RELEASE

0087015 MTM

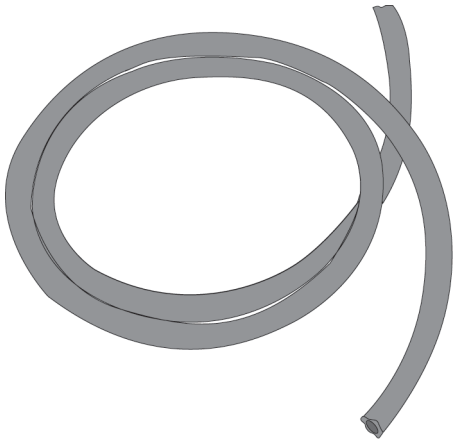

HOSE - WATER, 1” ID, 200 PSI

1142776 MTM

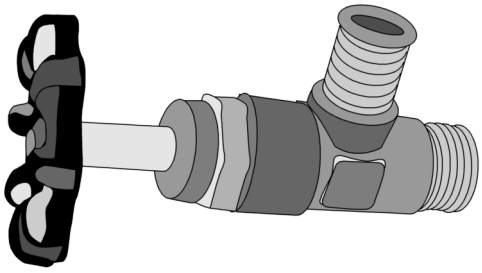

VALVE - SITE GAUGE, WATER TANK

0101291 MTM

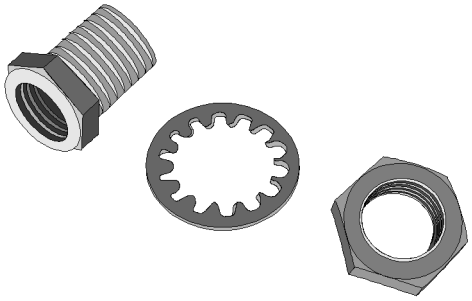

FITTING - BULKHEAD, 1/2” I.D., 1” O.D, 2” L

1138122 MTM

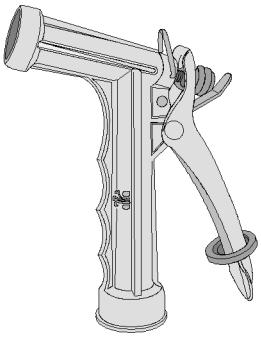

NOZZLE - WATER SPRAY

0082243 MTM

NOZZLE - SPRAY, PLASTIC GRIP

0082573 MTM

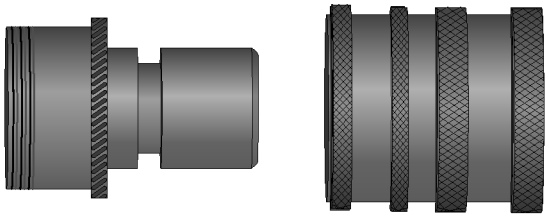

COUPLER - QUICK, GILMOUR

0082240 MTM

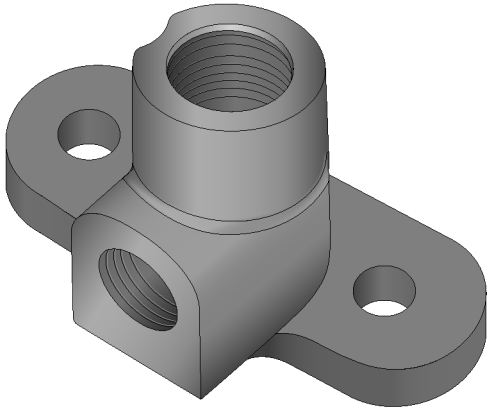

MOUNT - PORT, AIR MONITOR

0085287 MTM

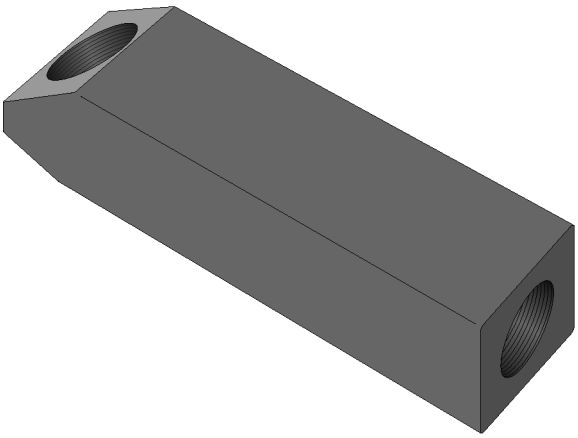

NIPPLE - ADAPTOR, TANK GAUGE

0150769 MTM

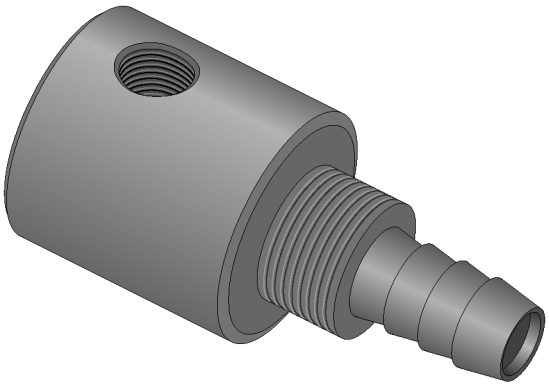

BODY - SITE GAUGE

0152774 MTM

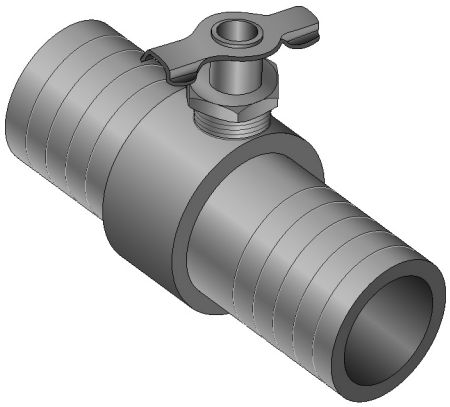

TEE - DRAIN, PLASTIC, 1” X 1“ X 1/2”

0101251 MTM

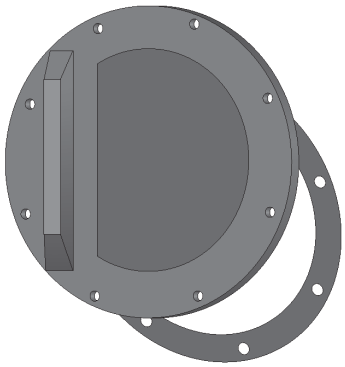

FLOPPER ASSY - TYPE IV

0150830 MTM

GASKET - FLOPPER FILLER, 6”

0115212 MTM

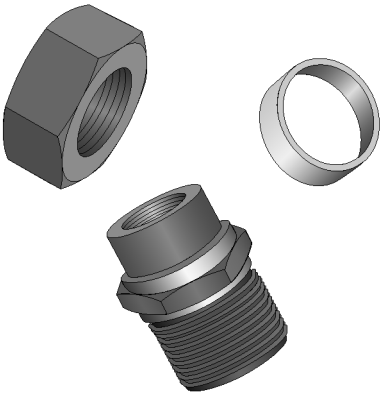

FITTING - SITE GLASS, W/COMP RING

0101563 MTM

SLEEVE - COMPRESSION

0101564 MTM

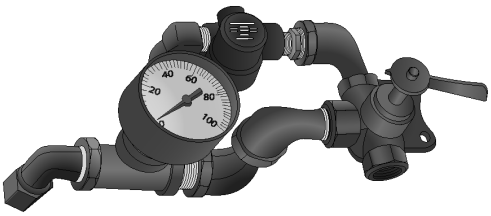

GAUGE ASSY - AIR

0000471 MTM

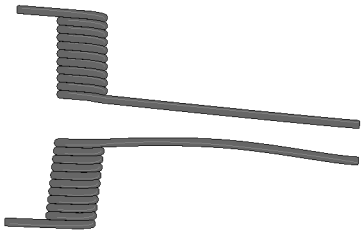

SET - SPRING, FLOPPER

0082399 MTM

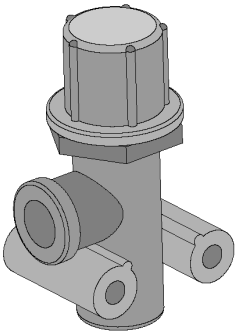

VALVE - HOLD BACK, 75 PSI

0082408 MTM

1139086 MTM

NOTE: PN 1139086 is satisfactory replacement unless the physical mounting holes that are in the 0082408 are needed.

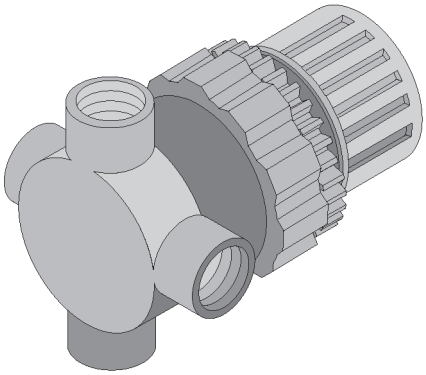

REGULATOR - AIR, .25", 0-60 PSI

0082403 MTM

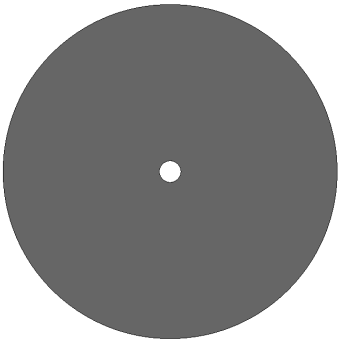

SEAL - FLOPPER, 4"

0082397 MTM

SEAL - FLOPPER, 6"

0115211 MTM

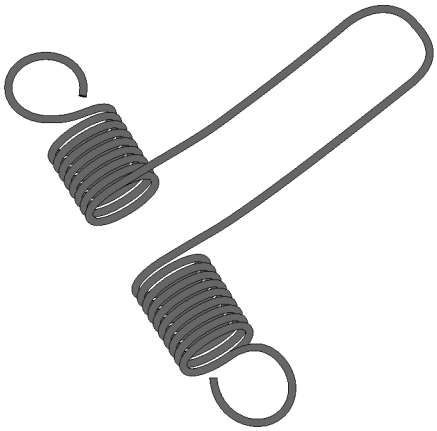

SPRING ASSY - FLOPPER

0115184 MTM

SHAFT - FLOPPER, 4”

0082393 MTM

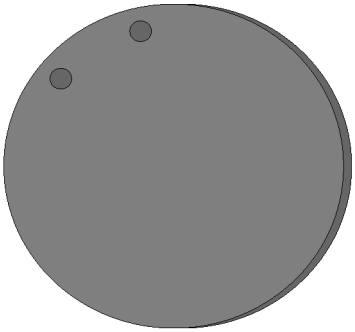

SEAL - FLOPPER, TYPE 4-1 PC

0150831 MTM

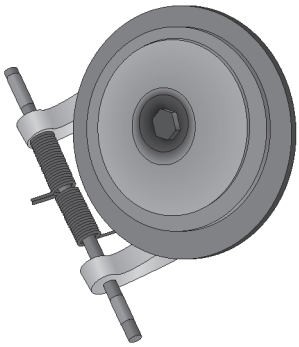

FLOPPER ASSY - 4”

0000470 MTM

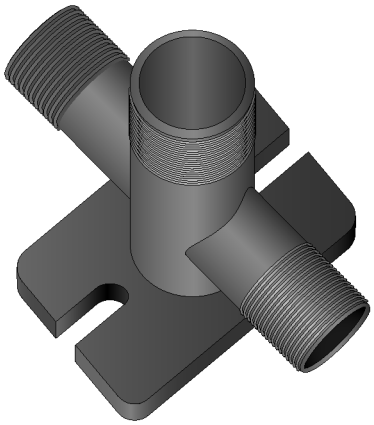

TEE - WATER, ALUM, 1 1/4” X 1 1/4” X 3/4”

0082090 MTM

TEE - WATER, STEEL PLATED, 1” X 1” X 3/4”

1137282 MTM

TEE - WATER, CAST, 1” X 1” X 3/4”

0082109 MTM

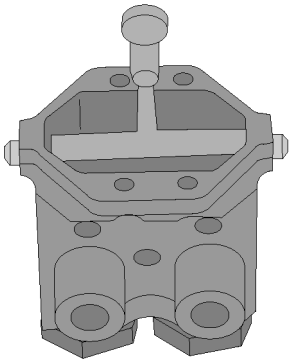

SWITCH - CHARGE HOPPER AIR LIFT

0085232 MTM

SWITCH - AIR CHUTE LOCK

0085649 MTM

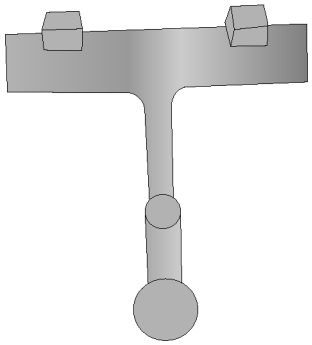

SWITCH - HANDLE FOR AIR

0101634 MTM

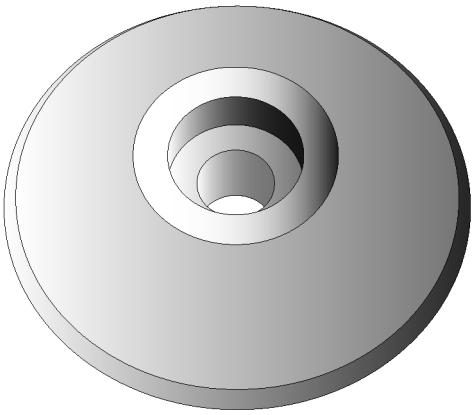

RETAINER - CASTING 6” FLOPPER

0131832 MTM

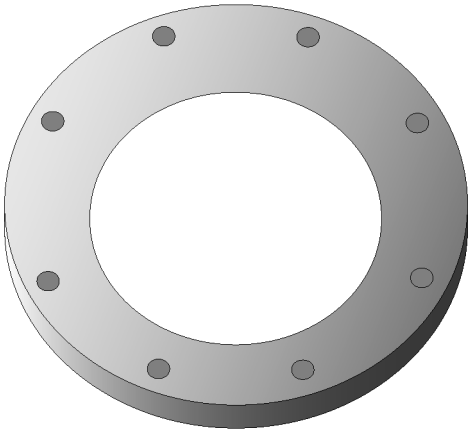

COVER - CASTING 6” FLOPPER

0131834 MTM

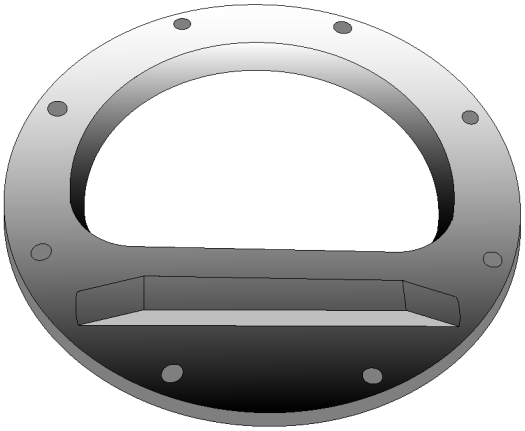

CASTING FLOPPER TOP

0150832 MTM

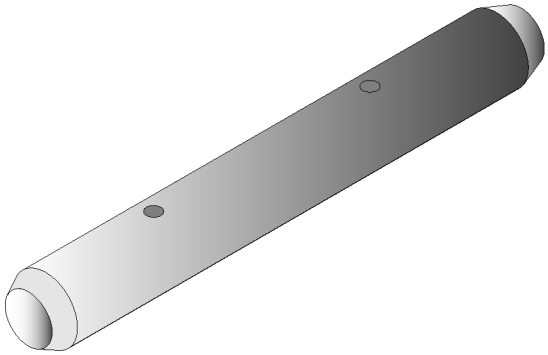

SHAFT - 6”FLOPPER

0131833 MTM

BASE - TANK FILLER, ALUM

0182768 MTM

BASE - TANK FILLER, STEEL

0150833 MTM

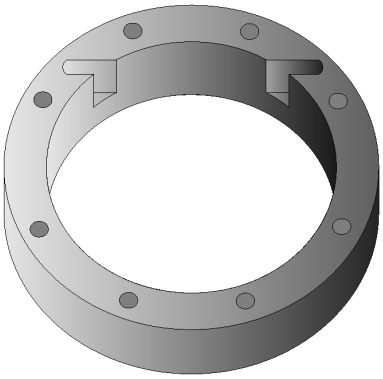

4”FLOPPER WELD BASE

0082388 MTM

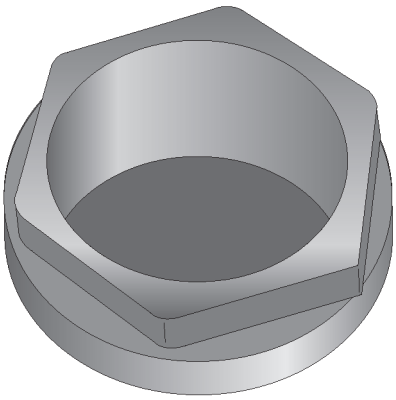

FLOPPER ASSY

0040200 MTM 602-02212-01 REX

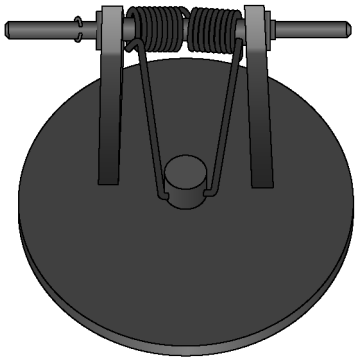

FLOPPER - ASSY, W/TOP GSKT, 6”

0131830 MTM

CASTING 6” FLOPPER

0131831 MTM

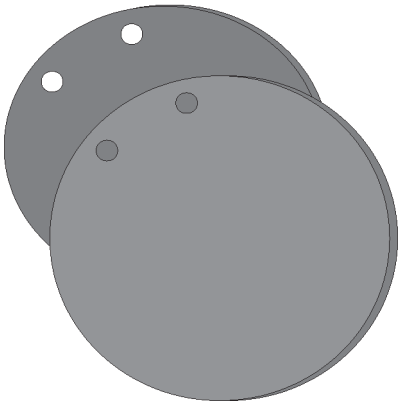

SEAL - FLOPPER, W/PLATE

0010011 MTM 5050650 REX

REX

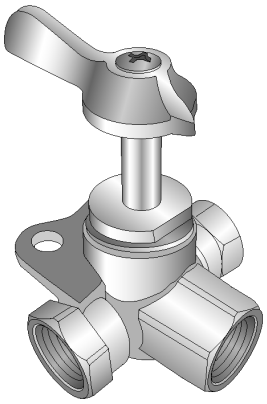

VALVE - AIR, 3-WAY

1113068 MTM 298-02086-56 REX

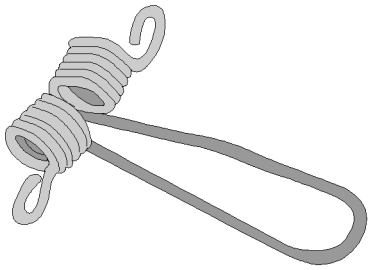

SPRING - FLOPPER

0010012 MTM 1070063 REX

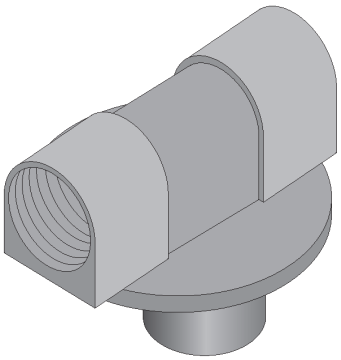

VALVE - SAFETY, AIR

0014966 MTM 1521140 REX

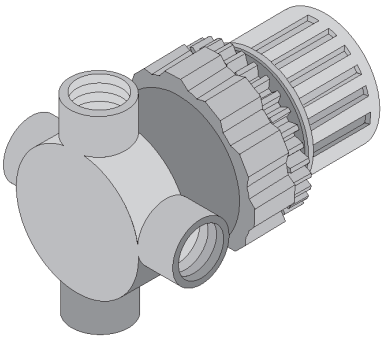

REGULATOR - AIR, .25", 0-60 PSI

0082403 MTM 1520987 REX

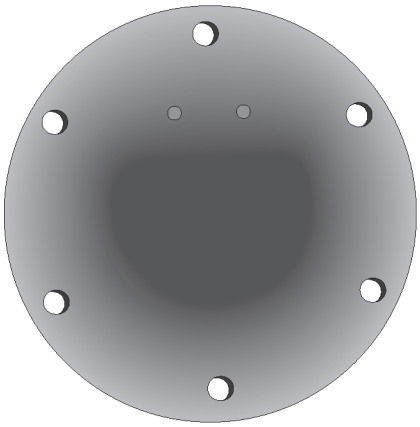

FLOPPER ASSY - BOLT DWN

1140420 MTM 602-11219-01 REX

Note: The whole assembly is 8 7/8" W & Flopper Seal is 5" W.

SMITH

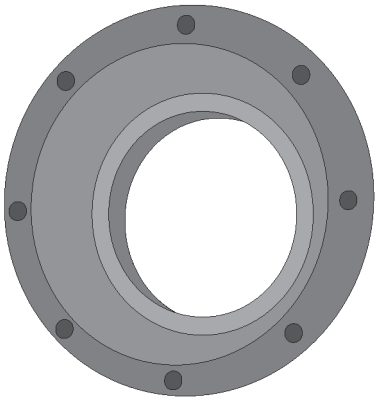

COVER - FLOPPER, FILLER 4"

0082394 MTM 483600 SMITH

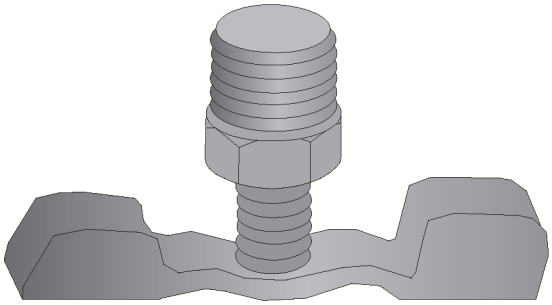

PETCOCK - 1/8" NPT

0201600 MTM 1570357 SMITH

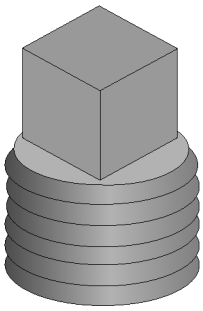

PLUG - PIPE, .375"

0015920 MTM 1573535 SMITH

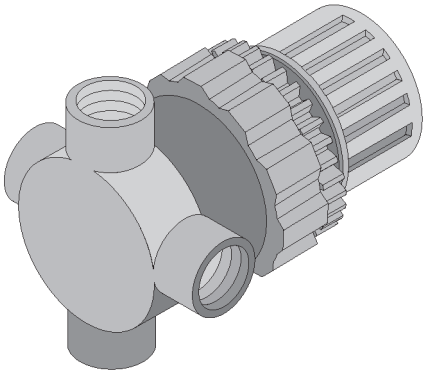

REGULATOR - AIR, .25", 0-60 PSI

0082403 MTM 1520987 SMITH

BALL VALVES

VALVE - BALL, STANDARD, 1/2"

0101306 MTM

VALVE - BALL, STANDARD, 3/4"

0082098 MTM

VALVE - BALL, STANDARD, 1"

0001008 MTM

VALVE - BALL, 1 1/4"

0082097 MTM

VALVE - BALL, STANDARD, 1 1/2"

0001001 MTM

VALVE - BALL, STANDARD, 2"

0001009 MTM

VALVE - BALL, SELF DRAIN, 1"

1168076 MTM

VALVE - BALL, DEADMAN, 1"

0108504 MTM

VALVE - BALL, DEADMAN, W/DRAIN, 1 1/4"

1182048 MTM

VALVE - BALL, DEADMAN, W/DRAIN, 1 1/2"

1182051 MTM

VALVE - BALL, DEADMAN, W/DRAIN, 2"

1181958 MTM

VALVE - BALL, DEADMAN, WO /DRAIN, 1 1/4"

1182049 MTM

VALVE - BALL, DEADMAN, W/O DRAIN, 1 1/2"

1182050 MTM

GATE VALVES

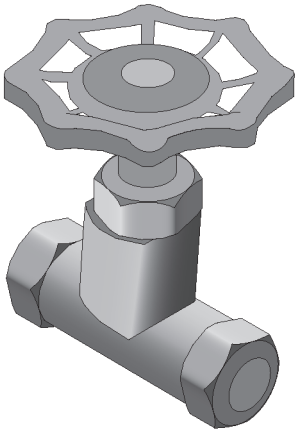

VALVE - GATE, 3/4”

0101293 MTM

VALVE - GATE, 1 1/4”

0101294 MTM

VALVE - GATE, 2” W/RED HANDLE

1230579 MTM

THIS PAGE INTENTIONALLY LEFT BLANK

Bearings, Bushings, Pins

ADVANCE / TEREX

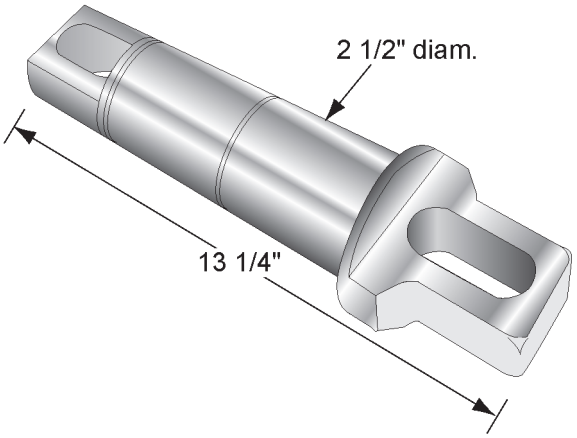

PIN - PIVOT TRAILER, W/GROOVE

1104299 MTM 40810 TEREX

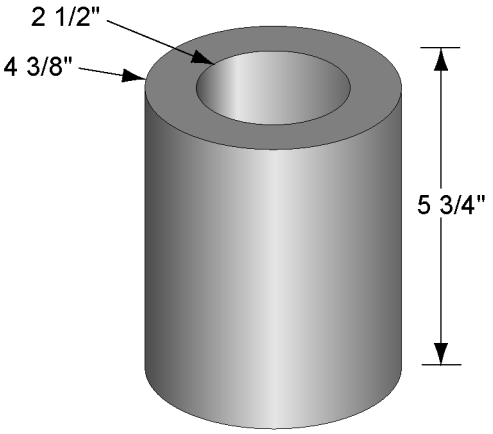

BUSHING - PIVOT, NYLATRON

1106937 MTM 13389 TEREX

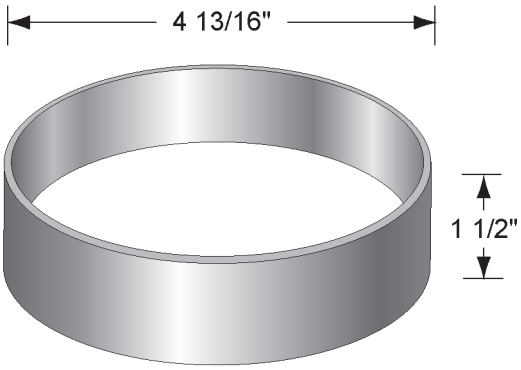

CHUTE PIVOT CUP - BEARING

0183112 MTM 40113 TEREX

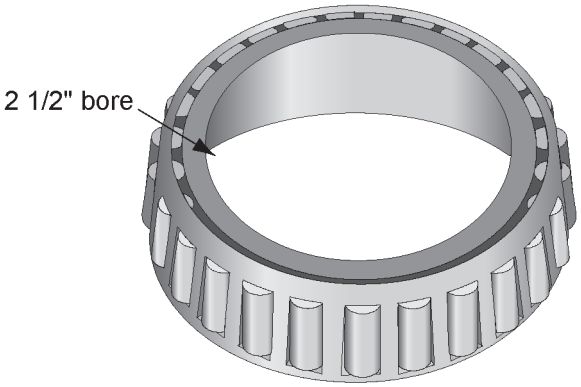

BEARING - CONE

0183111 MTM 40114 TEREX

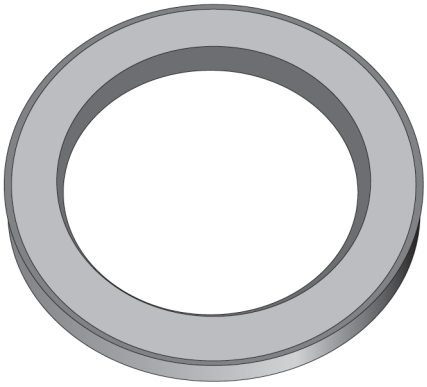

SEAL - OIL, BEARING PIVOT

0215252 MTM 40116 TEREX

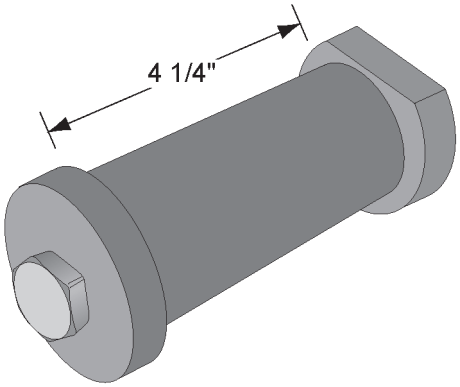

PIN - SPLIT, 2 1/4 X 4 1/4”

0085426 MTM 40201 TEREX

PIN - THUMB, 2 1/4” (OPTIONAL)

0085426 MTM

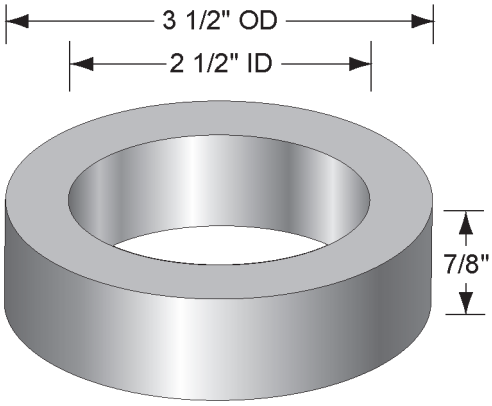

SPACER - PIVOT BOTTOM, BEARING TYPE

0152294 MTM 40150 TEREX

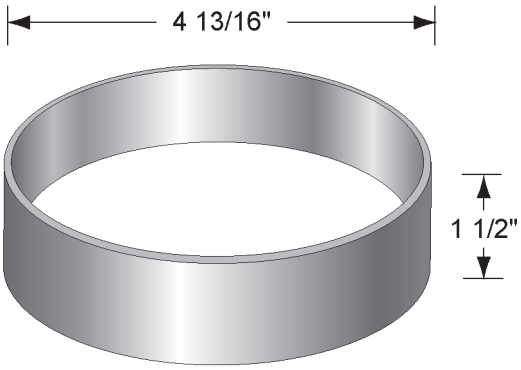

BEARING CUP - CHUTE PIVOT

0183112 MTM 80572118 CBMW

CBMW

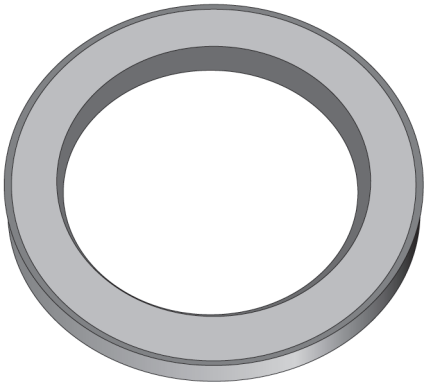

SEAL - OIL, BEARING PIVOT

0215252 MTM 80572116 CBMW

CCB

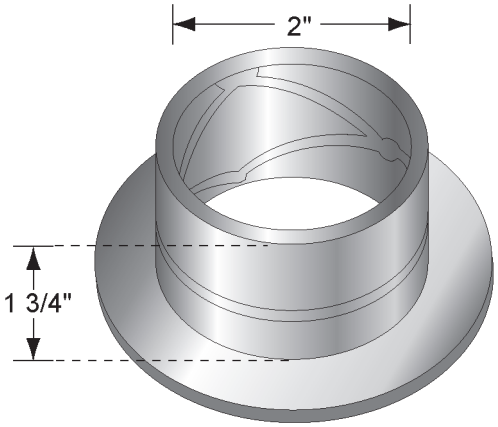

BUSHING - KINGPIN, BAL

0016477 MTM 1300470 CCB

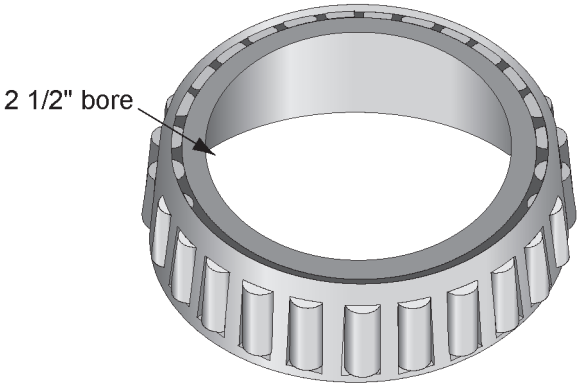

BEARING - CONE, CHUTE PIVOT

0183111 MTM 80572117 CBMW

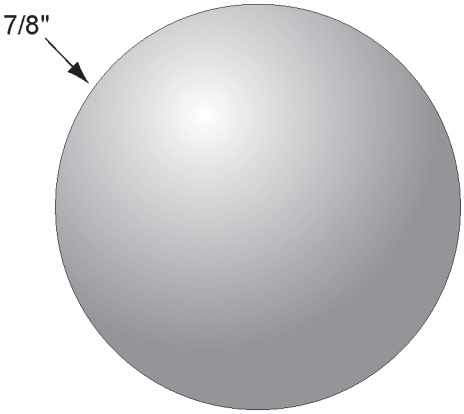

BALL - COLLECTOR CHUTE

0016090 MTM 1300198 CCB

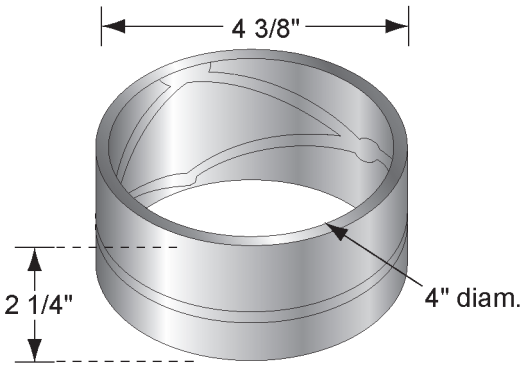

BUSHING - MOUNTING, PEDESTAL

0015371 MTM 5029322 CCB

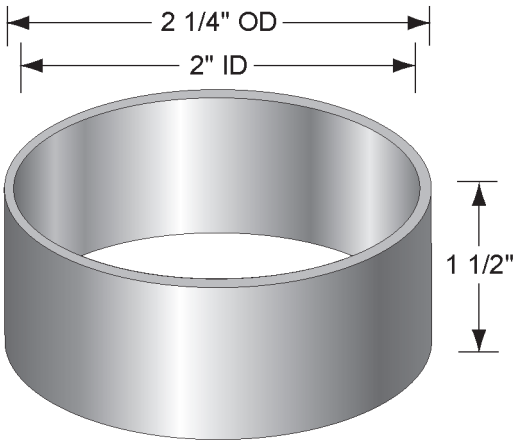

BUSHING - MOUNTING, PEDESTAL

0014156 MTM 5028354 CCB

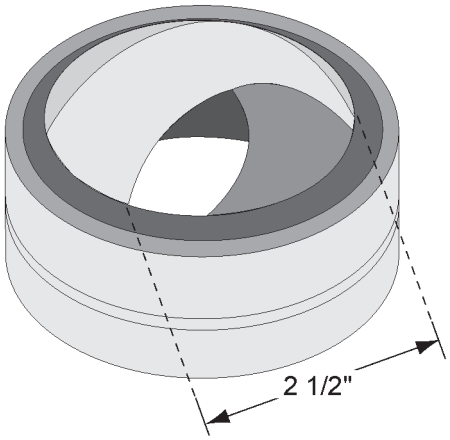

BUSHING - BALL, TRAILER BAL

0085447 MTM 1300553 CCB

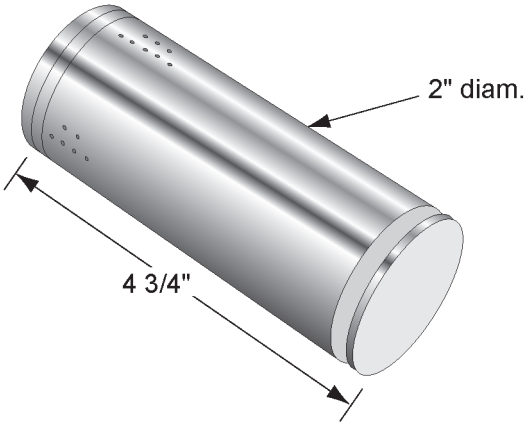

PIN - CYLINDER, CHA BAL

0016412 MTM 5021637 CCB

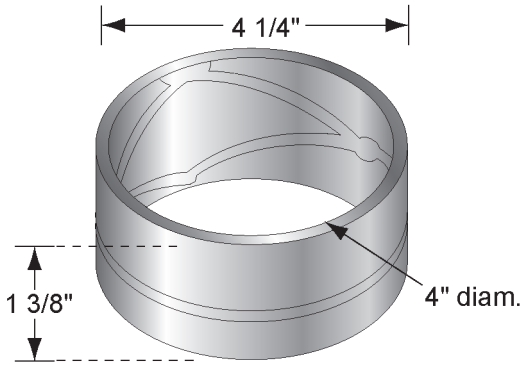

BUSHING - MOUNTING, PEDESTAL

0016209 MTM 5029319 CCB

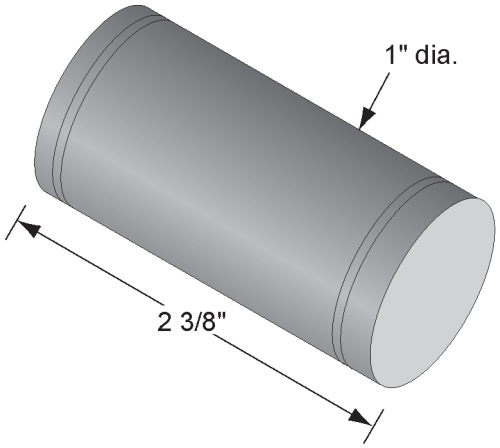

PIN - HOOK, LATCH, CHA BAL

0016458 MTM 5050879 CCB

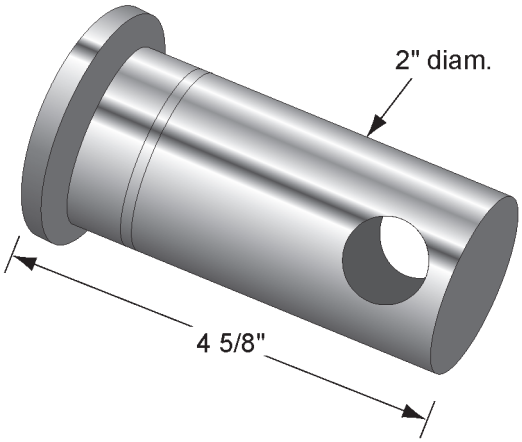

PIN - MOUNTING, PEDESTAL

0014467 MTM 5028526 CCB

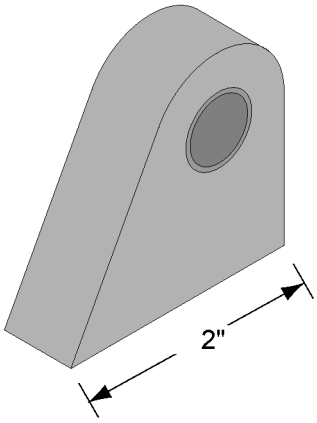

LUG - 2”

0015356 MTM 5024898 CCB

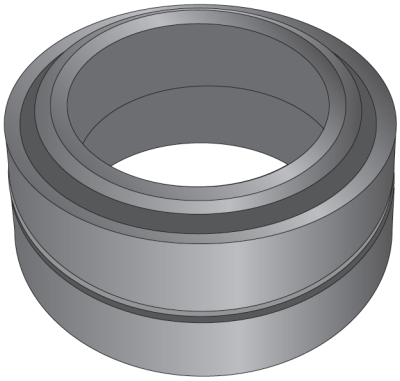

BEARING - SPHERE, BAL, CHA, 2 1/4”

0016092 MTM 1300326 CCB

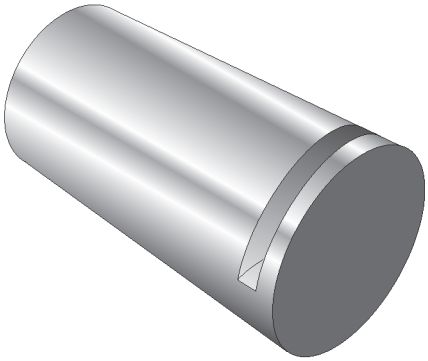

PIN - PIVOT TRAILER

0015366 MTM 5027774 CCB

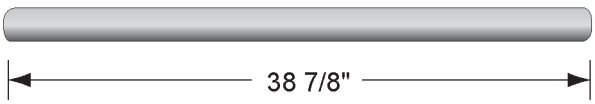

SHAFT - TRAILER, CHA BAL

0016446 MTM 5023503 CCB

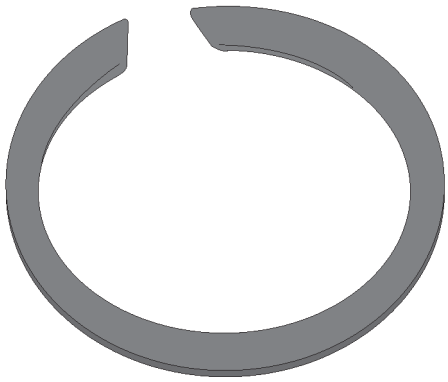

RING - RETAINING

0014770 MTM 1050397 CCB

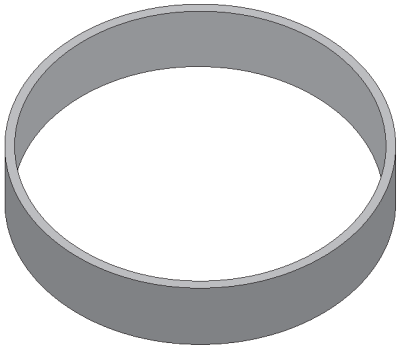

BUSHING # NZ-1765-M

0014466 MTM 5028371 CCB

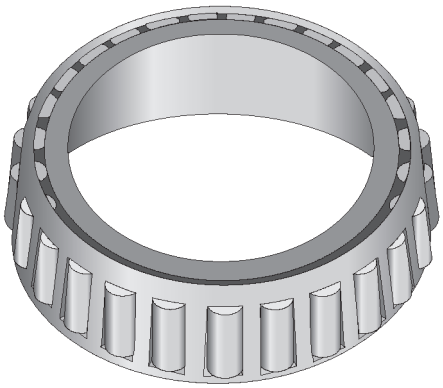

CONE - BEARING, AXLE, TIM #5760

0015242 MTM 1300168 CCB

CONE - BEARING, AXLE, FABCO

0016084 MTM 1300472 CCB

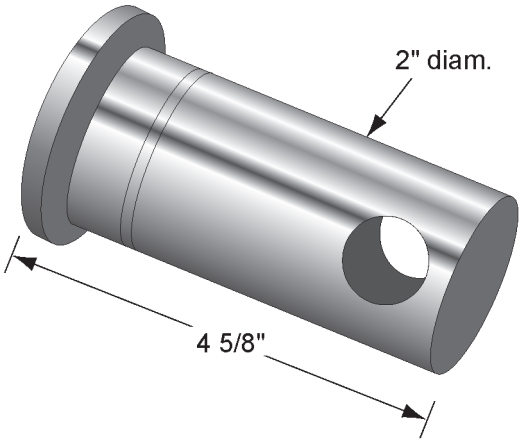

PIN - PIVOT, CHA

0014467 MTM 5028526 CCB

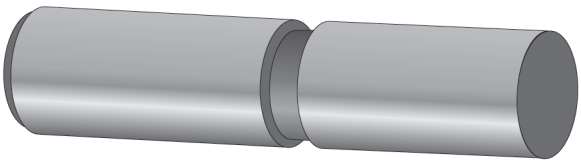

PIN - KING, CHA BAL, N/S, 9 3/4"

0016449 MTM 5024281 CCB

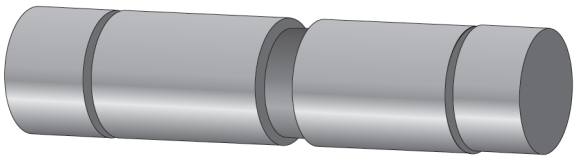

PIN - KING, LONG, OS CHA BAL

0016394 MTM 5023438 CCB

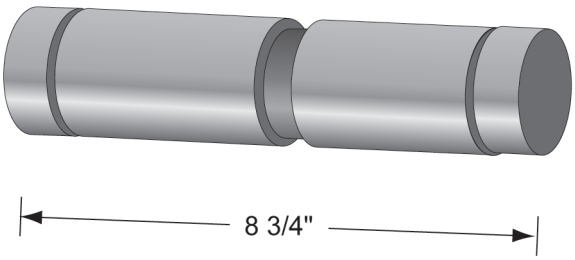

PIN - KING, CHA BAL, N/S, 8"

0016448 MTM 5024181 CCB

KIMBLE

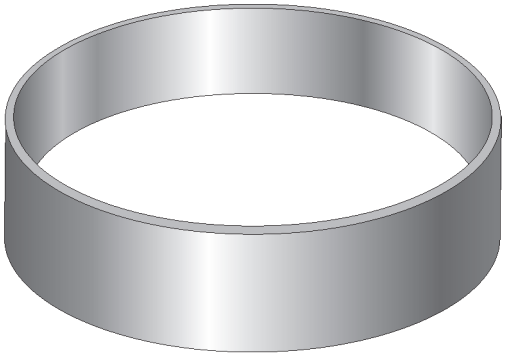

CUP - BEARING, AXLE, TIM #5735

0015273 MTM 1300473 CCB

CUP - BEARING, AXLE, FABCO

0016085 MTM 1300471 CCB

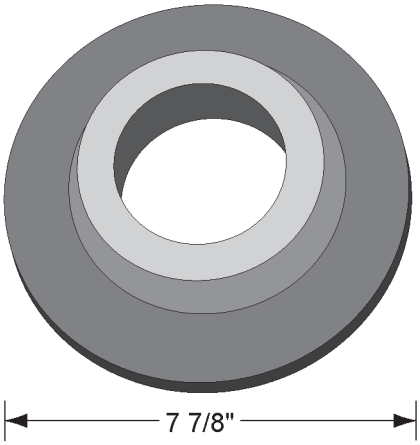

HUB - 3" CENTER ID, 7 7/8" OD, CHAL

0012434 MTM 5028025 CCB

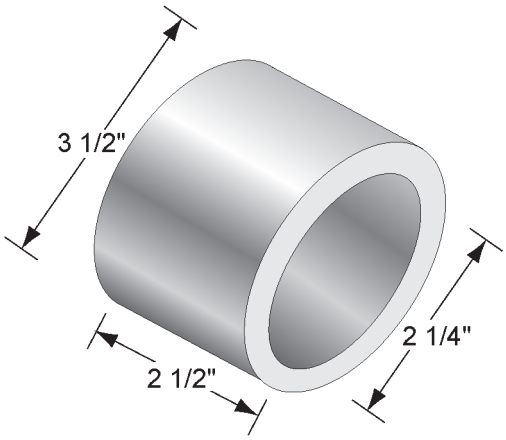

BOSS - OUTER, 2" ID

0016295 MTM 5023479 CCB

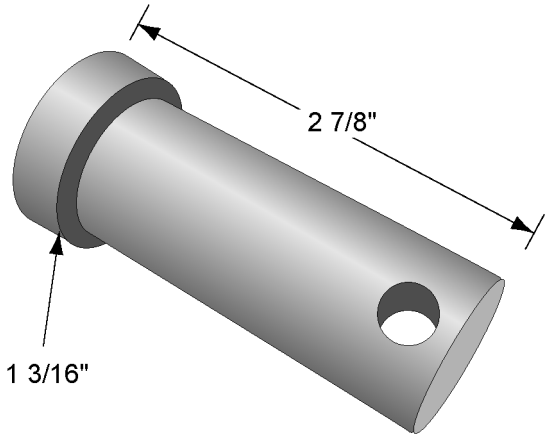

PIN - CLEVIS, 1" X 2 1/2"

1168636 MTM C64-98250-00 KIMBLE

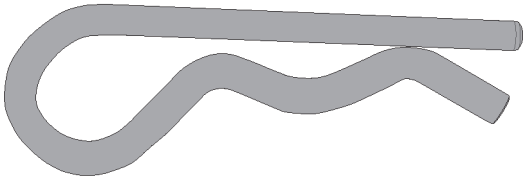

CLIP - PIN, HITCH

1332460 MTM C61-25004-00 KIMBLE

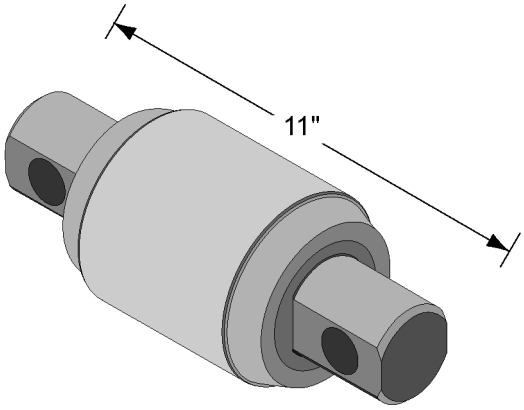

BUSHING - ATRO URETHANE

0183488 MTM C96-34375-03 KIMBLE

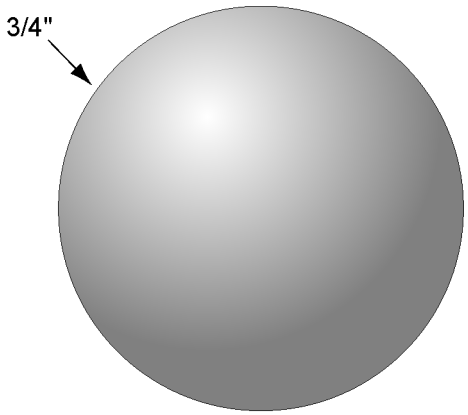

BALL - BRG, .75 CHR STL, G25, 150PC

1555147 MTM 11413-03692 KIMBLE

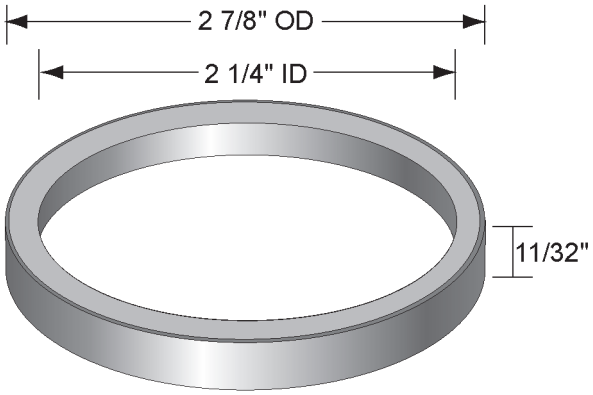

BUSHING - AXLE

1430222 MTM MA-38267 LONDON

LONDON

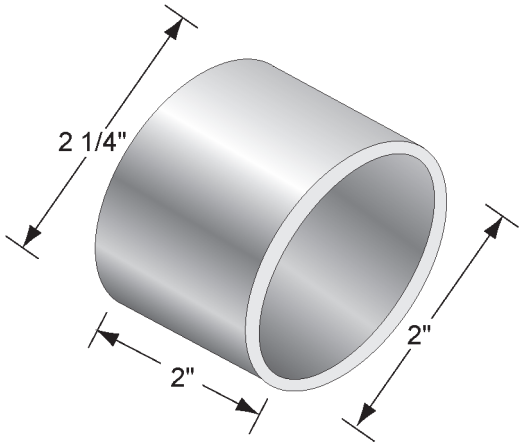

BEARING - AXLE

1430237 MTM MA-39915 LONDON

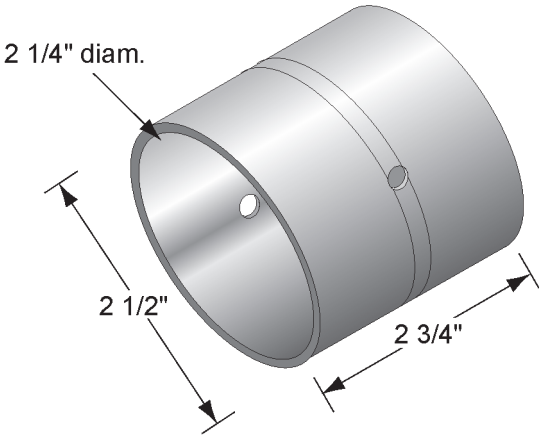

BUSHING - KINGPIN, AXLE

1255699 MTM 700041 LONDON

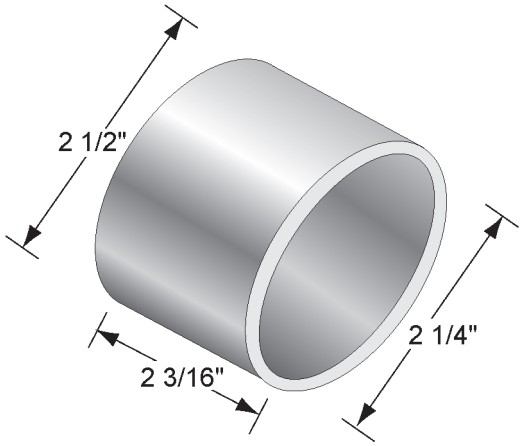

BEARING - AXLE

1430238 MTM MA-38816 LONDON

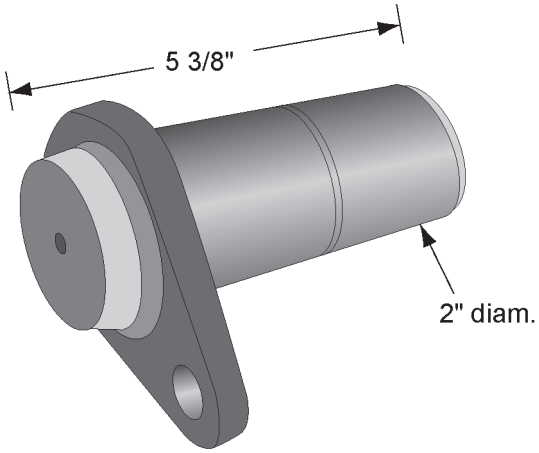

PIN - CYLINDER, AXLE

1255568 MTM MB-37313 LONDON

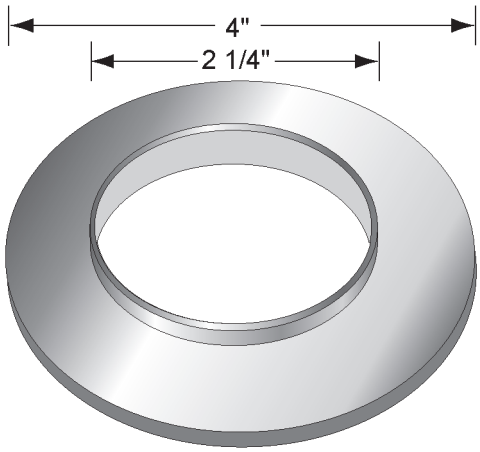

BEARING - THRUST, AXLE

1255700 MTM 700068 LONDON

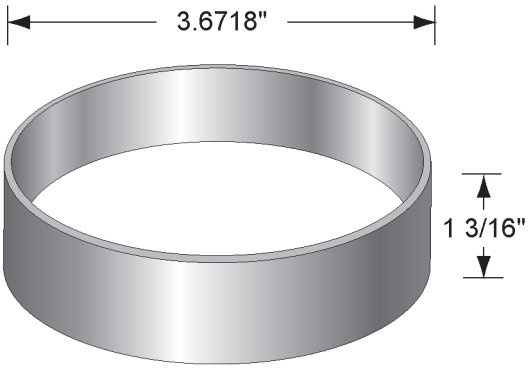

CUP - BEARING, CHUTE PIVOT

0183114 MTM

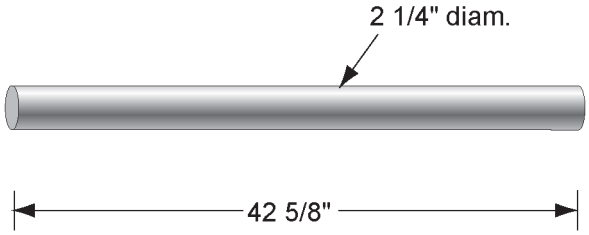

PIN- AXLE

1255585 MTM MB-38269 LONDON

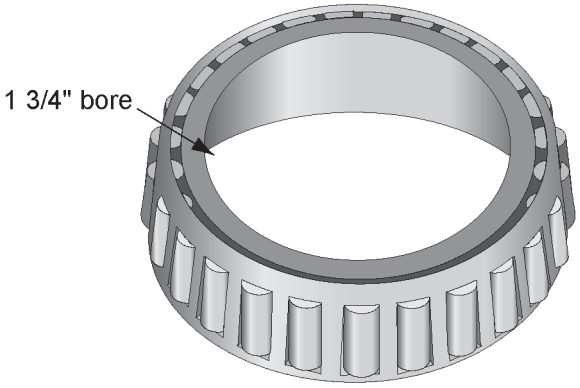

CONE - BEARING, CHUTE PIVOT

0183113 MTM

MTM

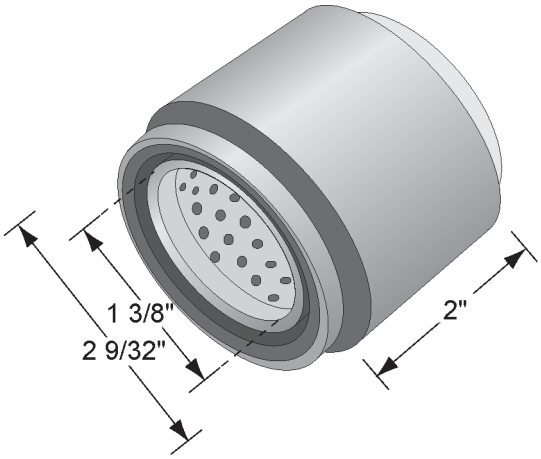

BUSHING - PIVOT, AXLE ARM

1100490 MTM

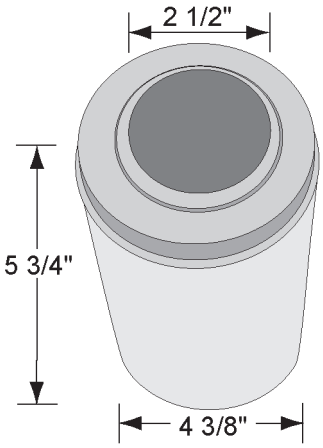

BUSHING - PIVOT, AXLE, HEND.

1106937 MTM

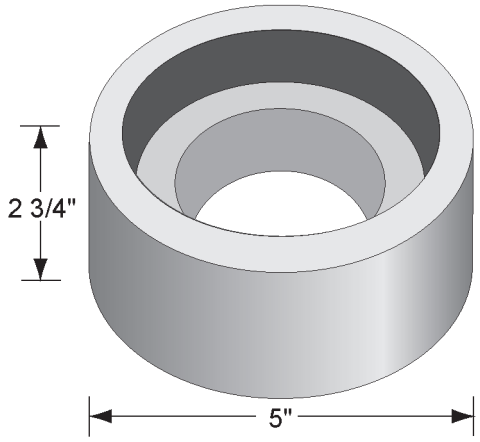

RING - PIVOT CENTER, AXLE

0182113 MTM

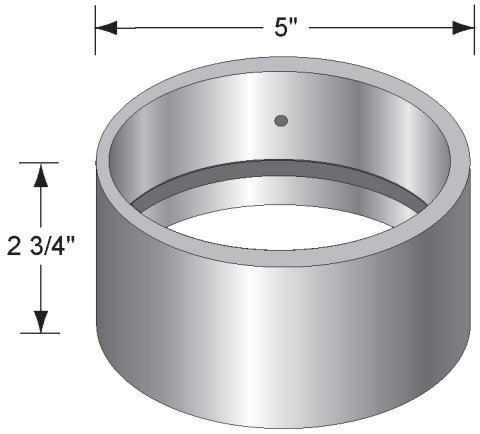

BEARING - PIVOT PIN, AXLE

0085443 MTM

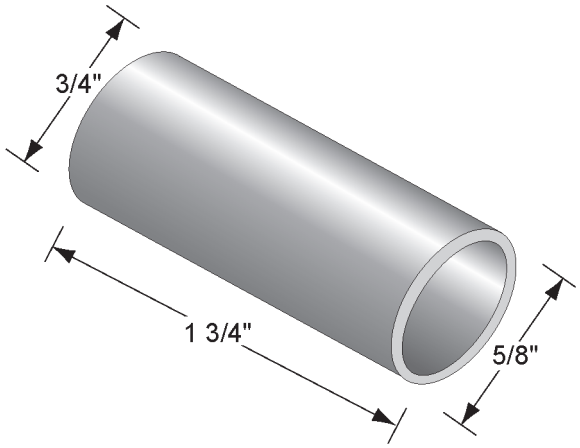

BUSHING - SHOCK ABSORBER, AXLE

0183129 MTM

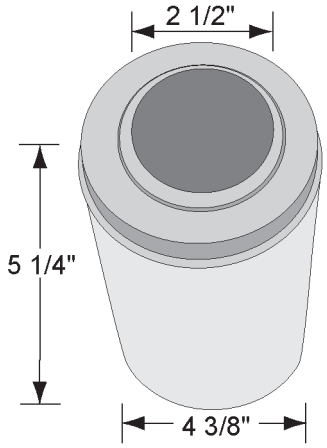

BUSHING - TRAILER TORQUE, AXLE

0115092 MTM

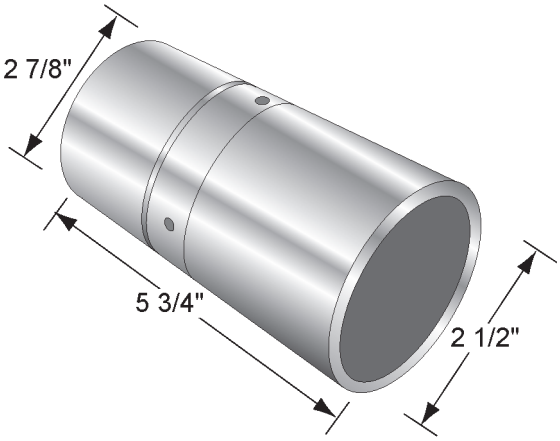

SLEEVE - WEAR, AXLE

0184287 MTM

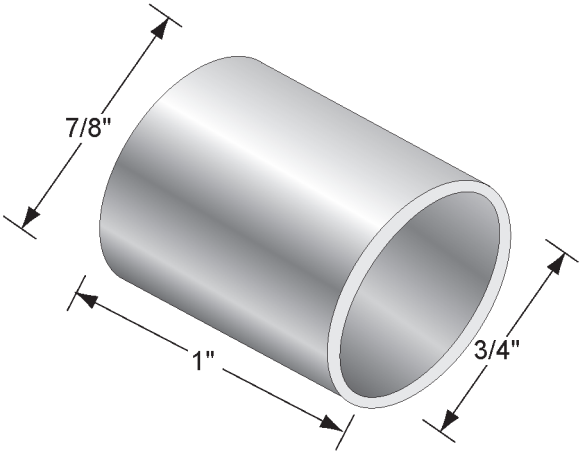

BUSHING - MAIN CHUTE

0153784 MTM

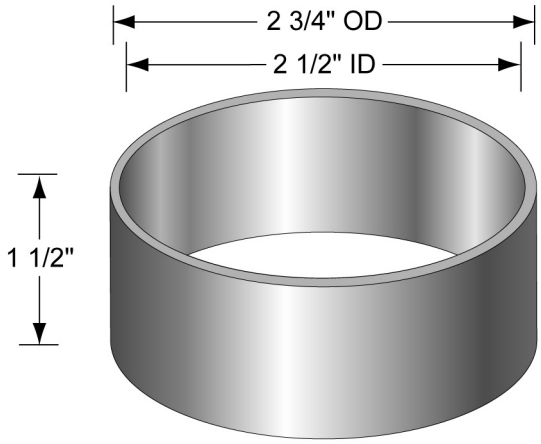

BUSHING - CHUTE PIVOT

0115089 MTM

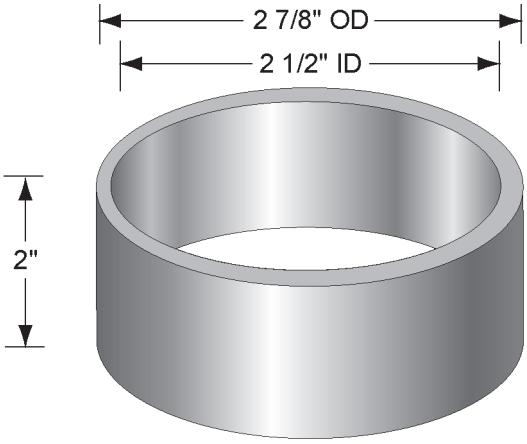

BUSHING - PIVOT, O/S

0082256 MTM

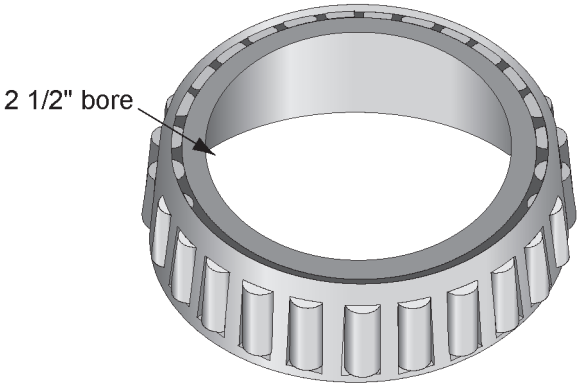

BEARING - CONE, CHUTE PIVOT

0183111 MTM

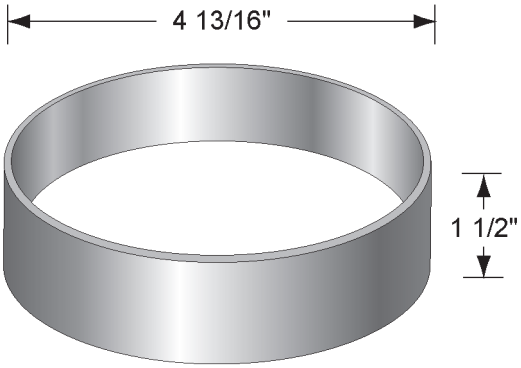

BEARING - CUP, CHUTE PIVOT

0183112 MTM

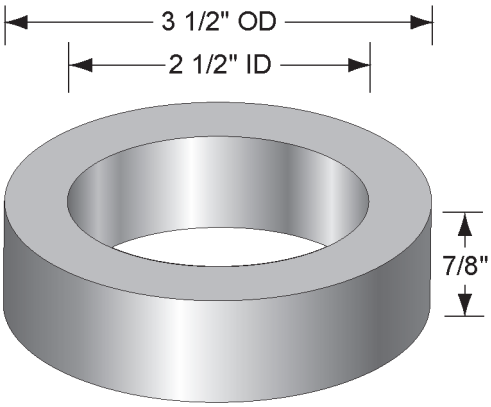

SPACER - BEARING, CHUTE PIVOT

0152294 MTM

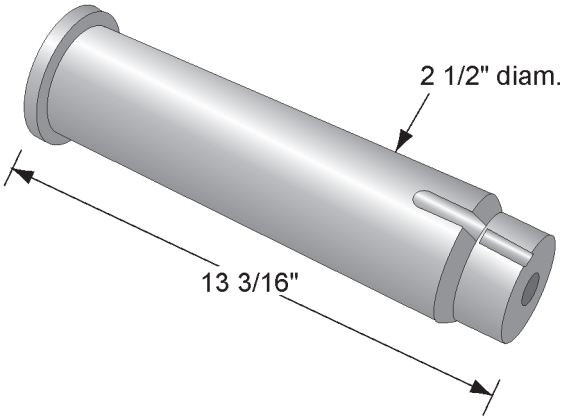

PIN - PIVOT, TAW ARM KNUCKLE

0184299 MTM

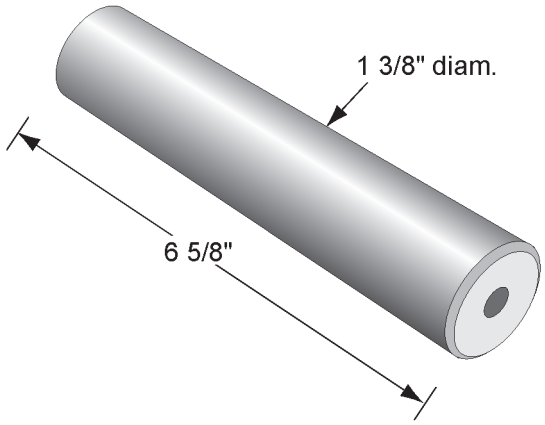

PIN - PIVOT, CONTROL ARM

0189069 MTM

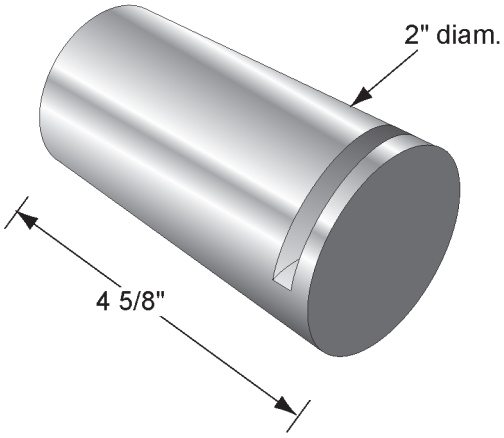

PIN - SLOTTED, TAW ARM

0183808 MTM

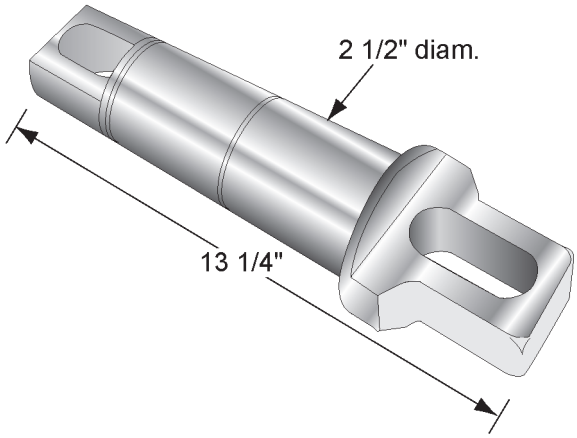

PIN - PIVOT, AXLE, BMV

1104299 MTM

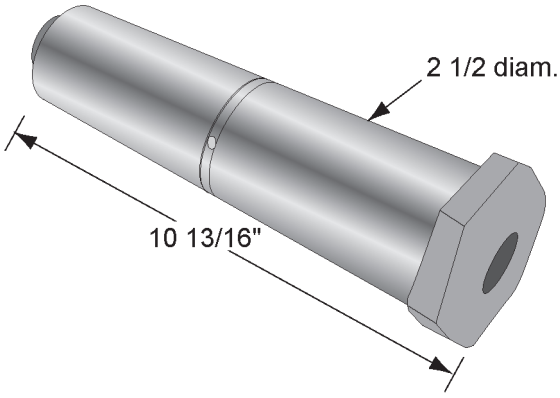

PIN - PIVOT, HEX HEAD, AXLE, BMIII

0182107 MTM

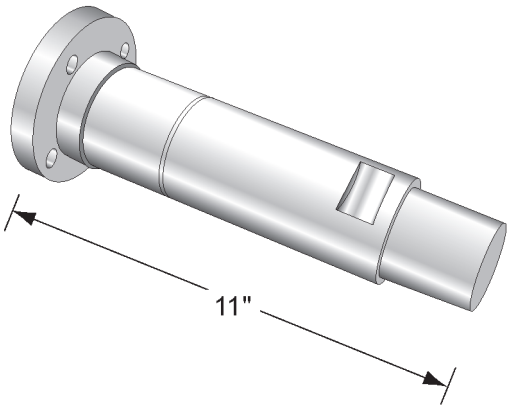

PIN - PIVOT, ROUND HEAD, AXLE, BMIII

0183146 MTM

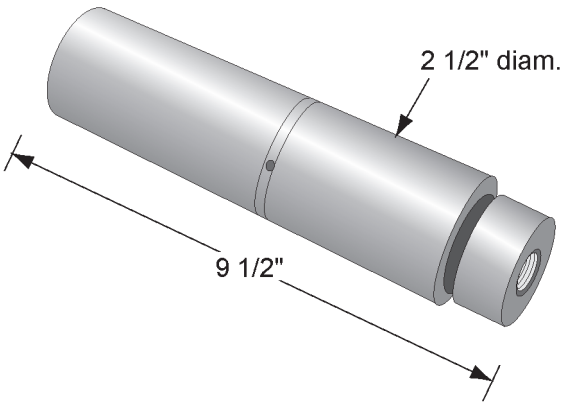

PIN - MAIN, TAW

0184755 MTM

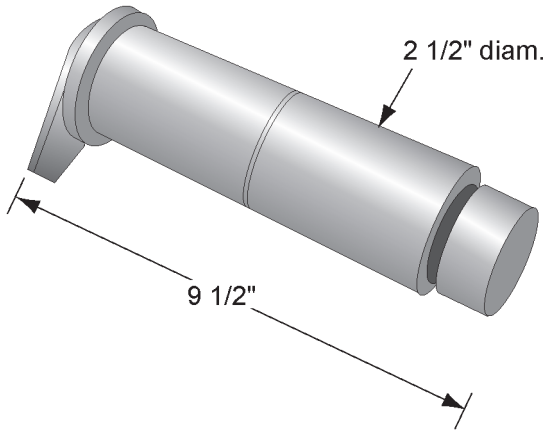

PIN - PUSH, CASTERING

0187055 MTM

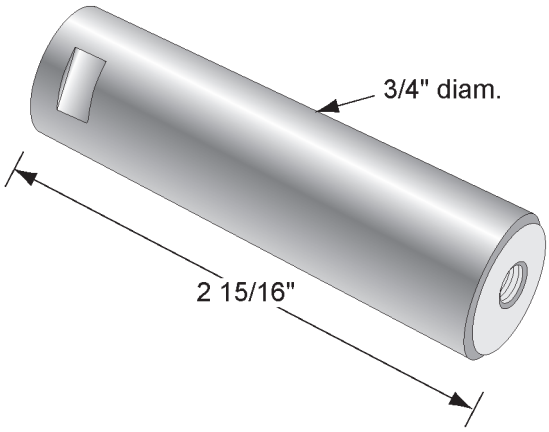

PIN - MOUNT, SECONDARY CYLINDER TAW

0184444 MTM

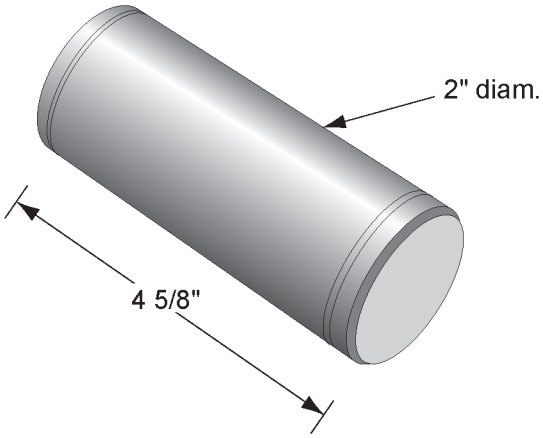

PIN - MOUNTING, CYLINDER, BM/TAW

0085435 MTM

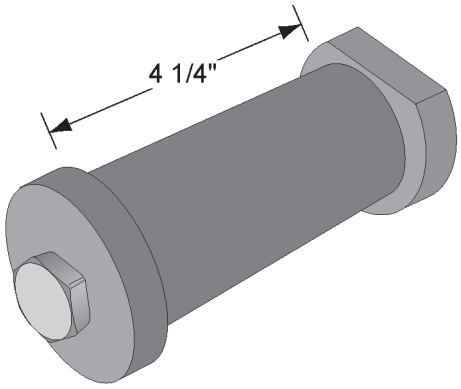

PIN - THUMB, AXLE CYLINDER, BM, 2 1/4”

0085426 MTM

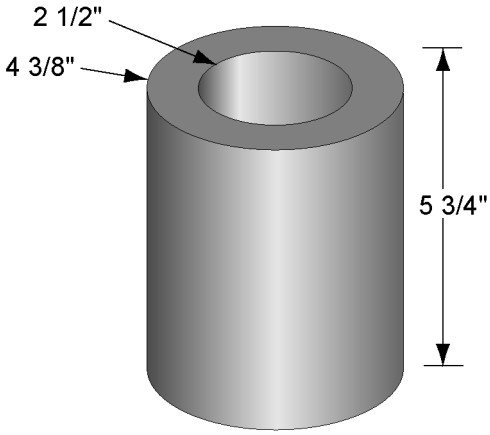

BUSHING - PIVOT, BMV, NYLATRON

1106937 MTM

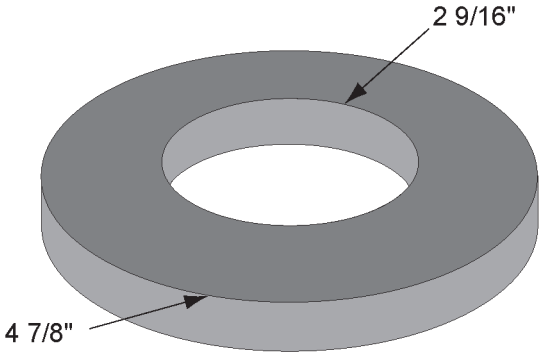

WASHER - MAIN PIVOT, 4 7/8” OD

0189076 MTM

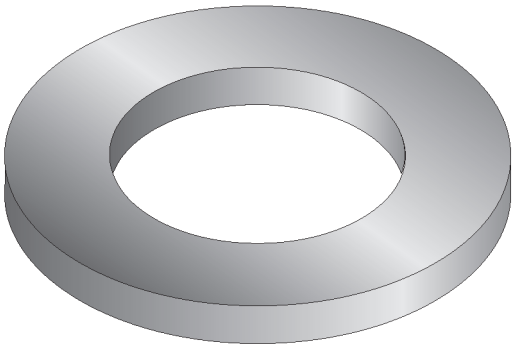

WASHER - MAIN PIVOT, 4 7/8" OD, 2 1/2" ID

1104300 MTM

No Image Available

PIN - THUMB, 2" BM AXLE CYLINDER

0085427 MTM

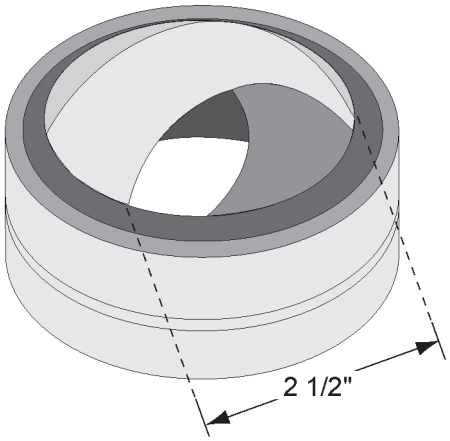

BEARING - PIVOT, BM TRAILER, 2 1/2"

0085447 MTM

No Image Available

RING - SNAP, EXTERNAL, 2.5

1105284 MTM

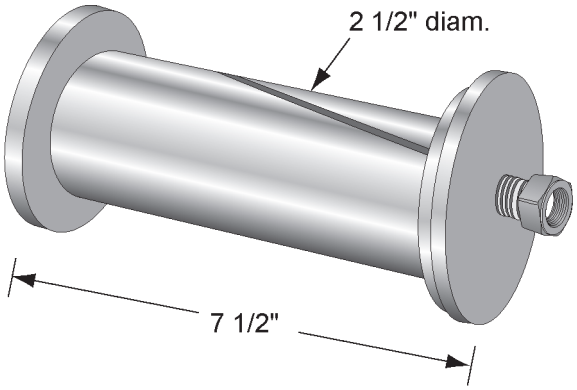

PIN - PIVOT, TRAILER, BMII/BMIII

0085442 MTM

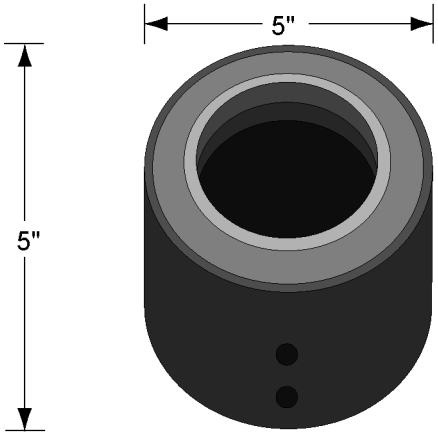

PIN - PIVOT, SOCKET

0085441 MTM

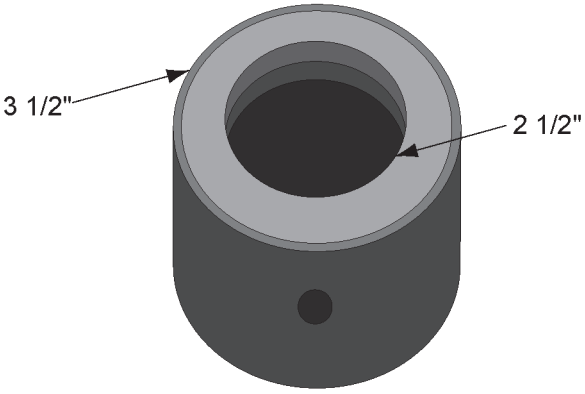

RING - KEEPER, PIVOT PIN

0182114 MTM

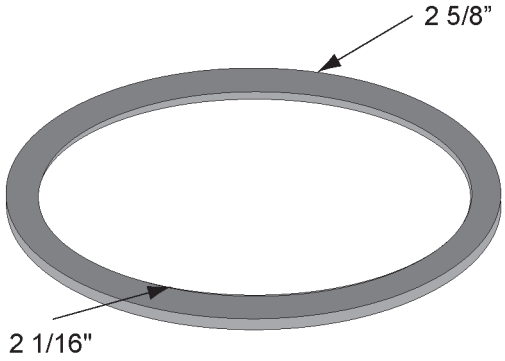

WASHER - THRUST, 2.63” OD X 2” ID

1101462 MTM

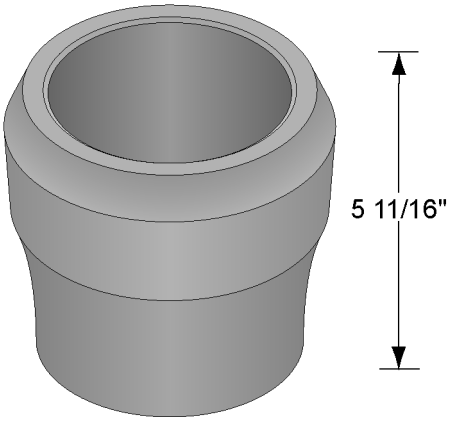

PIVOT - HUB, CENTER TYPE, MAC CASTING

0182109 MTM

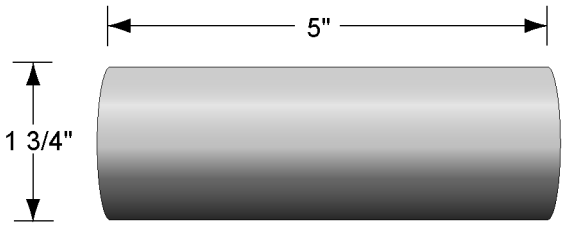

PIN - LATCH, BMIII

0183825 MTM

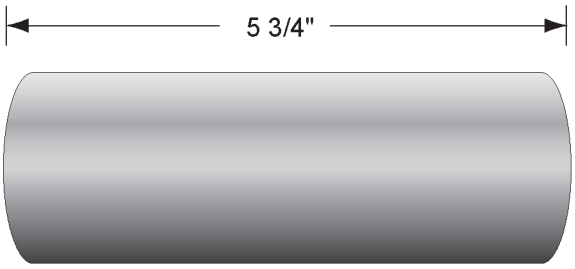

PIN - LATCH, BMV

0189036 MTM

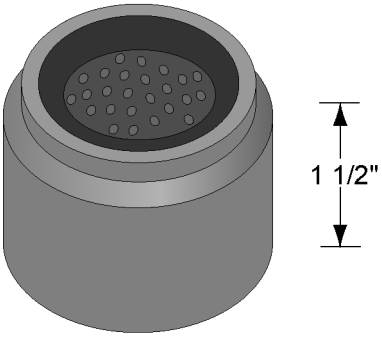

BUSHING - CYLINDER, URETHANE

1100490 MTM

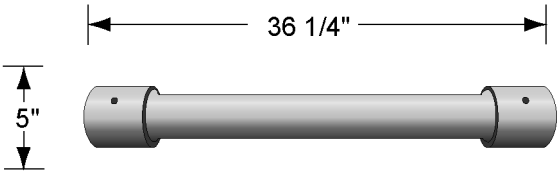

TUBE - CROSS, W/SOCKETS, BM

0085449 MTM

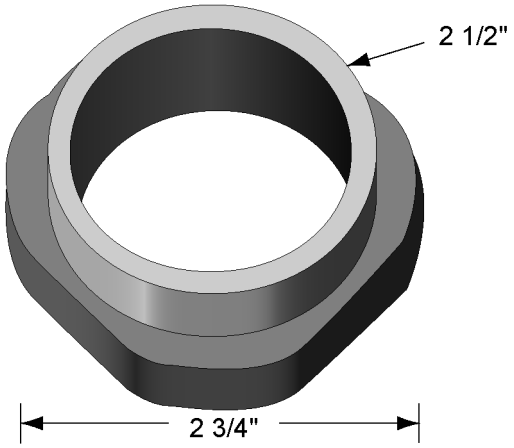

CAP - END, TAPERED

0183096 MTM

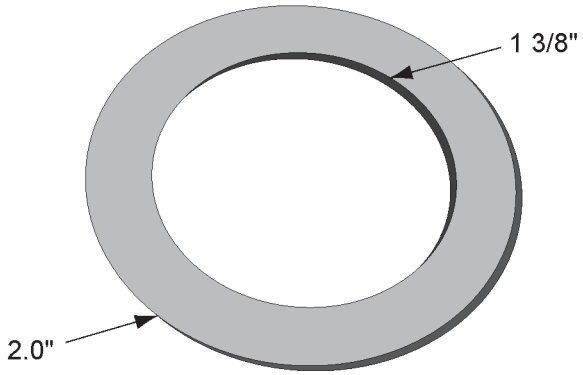

WASHER - THRUST

0183098 MTM

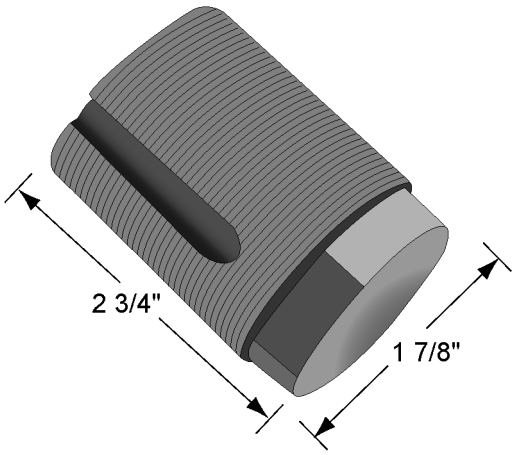

STEM - ADJUSTING

0183097 MTM

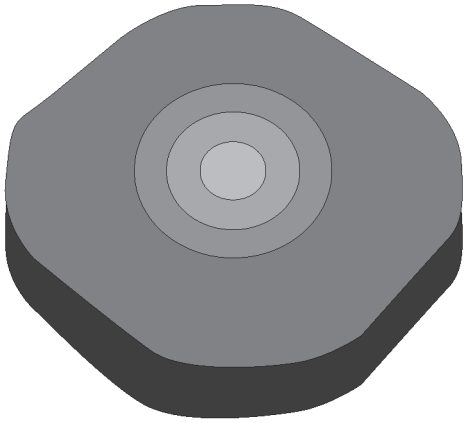

CAP - KING PIN, MTM

0183064 MTM

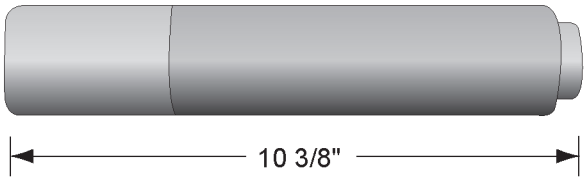

PIN - KING PIN, O/S TAPERED

0183066 MTM

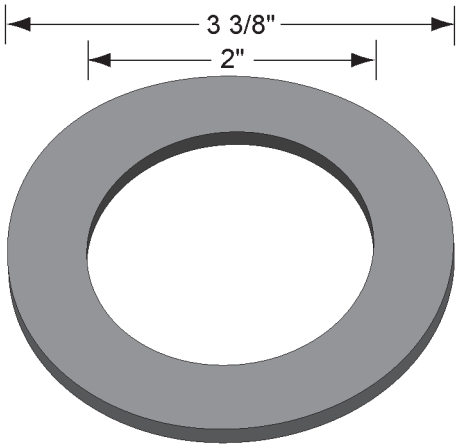

WASHER - KING PIN, LARGE

0183068 MTM

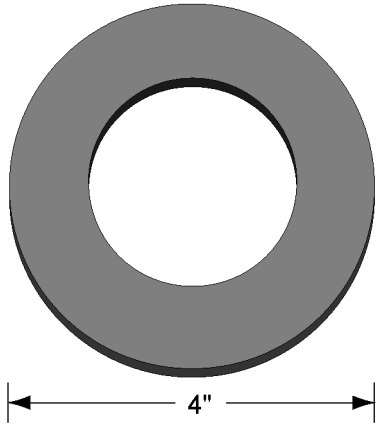

WASHER - MAIN PIN, TAW

0184756 MTM

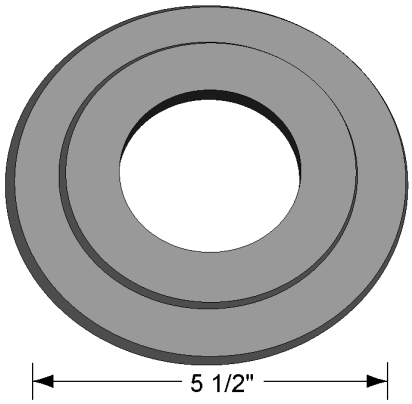

WASHER - CENTER TYPE PIN

0182112 MTM

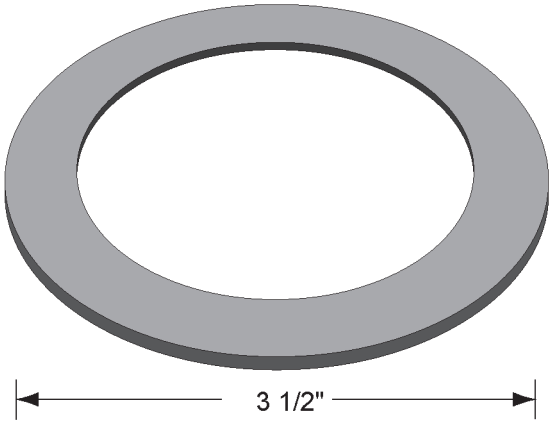

RING - SPACER, CYLINDER MOUNT

0189072 MTM

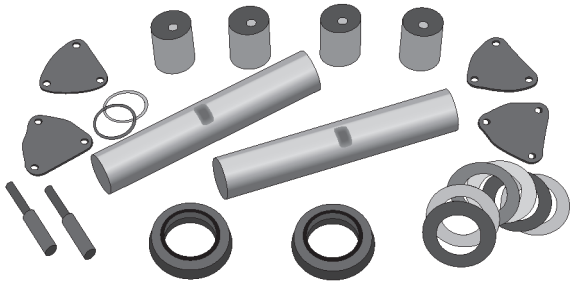

KING PIN KIT (BOLT ON CAP)

1170859 MTM

KING PIN KIT (SCREW ON STYLE)

1170860 MTM

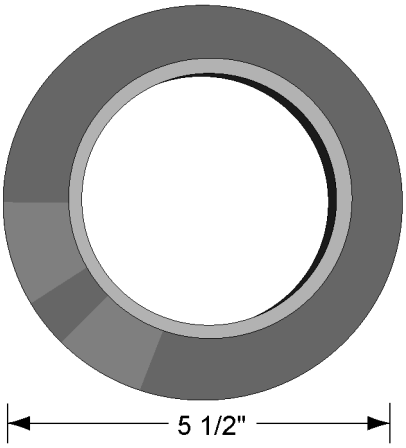

WASHER - PIVOT TYPE, TAPER

0187051 MTM

REX

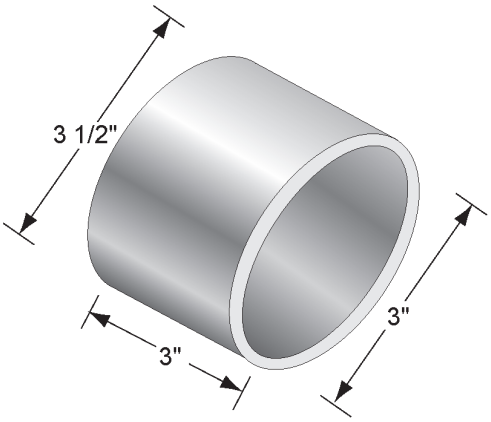

BUSHING - PIVOT, MAIN, BRONZE

1140231 MTM 102-12706-01 REX

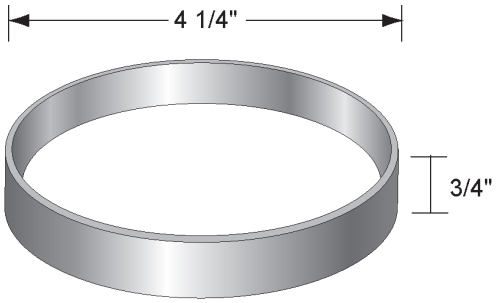

BUSHING - DURALON, CHUTE PIVOT

1112640 MTM 102-10296-01 REX

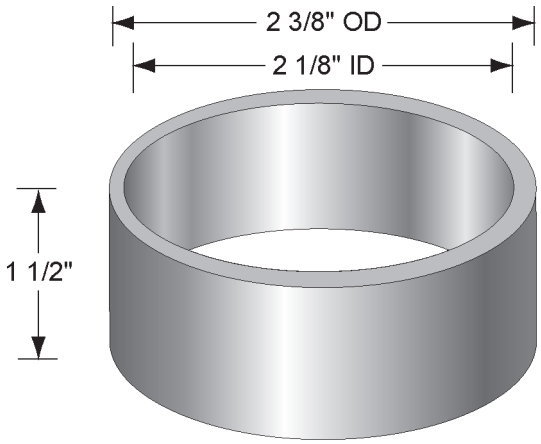

BUSHING - TRAILOR PIVOT, REX

1112667 MTM 102-09495-01 REX

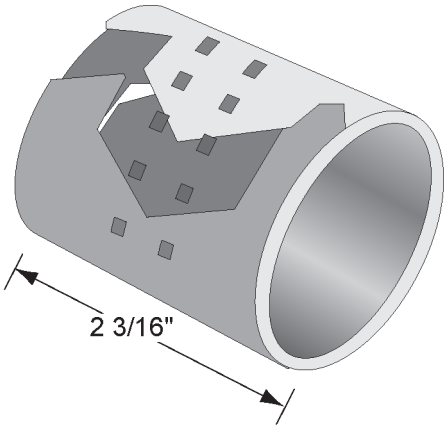

BUSHING - KING PIN, AXLE

1132523 MTM 102-10036-13 REX

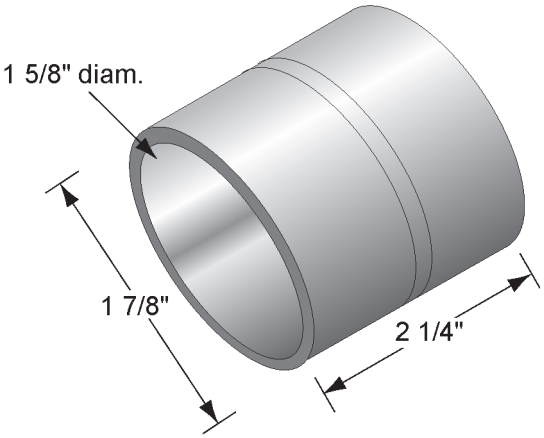

BUSHING - KING PIN, AXLE

1113062 MTM 102-12701-01 REX

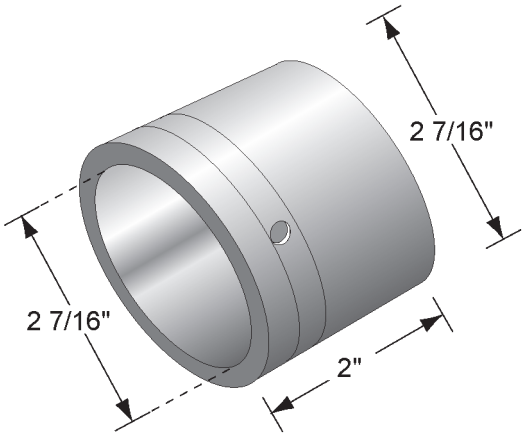

BUSHING - PIVOT, CHUTE, MKIII

1112726 MTM 102-07060-01 REX

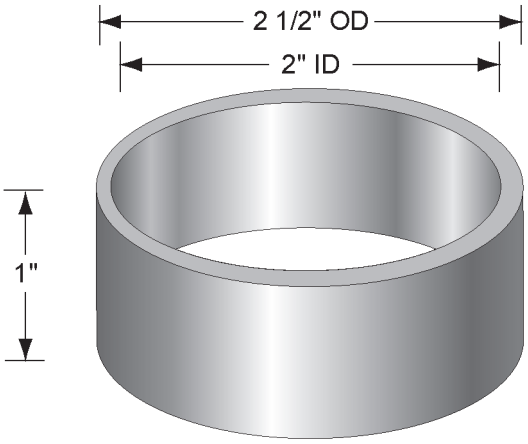

BUSHING - CARRIAGE, LM

1112774 MTM 102-09568-01 REX

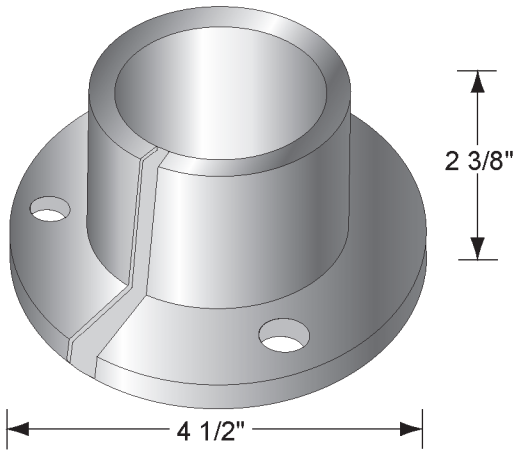

RING - EXPANSION, PIVOT

1140069 MTM 102-30402-01 REX

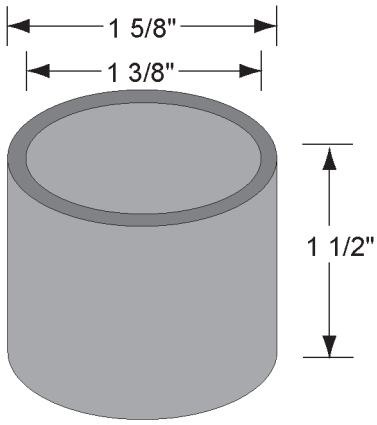

BUSHING - LATCH HOOK, LM

1113040 MTM 298-00400-02 REX

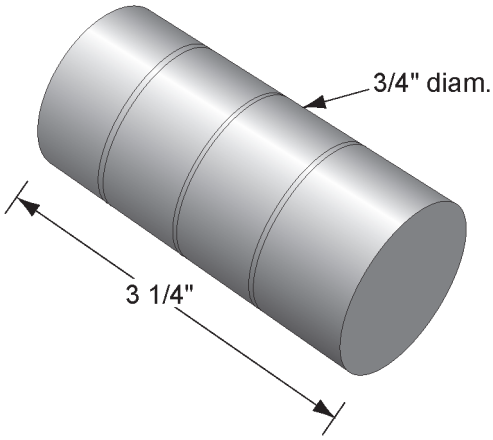

PIN - CHUTE BRAKE

1112968 MTM 102-12727-01 REX

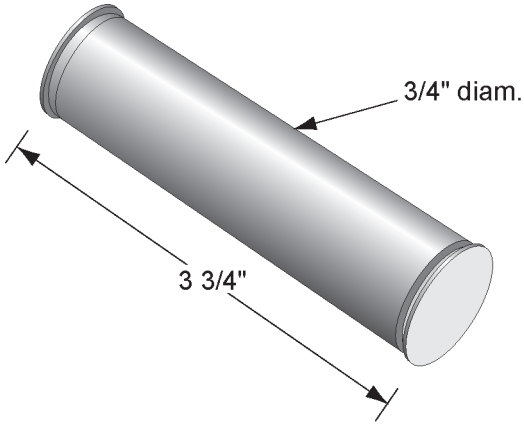

PIN - CHUTE CYLINDER

1143994 MTM 102-12709-01 REX

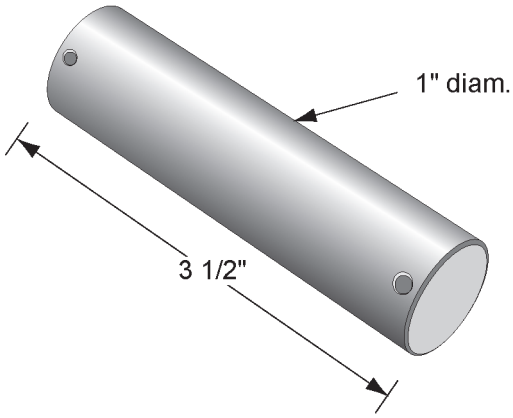

PIN - CHUTE TEE

1112863 MTM 102-09520-01 REX

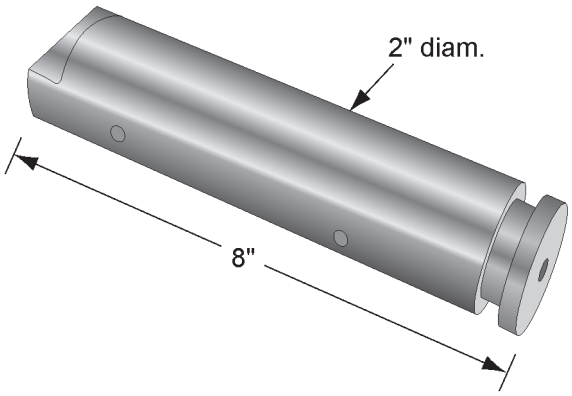

PIN - CYLINDER, BOOSTER

1144713 MTM 102-30413-01 REX

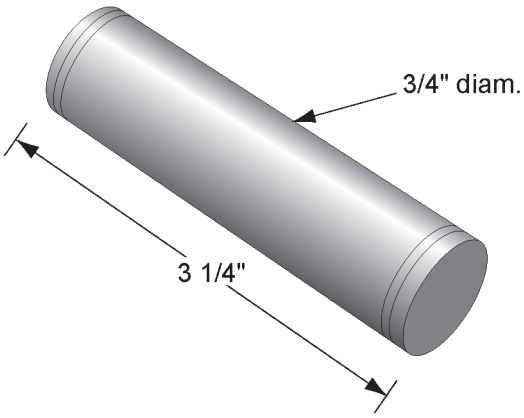

PIN - CHUTE PIVOT, PHIII

1113015 MTM 102-10300-01 REX

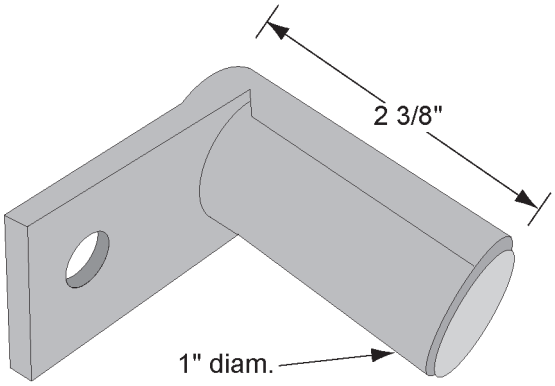

PIN - CHUTE, BM MAIN

0085605 MTM 502-08479-80 REX

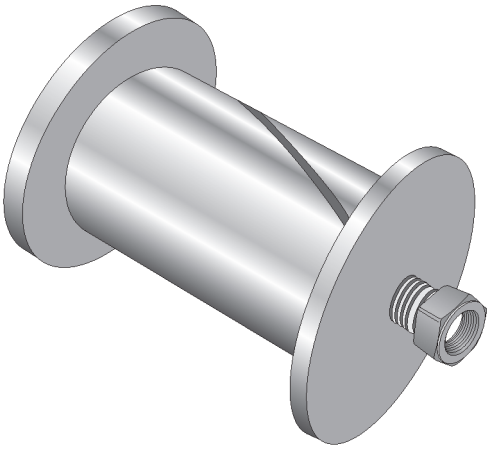

PIN - CARRIAGE

1137247 MTM 102-12860-01 REX

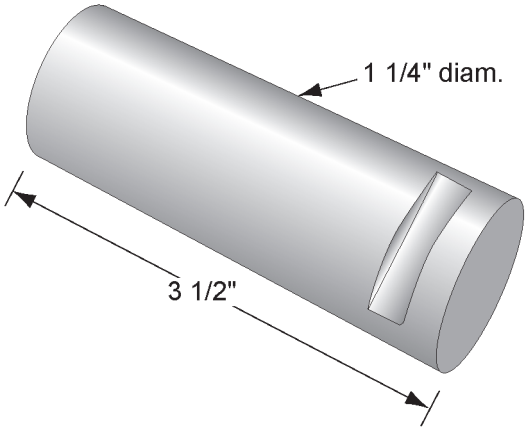

PIN - CARRIAGE HOOK

1113067 MTM 102-12712-01 REX

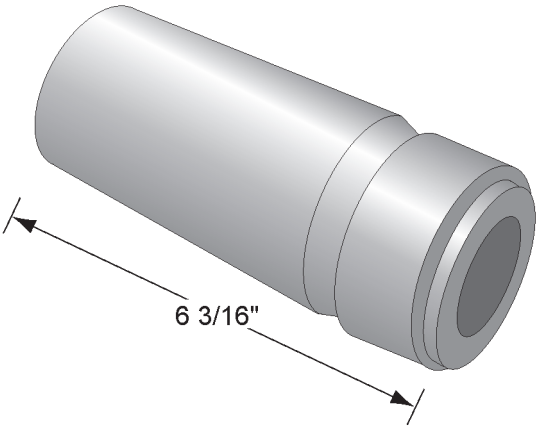

PIN - LATCH, BOOSTER

1137691 MTM 502-30111-80 REX

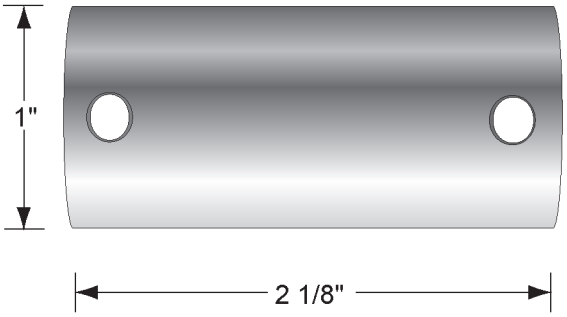

PIN - MAIN CHUTE

1112969 MTM 102-10234-02 REX

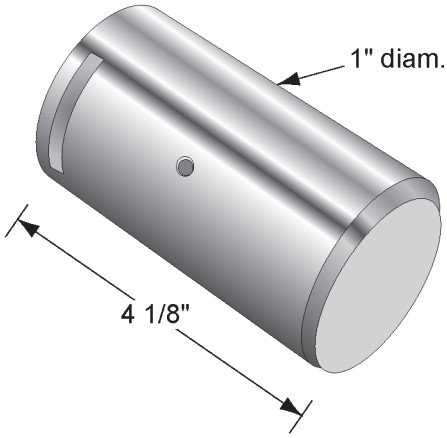

PIN - PEDESTAL FRAME

1110683 MTM 102-12806-01 REX

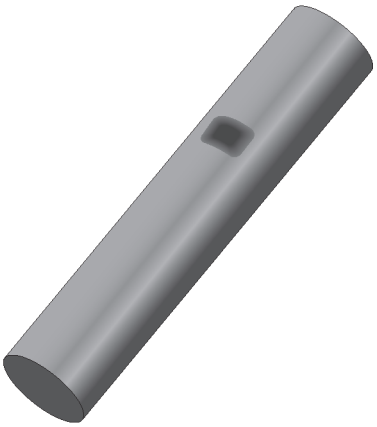

PIN - KING, REX, LM

1112723 MTM 102-30824-1 REX

SCHWING

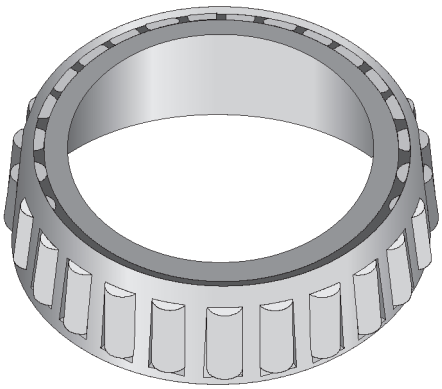

BEARING - 4 3/16" OD,1 1/4" TALL

0016088 MTM 30389446 SCHWING

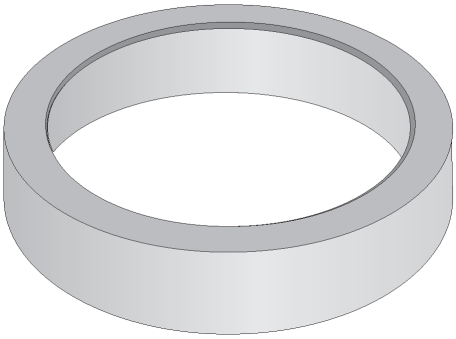

CUP, - 4 1/2"OD, 1" TALL

4GX31 MTM 30389026 SCHWING

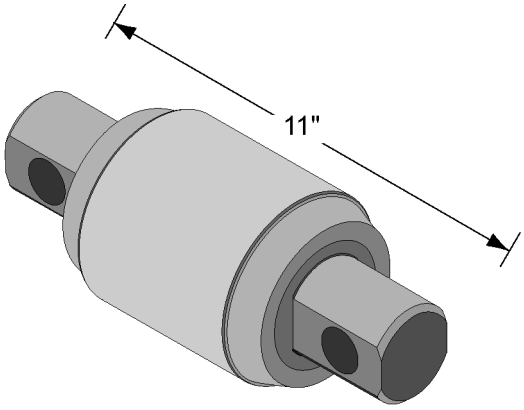

BUSHING - ATRO URETHANE

0183488 MTM 30386609 SCHWING

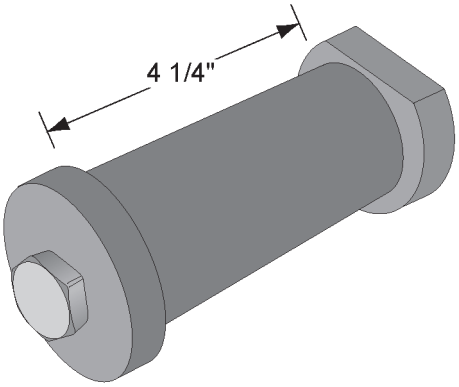

PIN - THUMB, 2 1/4" BM AXLE CYLINDER

0085426 MTM 30389839 SCHWING

SMITH

No Image Available

PIN - SPLIT, 2 1/4" X 4 1/4"

0085426 MTM 55000-51 SMITH

THIS PAGE INTENTIONALLY LEFT BLANK

Hydraulic Valves, Blocks, Regulators, Gauges

ADVANCE / TEREX

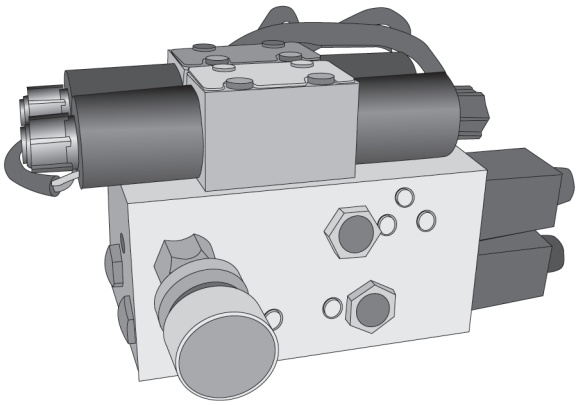

BLOCK - CONTROL, W/2 DIR VALVES
1410444 MTM

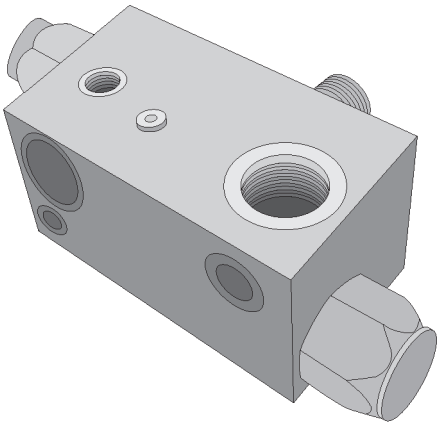

BLOCK - END, VALVE ROD
0108012 MTM 41200 TEREX

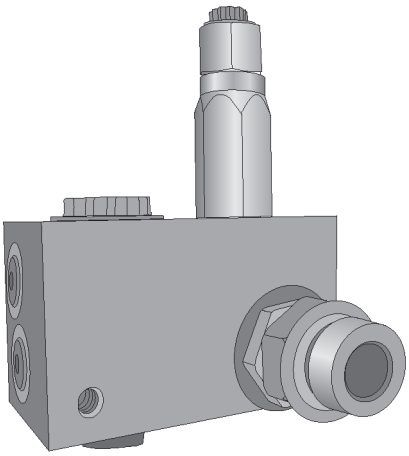

BLOCK - END, VALVE ROD
0108115 MTM 40972 TEREX

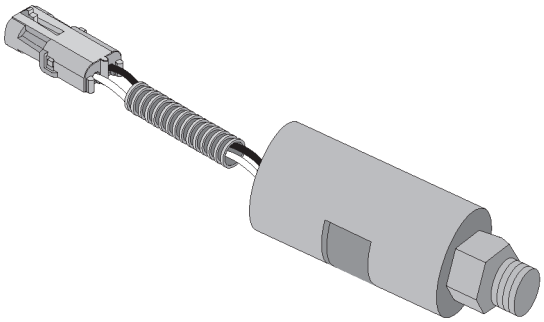

SWITCH - PRESSURE, NASON CHUTE
0126137 MTM 41403 TEREX

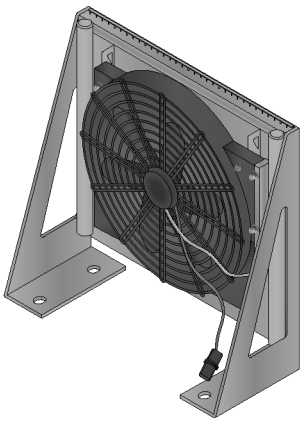

COOLER - OIL & DRUM, W/SENSOR
1236356 MTM 40894 TEREX

CCB

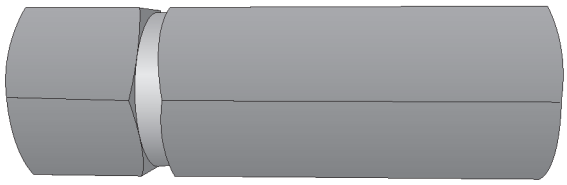

VALVE - CHECK, FLOW, CHA
0016489 MTM 5053410 CCB

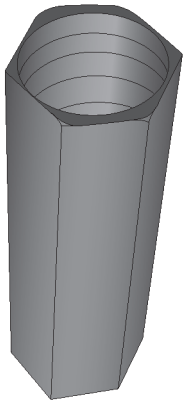

VALVE - DETROL, PC3-2-1.0

0011801 MTM 1521143 CCB

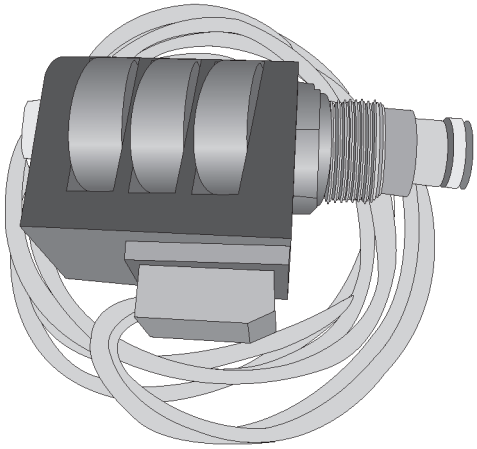

SOLENOID - HYDRAULIC, NC

0016510 MTM 990141 CCB

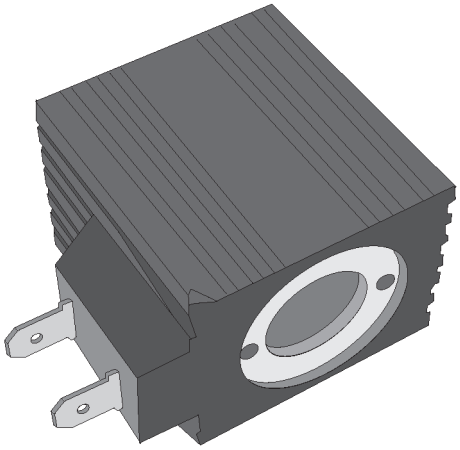

COIL - WATERMAN

0014958 MTM 1521106 CCB

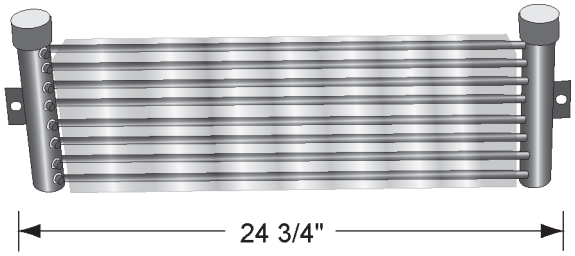

EXCHANGER - HEAT, OIL

0015802 MTM 1610256 CCB

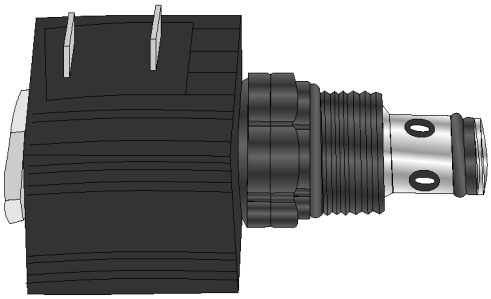

COIL - UP/DOWN, WATERMAN VALVE

0011515 MTM 1521121 CCB

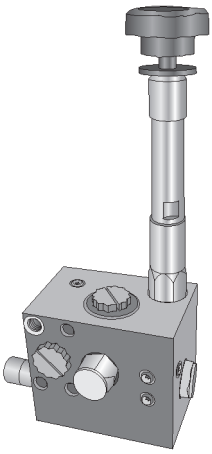

VALVE - UNLOAD, CHA BAL

0016515 MTM 1520926 CCB

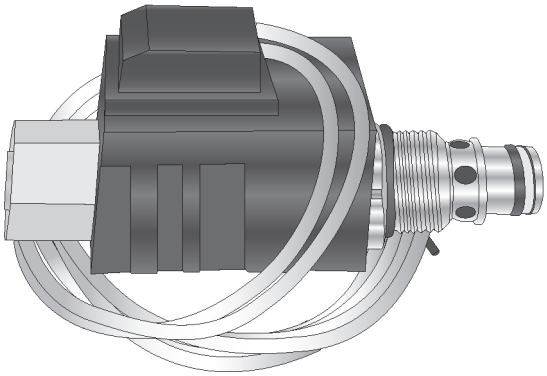

CARTRIDGE - CHA, C/L UP,123S, NO

0016511 MTM 990143 CCB

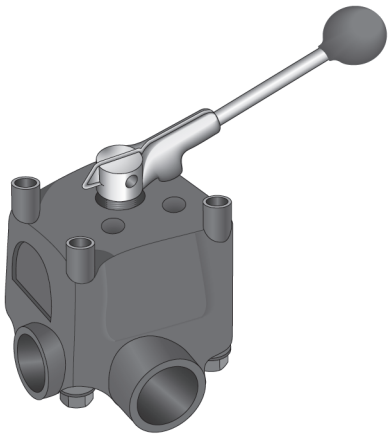

VALVE - CHA #6144-R3-H03

0016512 MTM 1520160 CCB

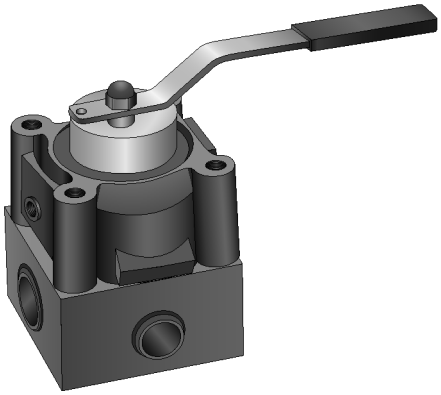

VALVE - 5 PORT, #PP4430-HUCD

0012743 MTM 1521162 CCB

VALVE - 4 PORT, P4430 HUOD

0013133 MTM

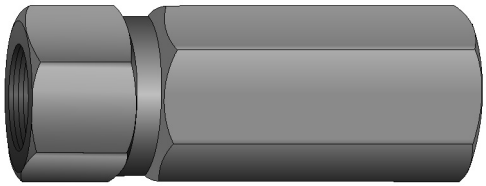

VALVE - CHECK

0014960 MTM 1521161 CCB

KIMBLE

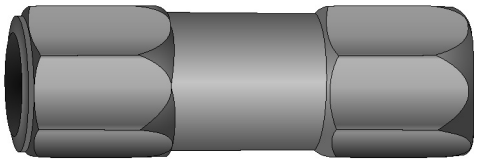

VALVE - CONTROL, FLOW

0012729 MTM 1521182 CCB

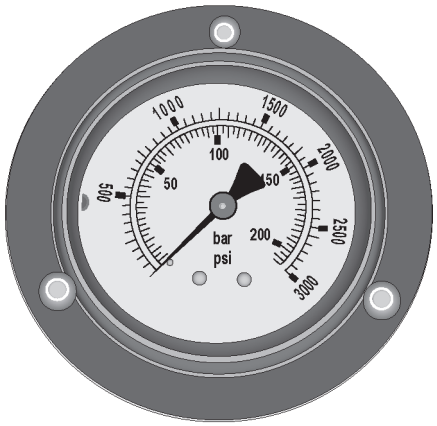

GAUGE - PRESSURE, 0-3000

1328778 MTM C95-03000-25 KIMBLE

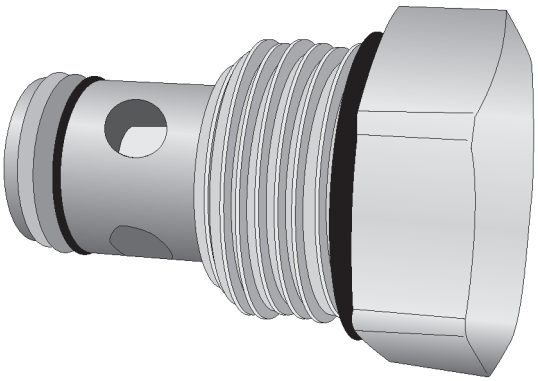

VALVE - CHECK

1329646 MTM H12-25001-00 KIMBLE

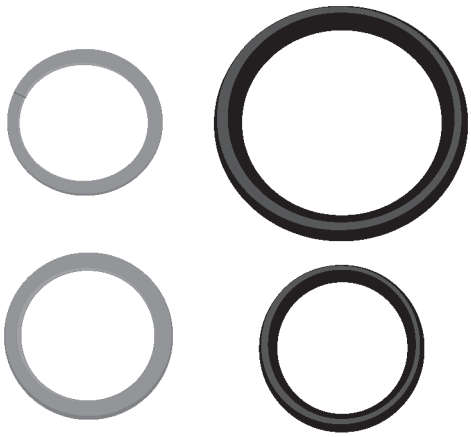

SEAL KIT - O-RING, 1 VALVE

1329647 MTM H71-01277-00 KIMBLE

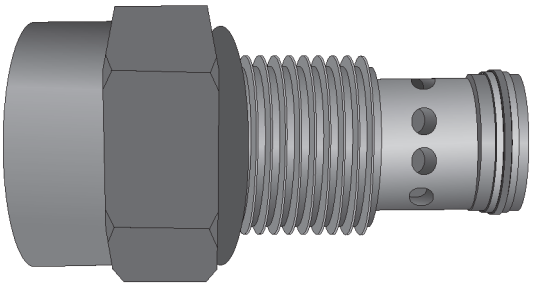

VALVE - FLOW CONTROL

1329649 MTM H12-25500-00 KIMBLE

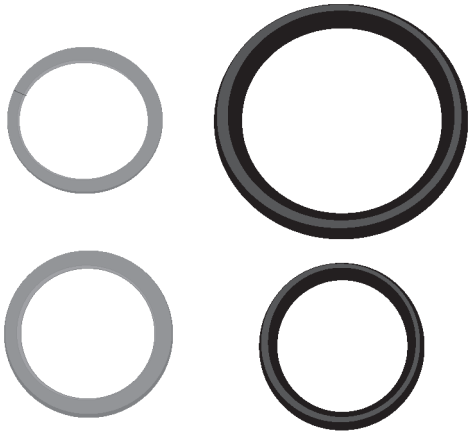

SEAL KIT - O-RING, 1 VALVE

1329570 MTM H7-01278-00 KIMBLE

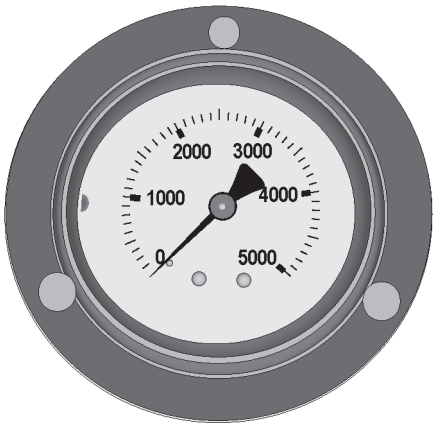

GAUGE - PRESSURE, 0-5000

0085699 MTM C95-05000-25 KIMBLE

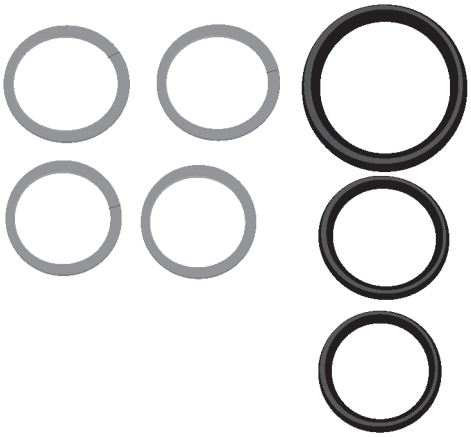

SEAL KIT - O-RING, 1 VALVE

1329651 MTM H71-12009-00 KIMBLE

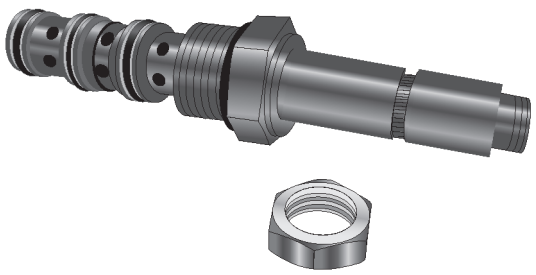

VALVE - CHARGE HOPPER

1329654 MTM H11-23910-00 KIMBLE

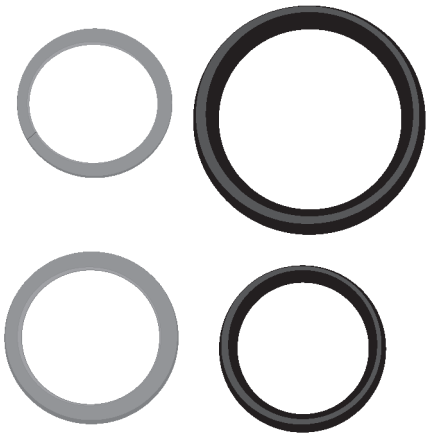

SEAL KIT - O-RING, 1 VALVE

1329656 MTM H71-01022-00 KIMBLE

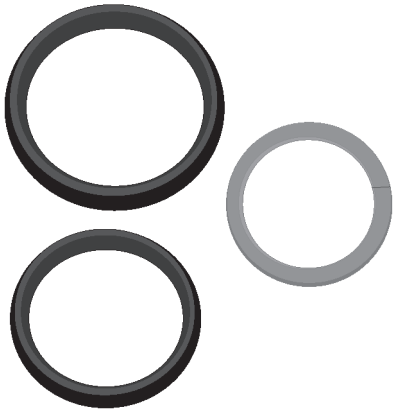

SEAL KIT - VALVE, RELIEF

1331863 MTM H71-12017-00 KIMBLE

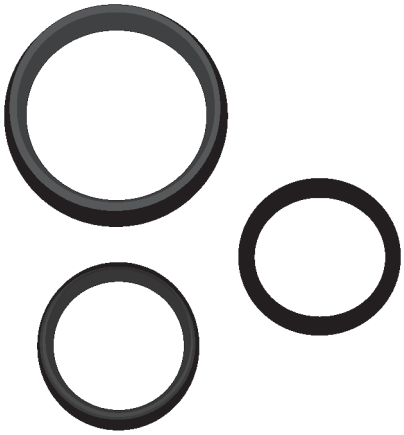

SEAL KIT - VALVE, RELIEF

1331869 MTM H71-12015-00 KIMBLE

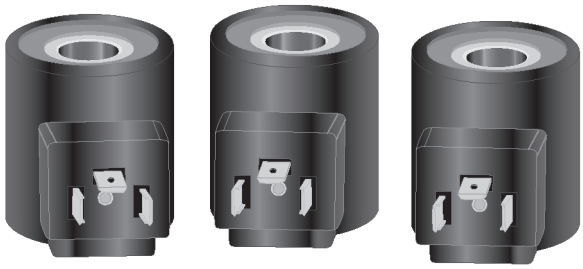

VALVE - SOLENOID

1329558 MTM 6356012 KIMBLE

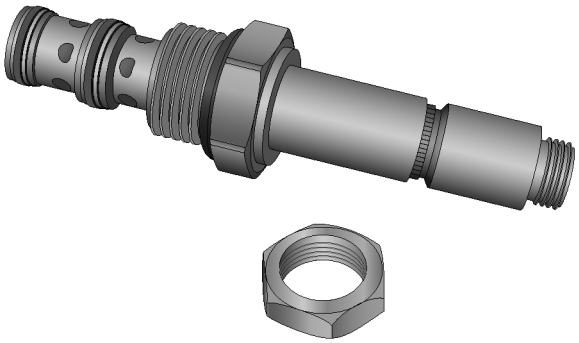

VALVE - BRAKE, CHUTE

1329653 MTM H11-23911-00 KIMBLE

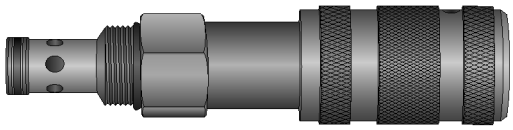

VALVE - CART/NUT, KNOT

1333406 MTM H12-22702-01 KIMBLE

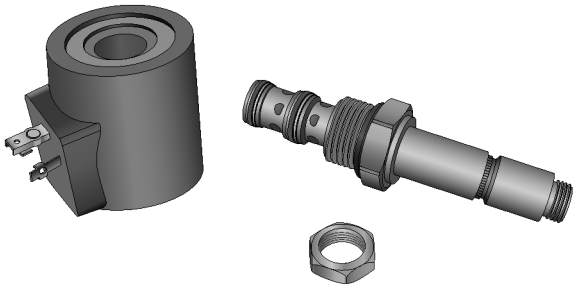

COIL ASSY - VALVE

1329719 MTM CP520-1-B-0-12D-H KIMBLE

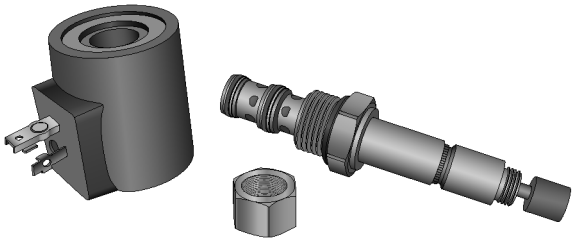

COIL ASSY - VALVE

1329717 MTM CP-5201B012DHM KIMBLE

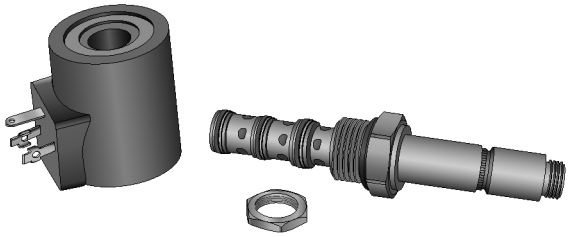

VALVE - SOLENOID

1329720 MTM CP5301BO12DH KIMBLE

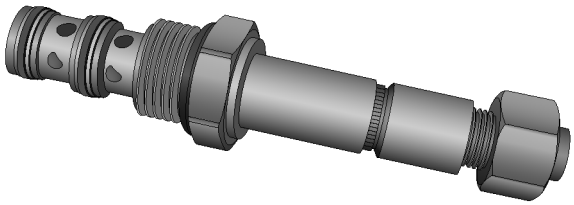

VALVE - SOLENOID

1329718 MTM K11-25600-01 KIMBLE

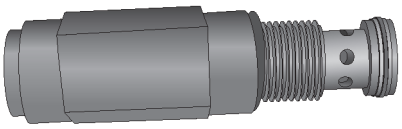

VALVE - RELIEF

1331868 MTM H12-21521-00 KIMBLE

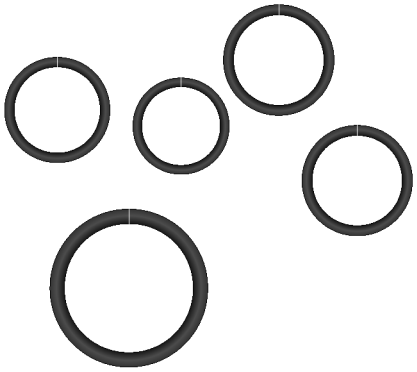

SEAL KIT - SEQUENCE VALVE

1329624 MTM H71-12013-00 KIMBLE

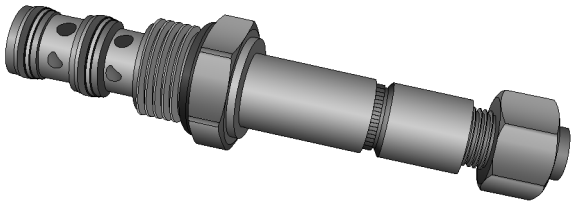

VALVE - SOLENOID

1329718 MTM H11-25600-01 KIMBLE

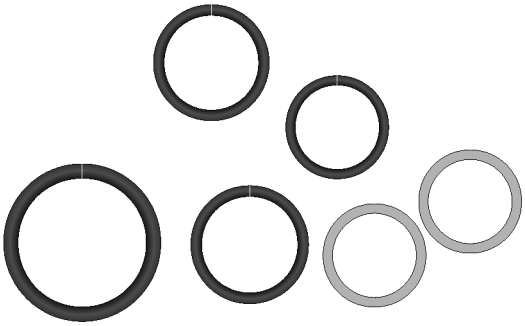

SEAL KIT - PRESSURE SEQUENCING VALVE

13329624 MTM H71-12013-00 KIMBLE

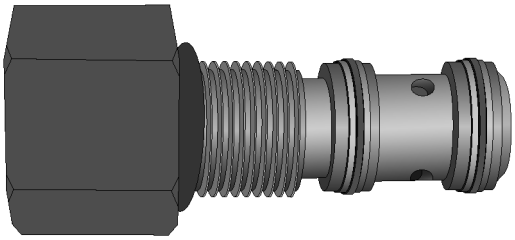

VALVE - PRESSURE SENSING

1331866 MTM H12-34001-00 KIMBLE

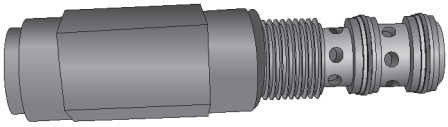

VALVE - SEQUENCE

1331864 MTM H12-21524-00 KIMBLE

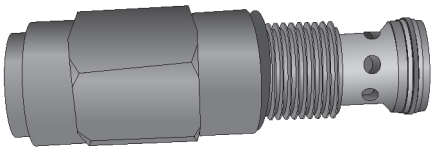

VALVE - RELIEF

1331862 MTM H12-21521-00 KIMBLE

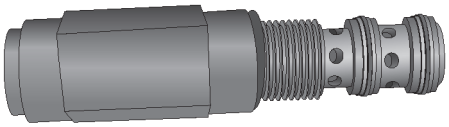

VALVE - PRESSURE REDUCING

1331871 MTM H12-34002-00 KIMBLE

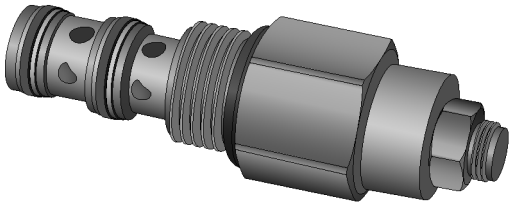

VALVE - COUNTERBALANCE

1331872 MTM H12-31244-00 KIMBLE

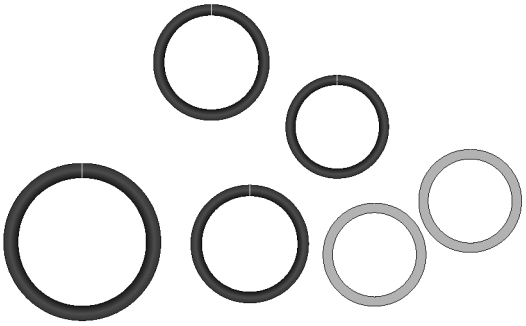

SEAL KIT - COUNTERBALANCE

1331873 MTM H71-12057-00 KIMBLE

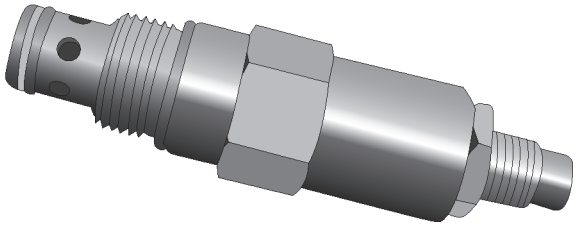

VALVE - PRV, CARTRIDGE, W/JAM NUT ONLY

1333494 MTM H12-22701-00 KIMBLE

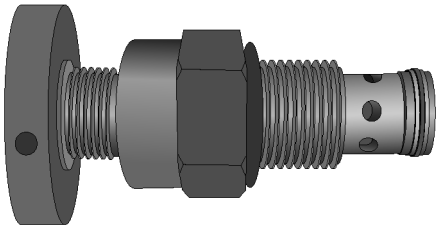

VALVE - NEEDLE

1329722 MTM H12-23910-00 KIMBLE

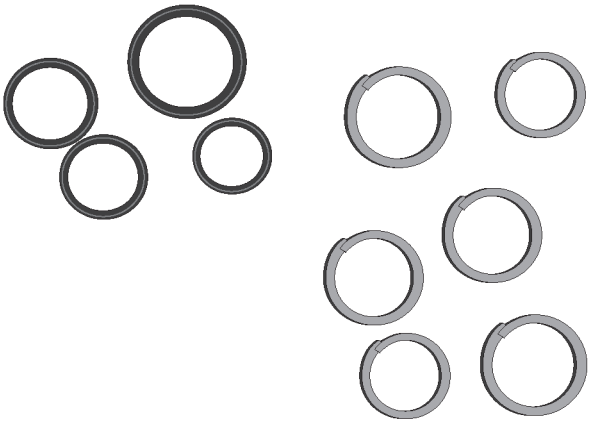

SEAL KIT - SOLENIOD VALVE

1329574 MTM H71-12023-00 KIMBLE

LONDON

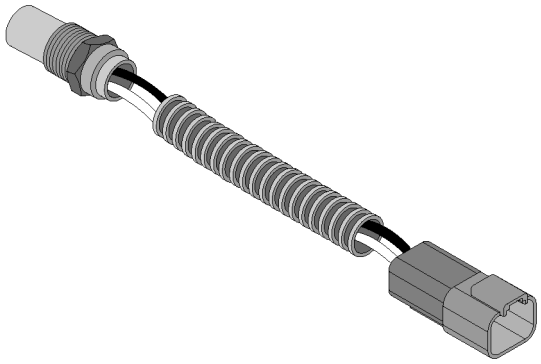

SWITCH - TEMP CTRL, 195DEG

1339870 MTM E17-00195-00 KIMBLE

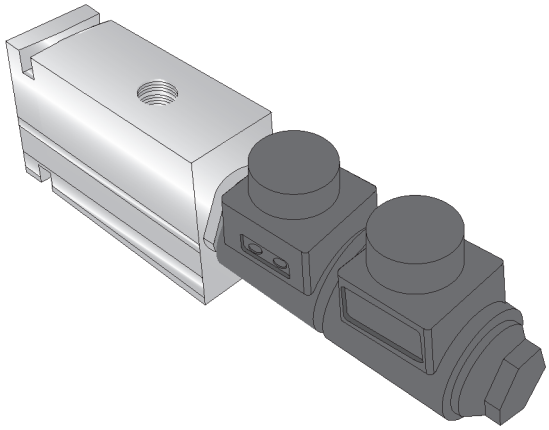

VALVE - SOLENOID, MIX/DISCHARGE

1255491 MTM MA-39790 LONDON

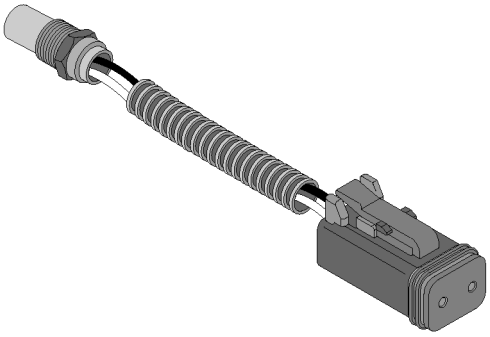

SWITCH - TEMP CTRL, 150DEG

1339868 MTM E17-00150-00 KIMBLE

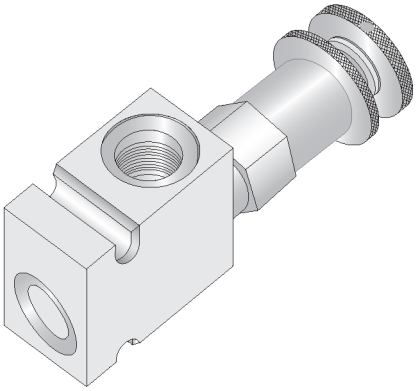

VALVE - RELIEF, HYDRAULIC

1430253 MTM MA-39231 LONDON

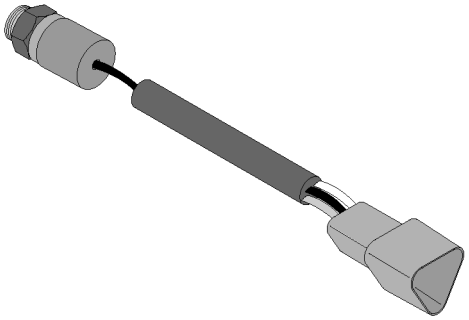

SWITCH,1000 PSI,BM CYL

1339871 MTM E16-10002-01 KIMBLE

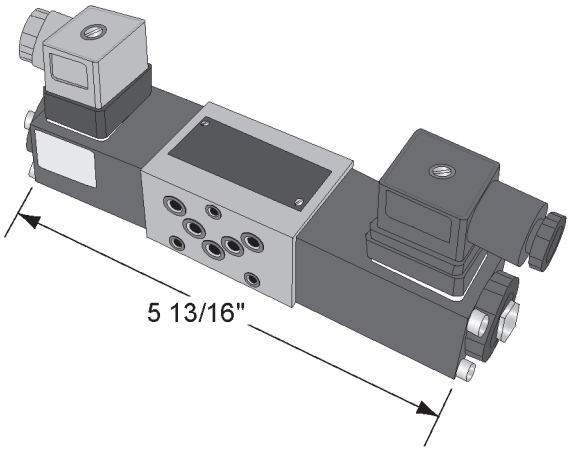

VALVE - SOLENOID

1255634 MTM MB-40779-01 LONDON

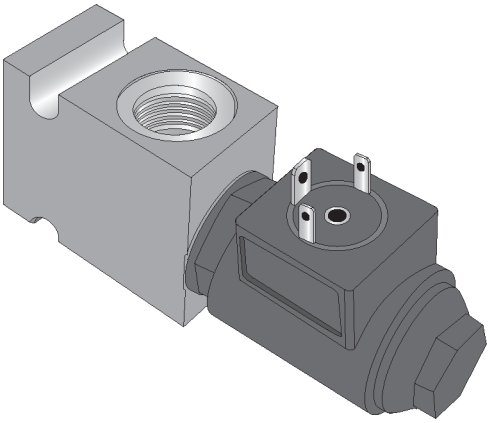

VALVE - SOLENOID, PAUSE/RESUME

1255489 MTM MA-39688 LONDON

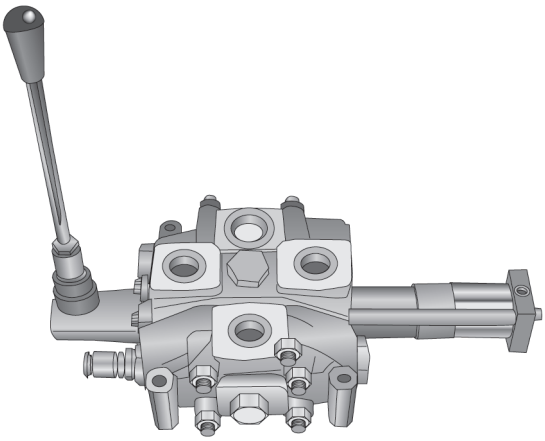

VALVE - CONTROL, CYLINDER

1430187 MTM MA-37733 LONDON

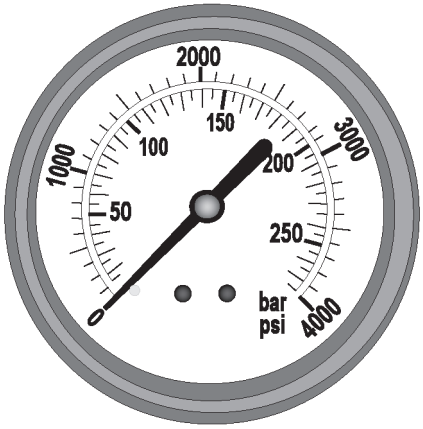

GAUGE - PRESSURE, HYDRAULIC

1430256 MTM MA-39269 LONDON

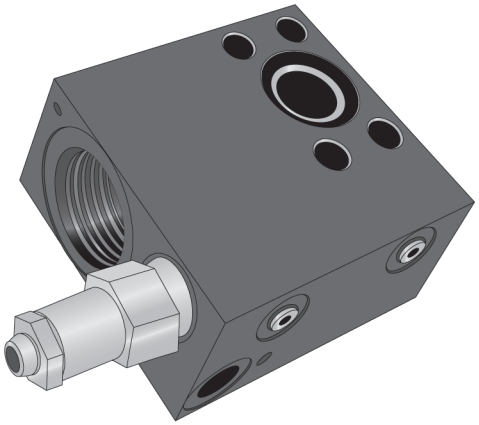

BLOCK - CONTROL, ROD END

1430184 MTM MA-37730 LONDON

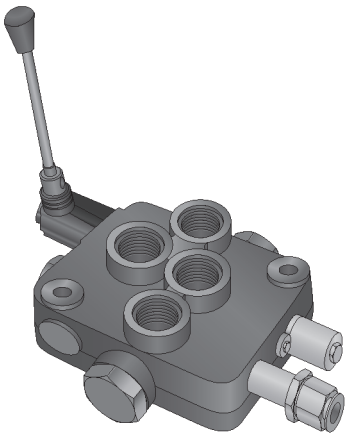

VALVE - HYDRAULIC, CHUTE

1430164 MTM MA-35899 LONDON

MTM

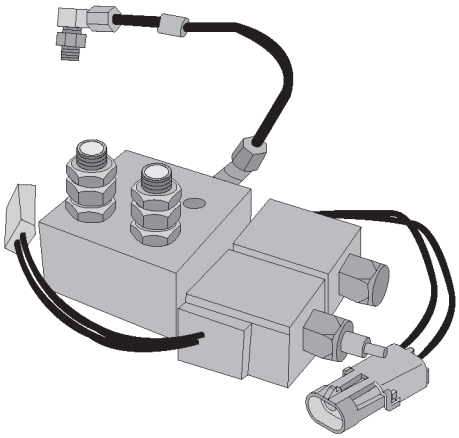

VALVE ASSY - SPEED, CONSISTENT

0002523 MTM

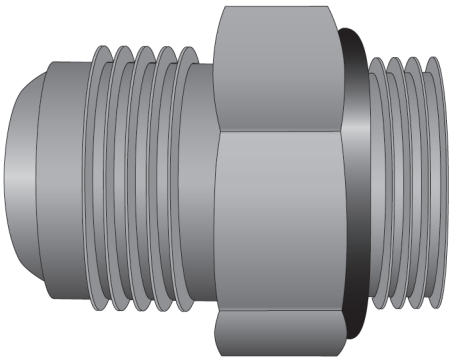

VALVE - CHECK, C BLK

0085757 MTM

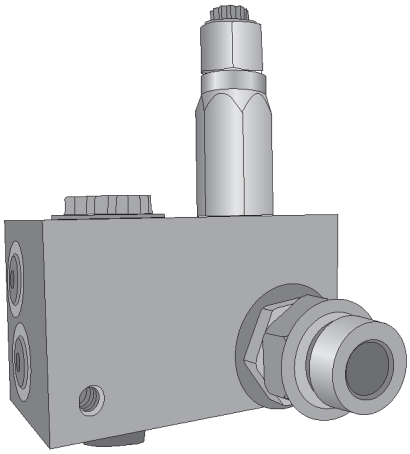

BLOCK - HYDRAULIC, CONTROL, ROD END, CB4

0108115 MTM

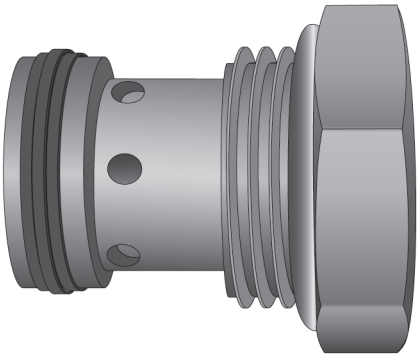

VALVE - CHECK, DBL ACT COMBO BLK

0126091 MTM

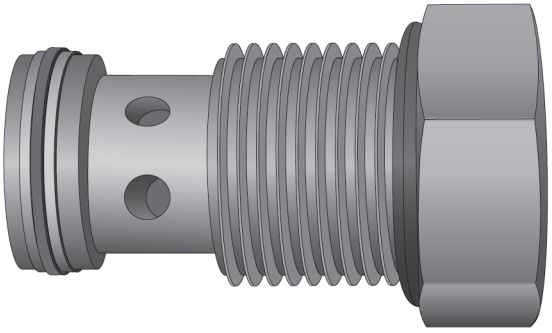

VALVE - CHECK, 200 PSI

0106597 MTM

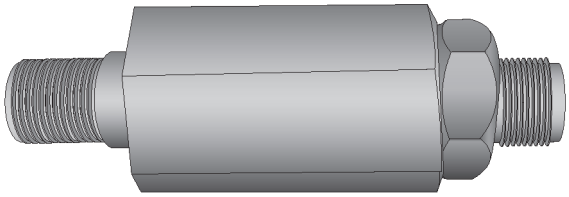

VALVE - HYDRAULIC, FLOW FUSE

0108011 MTM

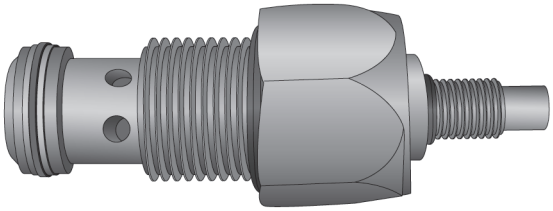

VALVE - CONTROL, FLOW, HYD CHUTE

1427868 MTM

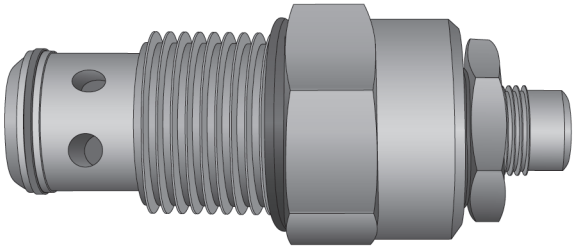

VALVE - NEEDLE, # 8

0126013 MTM

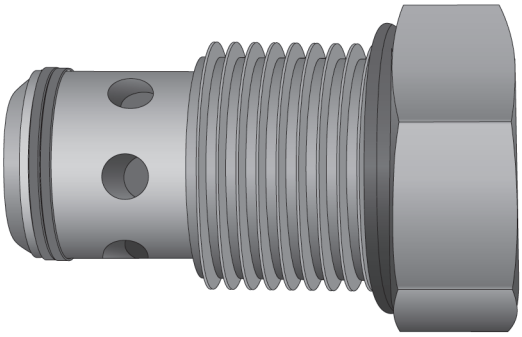

VALVE - CHECK, 5 PSI

0106592 MTM

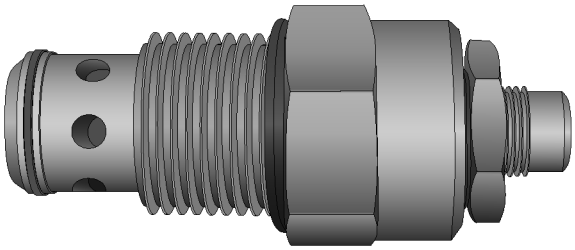

VALVE - CONTROL, HYDRAULIC CHUTE, UP

1426928 MTM

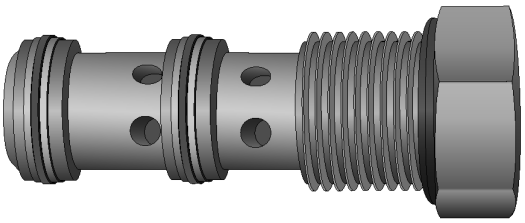

CC C/L PILOT CK - VLVE (10PC5A)

0085712 MTM

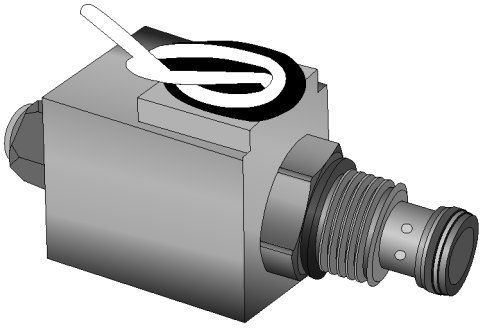

CARTRIDGE - SOLENOID, UP, NO

1168120 MTM

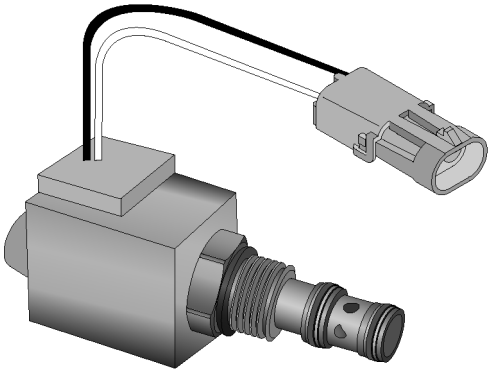

CARTRIDGE - SOLENOID, W/COIL

1168396 MTM

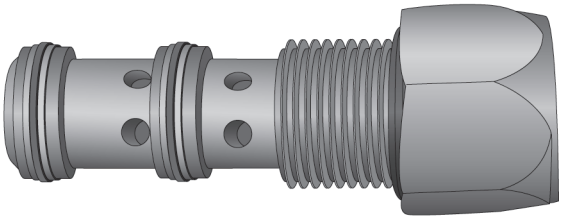

VALVE - CHECK, 3;1 RATIO

0126551 MTM

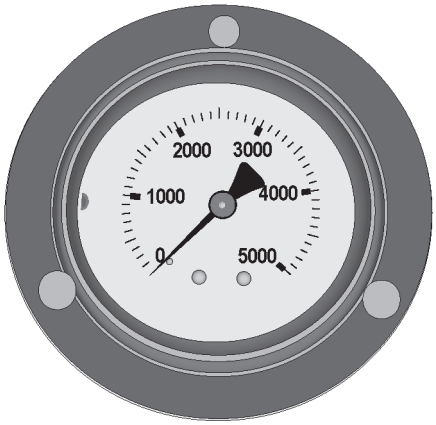

GAUGE - PRESSURE, HYDRAULIC, 0-5000 PSI

0085699 MTM

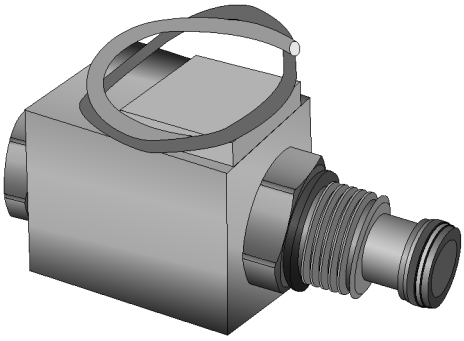

CARTRIDGE - SOLENOID, UP, NC

1168121 MTM

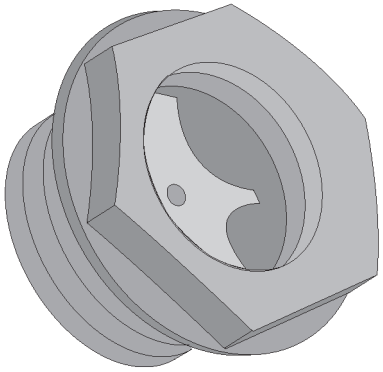

GLASS - SITE, BM, PLASTIC

0182886 MTM

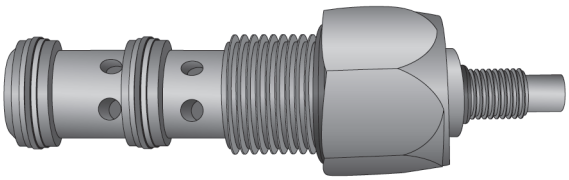

CARTRIDGE - PRIORITY FLOW

1138940 MTM

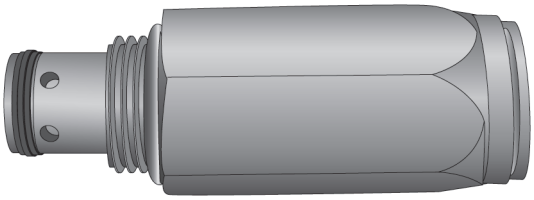

VALVE - RELIEF

1570588 MTM

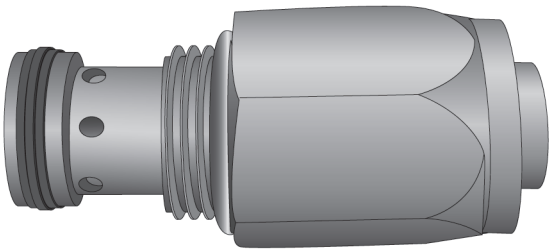

CARTRIDGE - HPRV, PO, 3300 PSI, #16

0085782 MTM

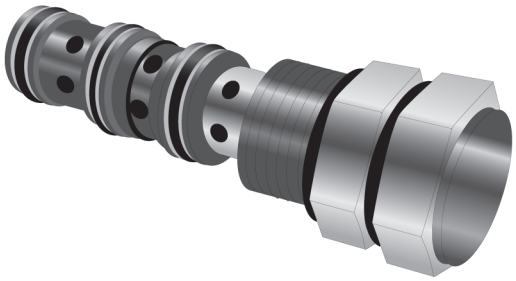

CARTRIDGE - PRESSURE, 3W2P, W/INT DRAIN

1168391 MTM

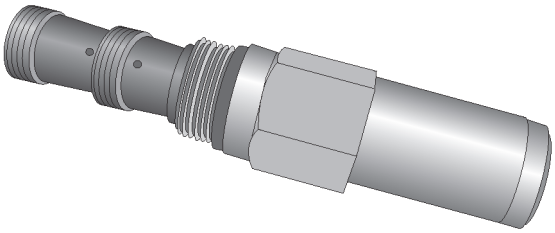

REGULATOR - PRESSURE, HYD, FIXED

1168393 MTM

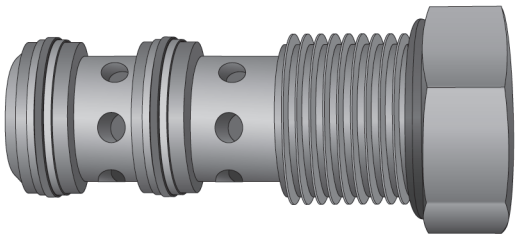

E BLK SHUTTLE - VLVE

0106635 MTM

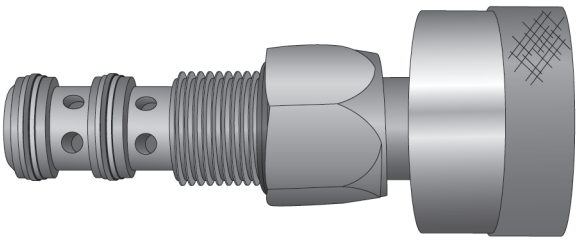

CARTRIDGE - PRESSURE, HYD, W/KNOB

1168394 MTM

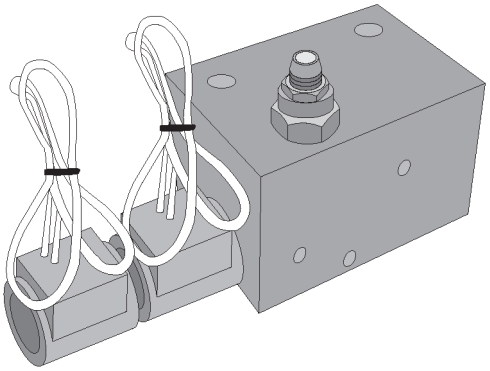

BLOCK - HYDRA FORCE, DRUM CONTROL

0183925 MTM

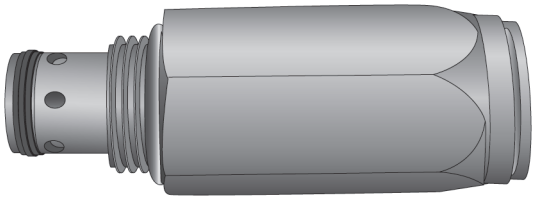

CARTRIDGE - PRESSURE, HYD, 3300 PSI, SIZE 10

0108006 MTM

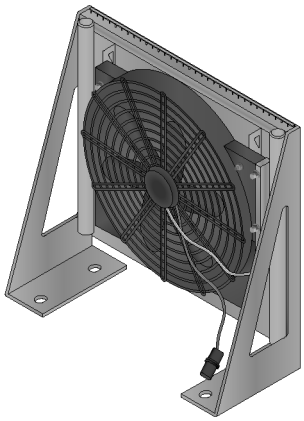

COOLER - MX OIL, DRUM W/ SENSOR

1236356 MTM

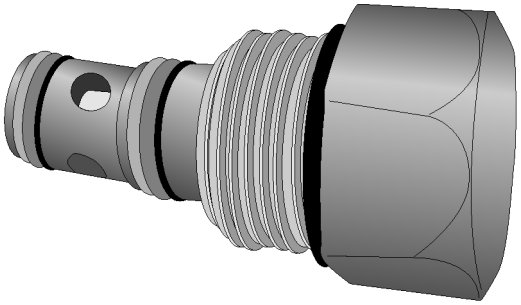

VALVE - LOGIC

0016518 MTM

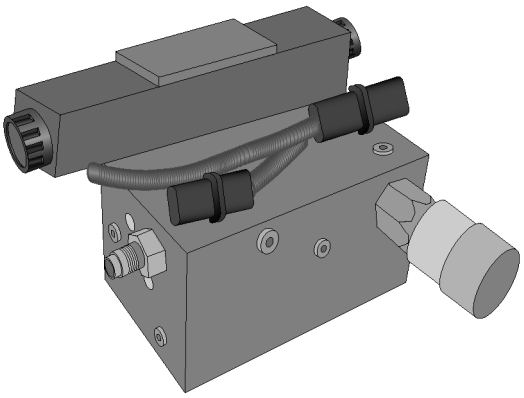

BLOCK - HYDRAULIC, E-ASSY

0106630 MTM

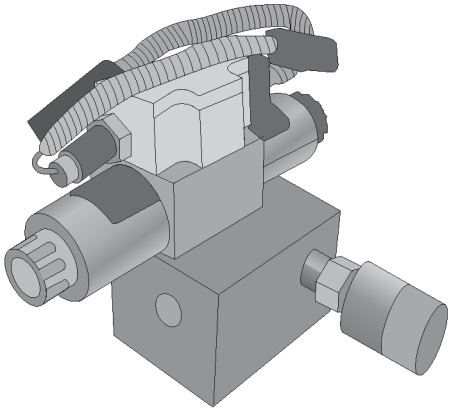

BLOCK - CONTROL BM2 AND 3

0108010 MTM

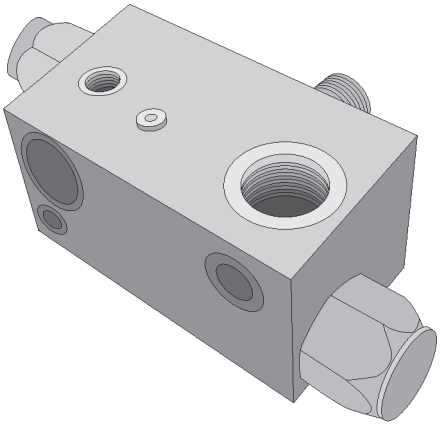

BLOCK - HYDRAULIC, HIGH FLOW

0108012 MTM

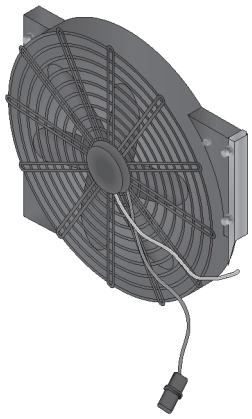

MOTOR ASSY - W/FAN, 14”

0108576 MTM

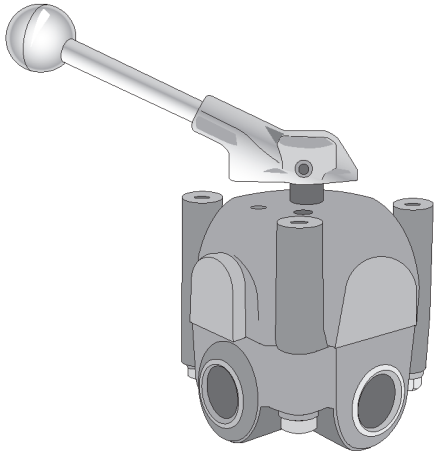

VALVE - REX, BOOSTER, 4-WAY

1139326 MTM 298-00179-53 REX

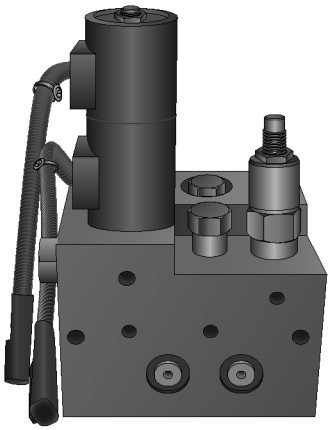

BLOCK - OPEN CENTER CHUTE

0106590 MTM

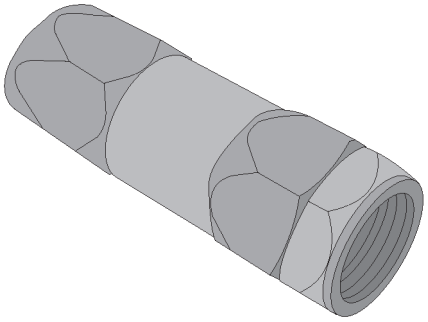

VALVE - CHECK, BOOSTER

1147810 MTM 298-00156-53 REX

REX

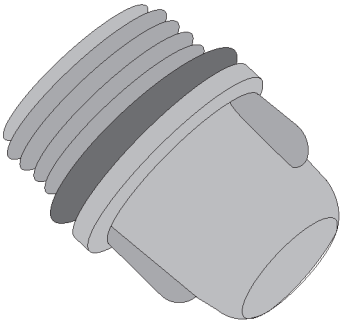

GAUGE - SITE, PLASTIC, OIL LEVEL

1142833 MTM 298-02132-56 REX

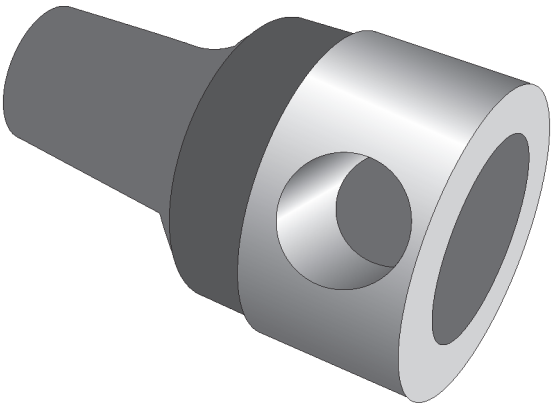

REGULATOR - NORGREN

0014553 MTM 298-02104-56 REX

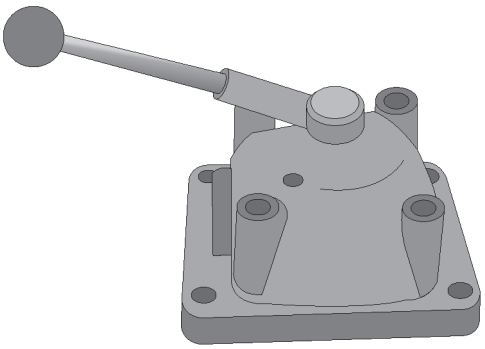

VALVE - 4-WAY, SHEAR

1138064 MTM 102-11726-01 REX

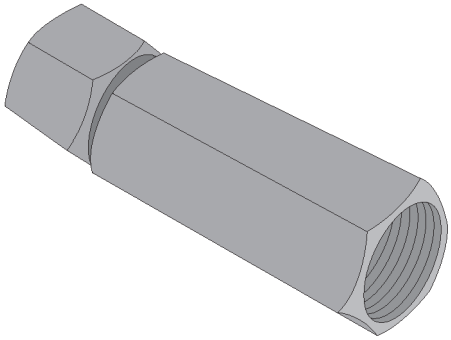

VALVE - CHECK, RELIEF, 3/4" NPSF

1112974 MTM 298-00181-53 REX

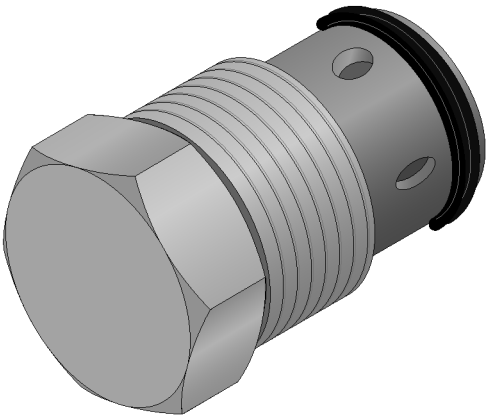

CARTRIDGE - CHECK VALVE

1112973 MTM 102-12273-01 REX

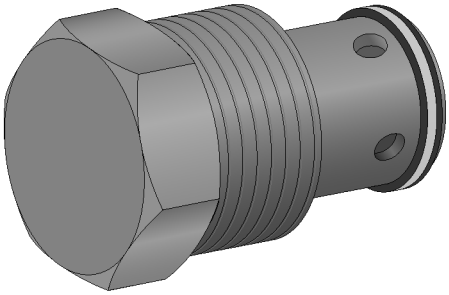

VALVE - CHECK, 5 PSI

1139224 MTM 102-12273-04 REX

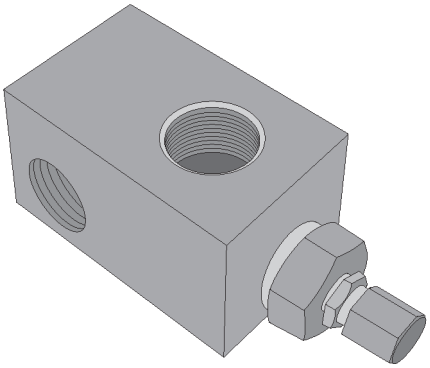

VALVE - RELIEF, LM

1173734 MTM 298-00180-53 REX

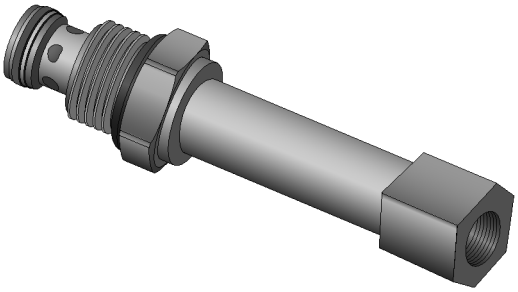

CARTRIDGE - VALVE, 2 WAY

1112769 MTM 102-12273-19 REX

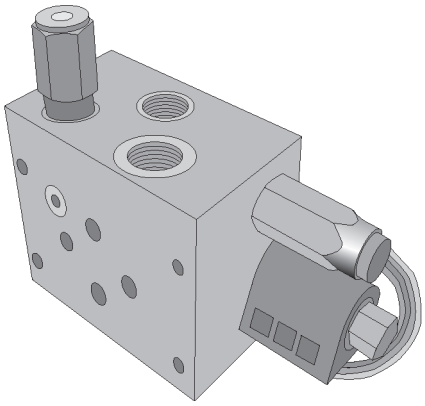

CONTROL VALVE - AXLE

1112623 MTM 102-31786-01 REX

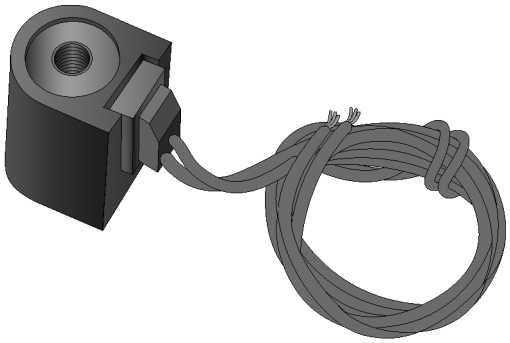

COIL - SOLENOID VALVE

1112903 MTM 102-12273-09 REX

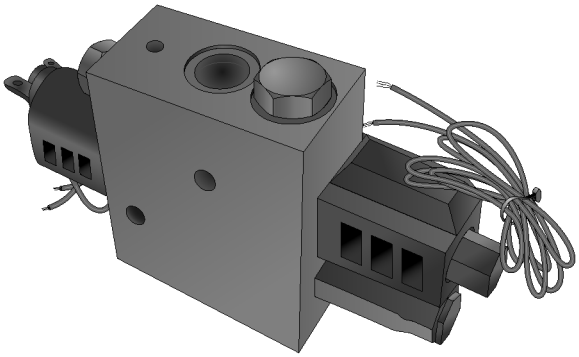

VALVE - HOIST, HYDRA

1112853 MTM 102-13259-01 REX

SCHWING

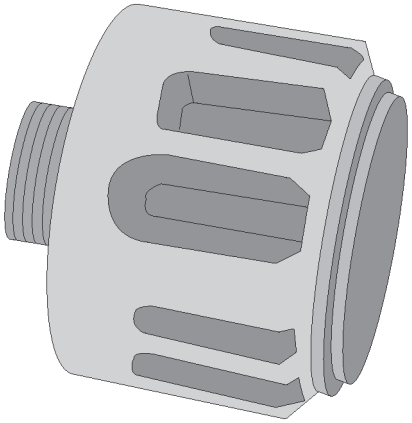

FILTER - HYDRAULIC BREATHER

1332365 MTM 30389925 SCHWING

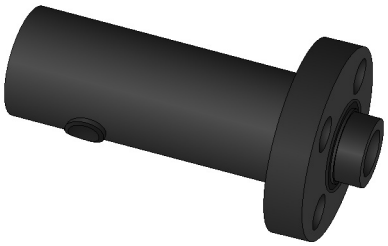

VALVE - PRESSURE COMP

1113268 MTM 602-00094-01 REX

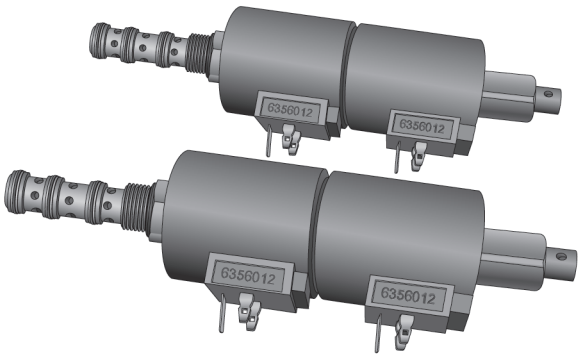

CARTRIDGE - SOLENOID, W/COILS, CHT UP/DWN

1329576 MTM 30389539 SCHWING

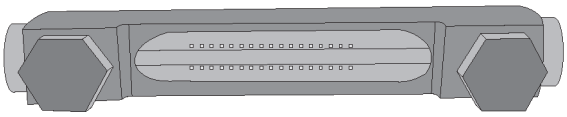

SIGHT GLASS - HYDRAULIC, W/TEMP

1332406 MTM 30389469 SCHWING

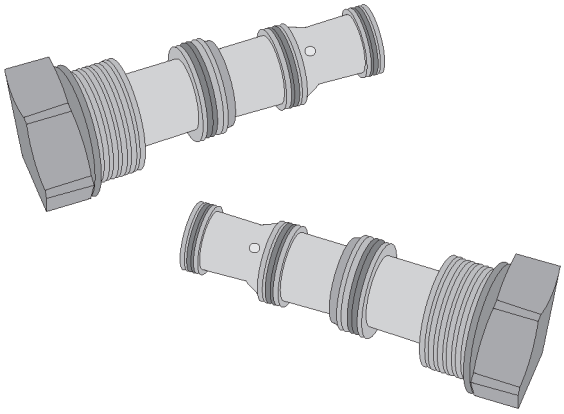

VALVE - CHECK, CHUTE BLOCK

1329559 MTM 30389318 SCHWING

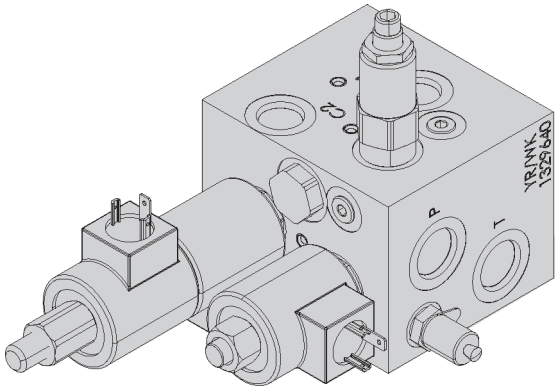

BLOCK - HYDRAULIC, CONTROL, W/O BOOSTER

1329640 MTM 30389135 SCHWING

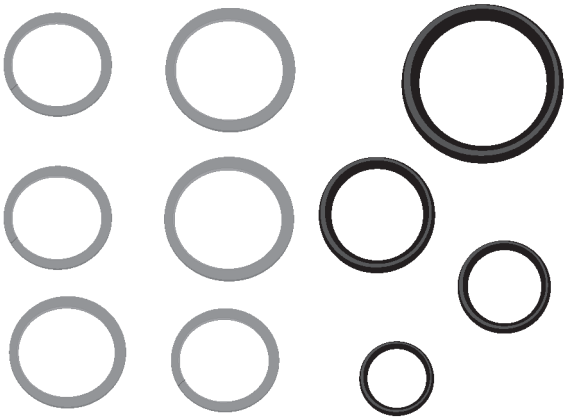

KIT - SEAL

1329560 MTM 30389537 SCHWING

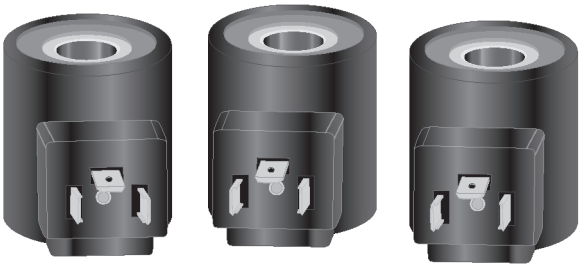

VALVE - SOLENIOD

1329558 MTM 30389542 SCHWING

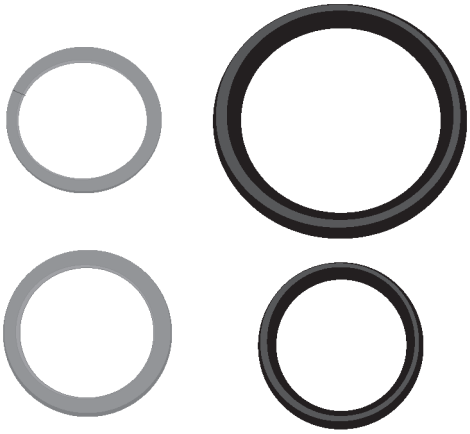

KIT - SEAL

1329570 MTM 30389538 SCHWING

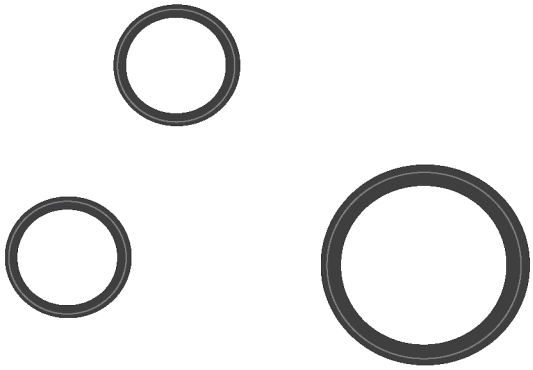

KIT - SEAL

1329572 MTM 30389575 SCHWING

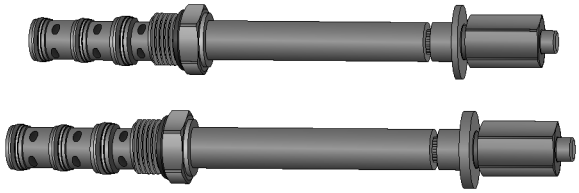

CARTRIDGE - SOLENOID, CHUTE UP/DWN

1329573 MTM 30389541 SCHWING

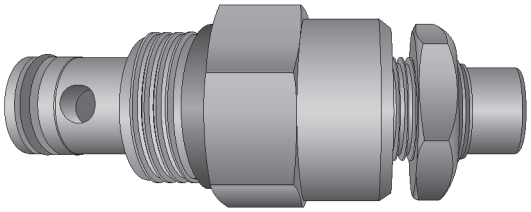

CARTRIDGE - CHECK, FLOW

1329561 MTM 30389319 SCHWING

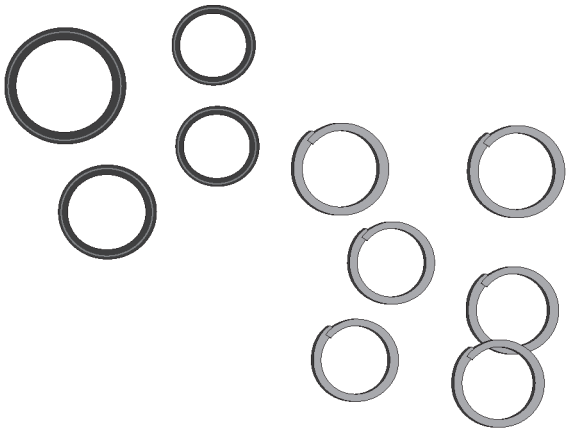

SEAL KIT - FOR 30389539 SOLENOID

1329574 MTM 30389540 SCHWING

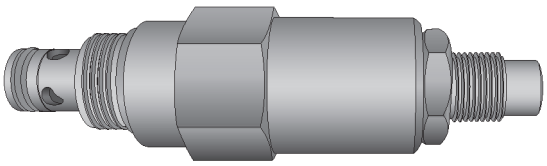

VALVE - RELIEF, CHUTE BLOCK

1329571 MTM 30389550 SCHWING

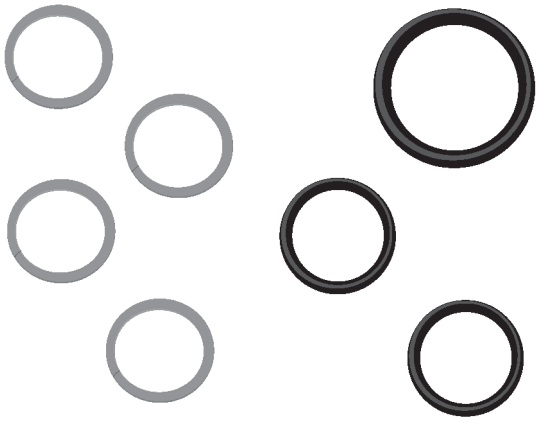

SEAL KIT - FOR 30389547 CARTRIDGE

1329578 MTM 30389578 SCHWING

CARTRIDGE - SOLENOID, W/COILS, CHT UNLOADER

1329577 MTM 30389547 SCHWING

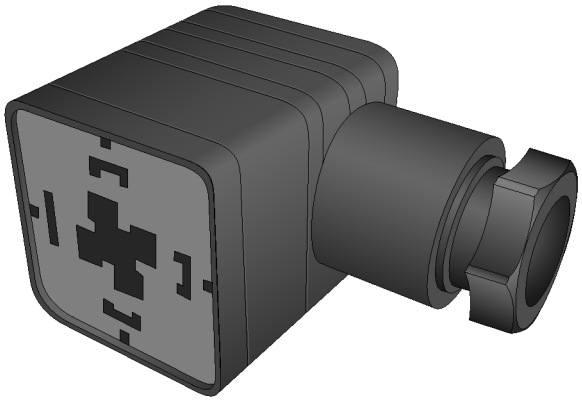

CONNECTOR - BLACK

1329619 MTM

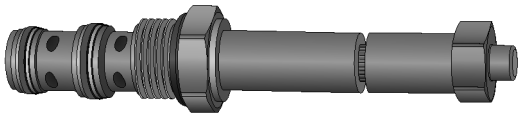

CARTRIDGE - SOLENOID, CHUTE UNLOADER

1329575 MTM 30389549 SCHWING

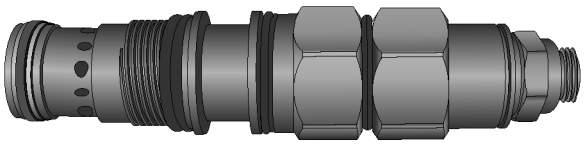

VALVE - SUN

1329579 MTM 30389376 SCHWING

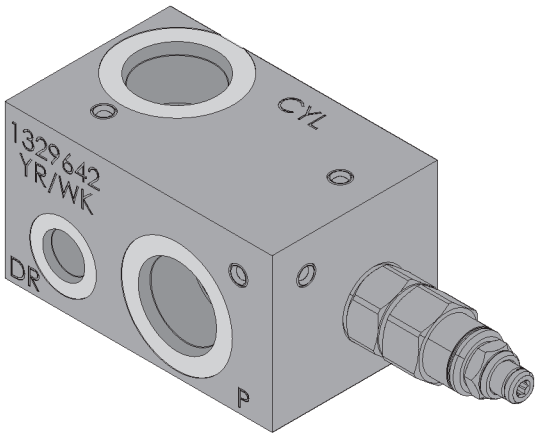

VALVE - HYDRAULIC, AXLE ROD END

1329642 MTM 30389133 SCHWING

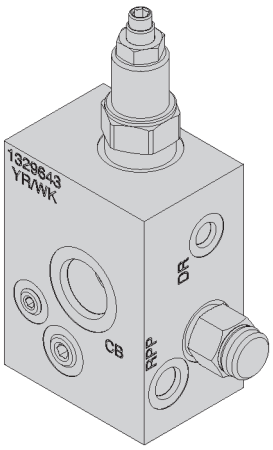

VALVE - HYDRAULIC, PISTON END

1329643 MTM 30389132 SCHWING

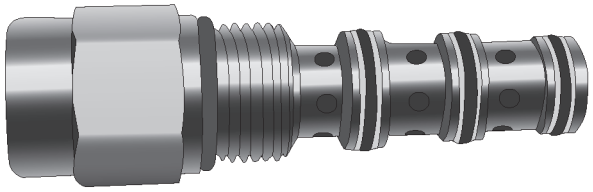

VALVE - DIRECTIONAL, PILOTED, PISTON END

1329582 MTM 30389534 SCHWING

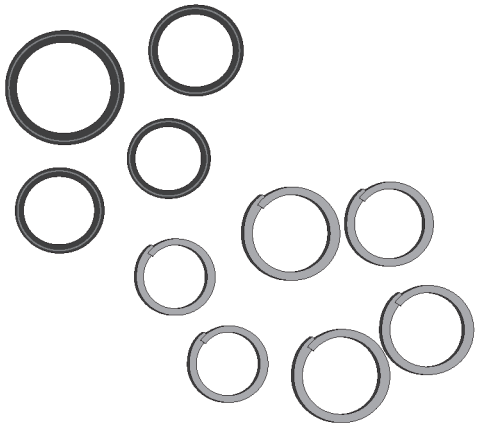

SEAL KIT - FOR 30389534 VALVE

1329574 MTM 30389540 SCHWING

SEAL KIT - FOR 30389530

1329580 MTM 30389531 SCHWING

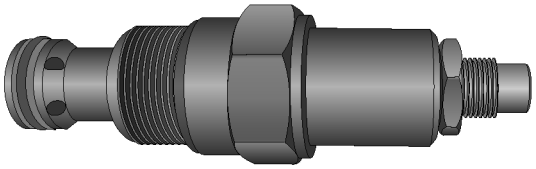

VALVE - RELIEF, 3300 PSI, PISTON END

1329601 MTM 30389532 SCHWING

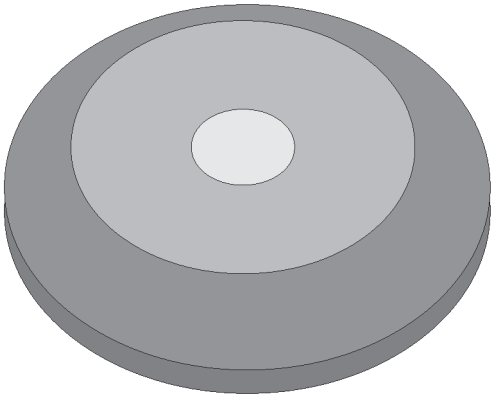

PLUG - DISC, .025”

1329581 MTM 30389536 SCHWING

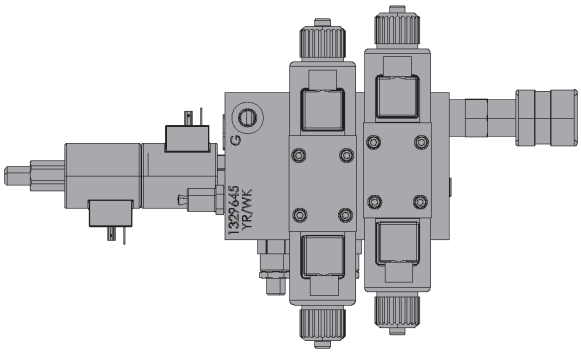

BLOCK - COMBO

1329645 MTM 30389134 SCHWING

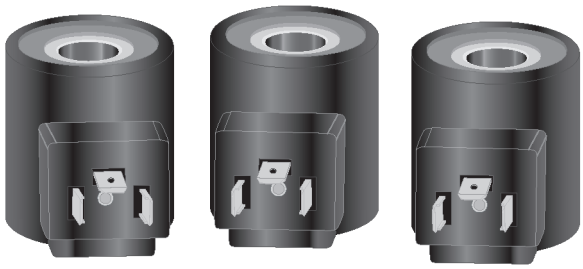

COIL - SOLENOID

1329558 MTM 30389542 SCHWING

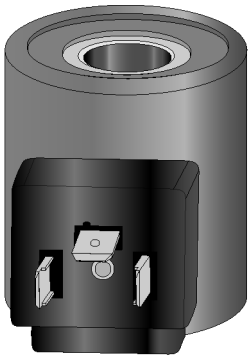

SOLENOID - COIL, PARKER

1498833 MTM 30389546 SCHWING

SEAL KIT - FOR 1329601 RELIEF VLV

1329602 MTM 30389533 SCHWING

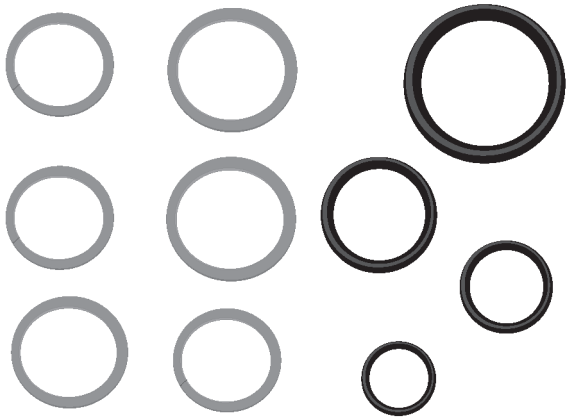

SEAL - KIT - FOR 132955

1329560 MTM 30389337 SCHWING

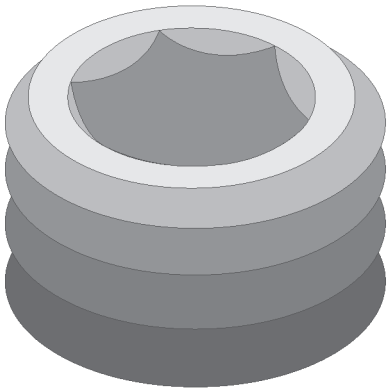

PLUG - ORIFICE, JEM, CHT BLK ONLY

1329635 MTM 6112055 SCHWING

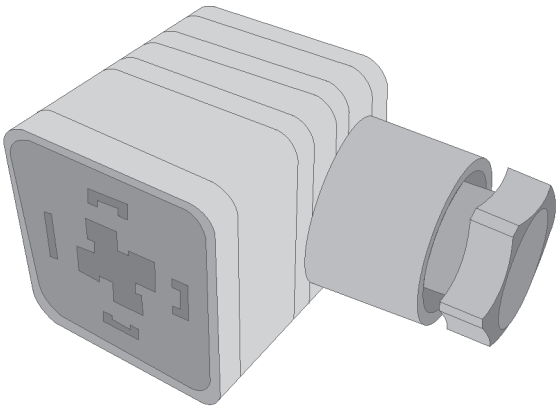

CONNECTOR - PLUG, D,C, GREY

1329620 MTM

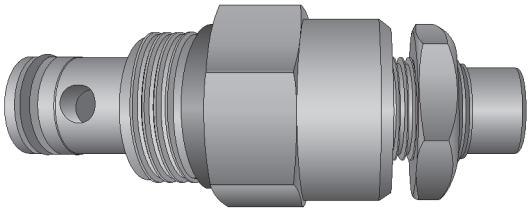

CARTRIDGE - FLOW, CHECK

1329561 MTM 30389319 SCHWING

No Image Available

CONNECTOR - PLUG, F,E, BLACK

1329616 MTM

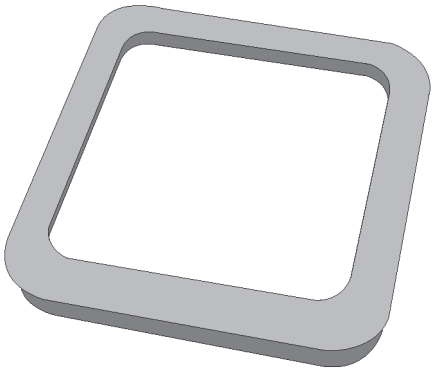

CARTRIDGE - CHECK, FLOW

1329621 MTM

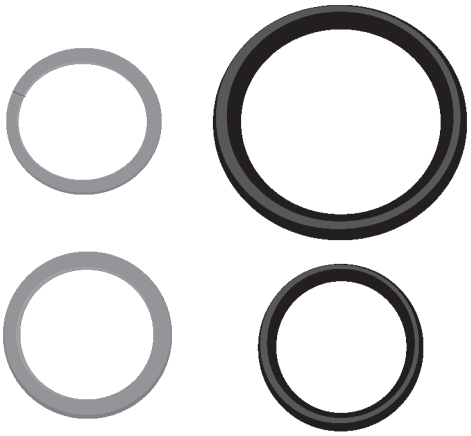

SEAL - KIT

1329570 MTM 30389358 SCHWING

VALVE - PRESSURE, REDUCING

1329623 MTM 30389543 SCHWING

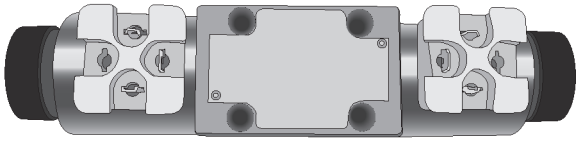

VALVE - CONTROL, DIRECTIONAL

1329625 MTM 30389545 SCHWING

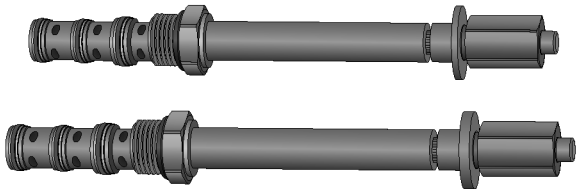

CARTRIDGE - SOLENIOD, CHT UP/DWN

1329573 MTM 30389541 SCHWING

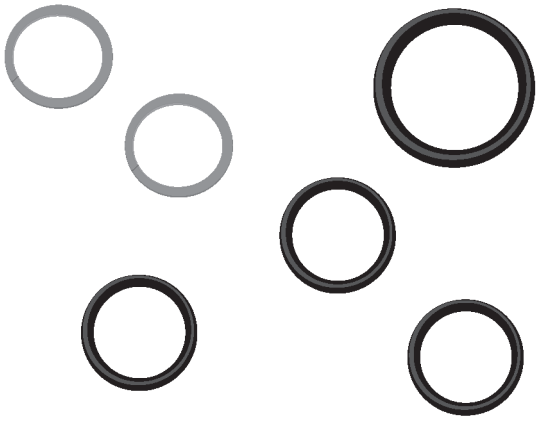

SEAL KIT - FOR 30389543, REDUCING VALVE

1329624 MTM 30389544 SCHWING

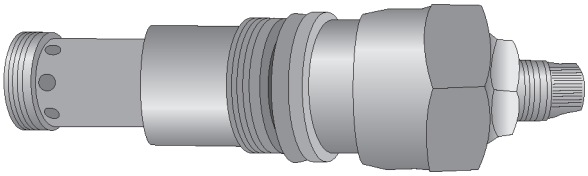

VALVE - SEQUENCE

1111863 MTM 5500044103 SMITH

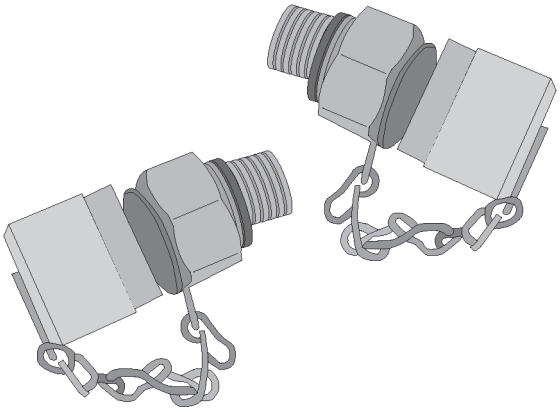

FITTING - TEST PORT DIAGNOSTIC

1329618 MTM 10195884 SCHWING

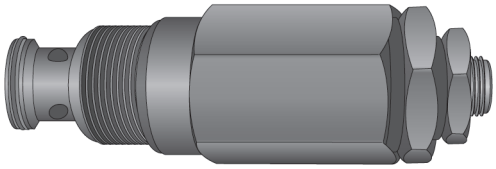

VALVE - RELIEF

1111865 MTM 5500044105 SMITH

SMITH

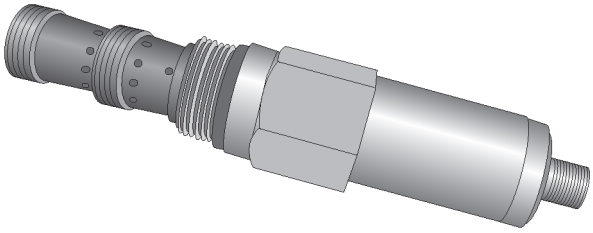

VALVE - PRESSURE, DIRECT ACTING

1111860 MTM 5500044004 SMITH

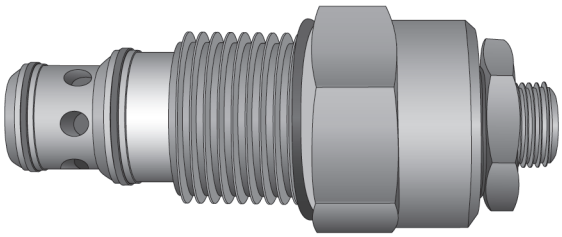

VALVE - OVERCENTER

1111862 MTM 5500044101 SMITH

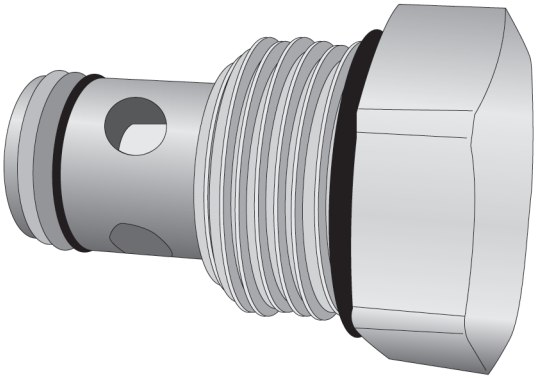

VALVE - CHECK

1111864 MTM 5500044104 SMITH

KIT - ACCUMULATOR, CHARGE, CHA

0012983 MTM 780014 SMITH

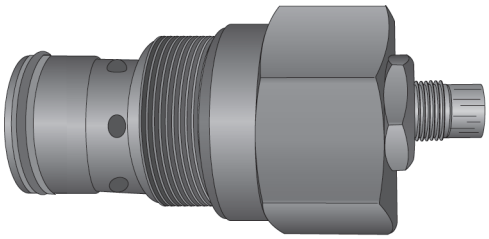

VALVE - SHUTTLE

1111866 MTM 5500044106 SMITH

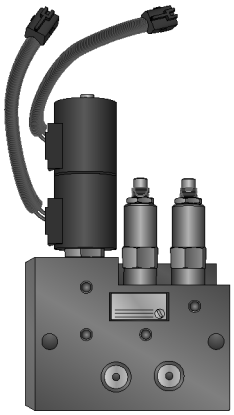

VALVE

1111551 MTM 43811000 SMITH

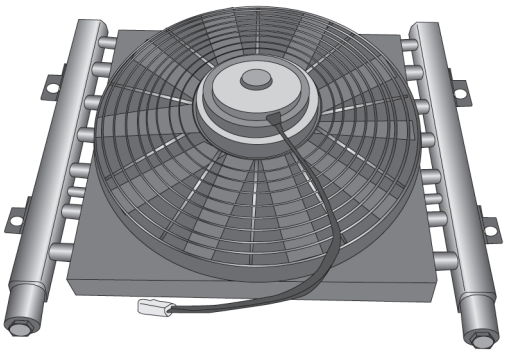

COOLER - HYDRAULIC, W/MOTOR AND FAN

1110883 MTM 2165002 SMITH

THIS PAGE INTENTIONALLY LEFT BLANK

Manifold Assemblies

CBMW

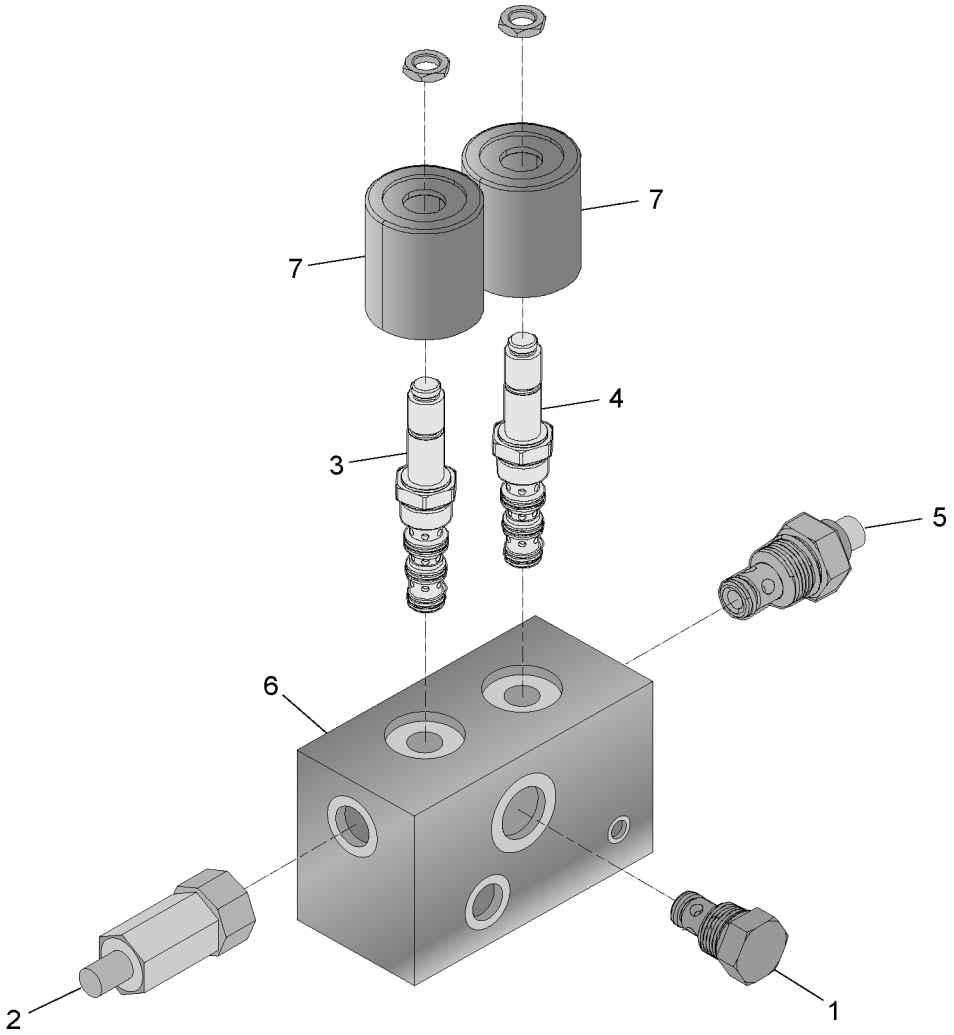

Item	MTM Part No.	CBMW Part No.	Description
	1359061	90232100	MANIFOLD ASSY
1	1360066	NPN	CHECK VALVE
2	1360067	NPN	FLOW CONTROL
3	1360068	NPN	SOLENOID VALVE
4	1360069	NPN	SOLENOID VALVE
5	1360070	NPN	RELIEF VALVE
6	1360071	NPN	BARE MANIFOLD BLOCK
7	1360072	NPN	SOLENOID

KIMBLE H10-25500-01

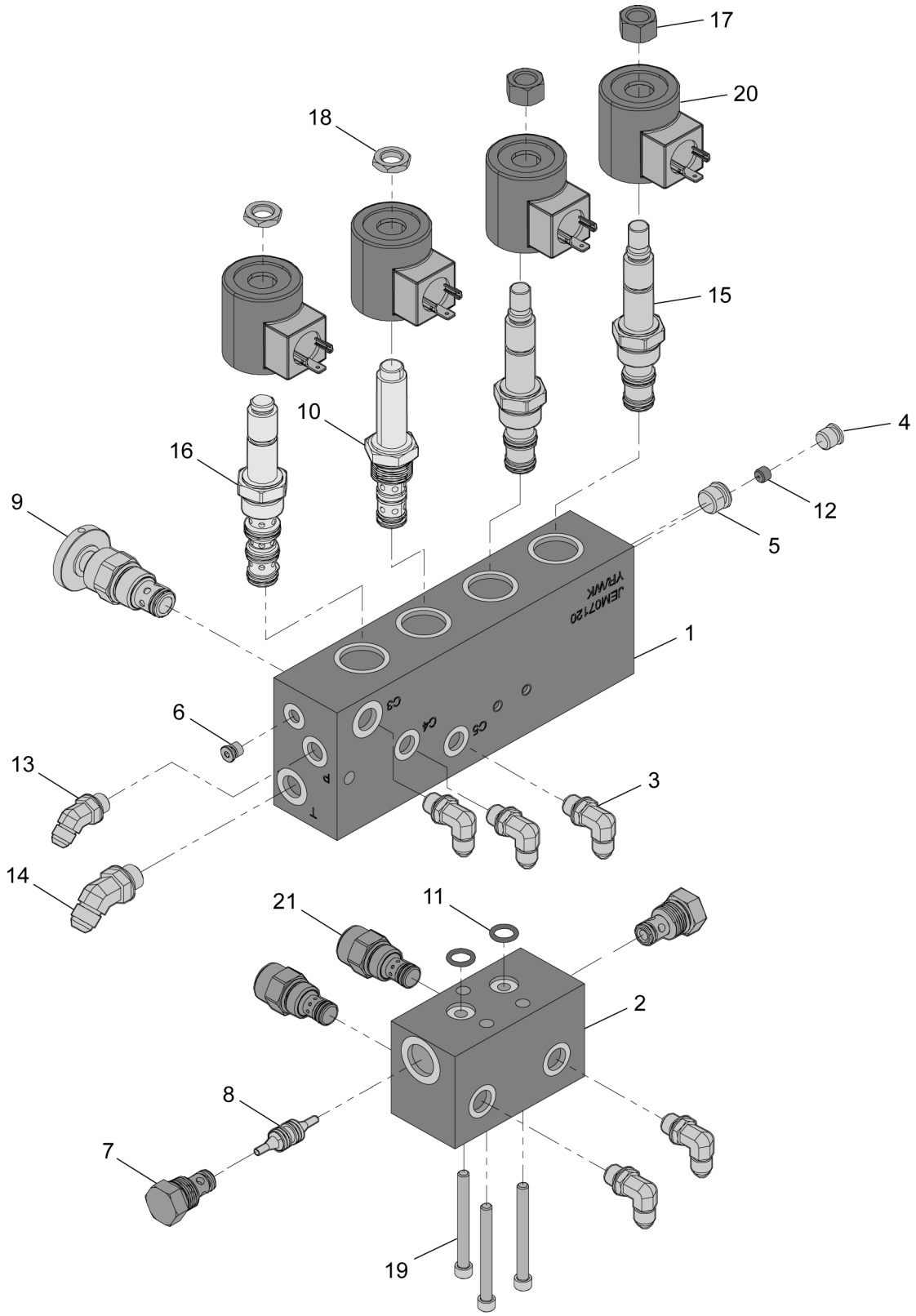

Item	MTM Part No.	Kimble Part No.	Description
	1358237	H10-25500-01	ASSY, CHUTE CONTROL BLOCK, 4 COIL
1	NPN	NPN	MANIFOLD BLOCK
2	NPN	NPN	MANIFOLD BLOCK
3	NPN	NPN	FITTING, 90 DEGREE 4JIC X X4 SAE
4	NPN	NPN	SAE PLUG FITTING
5	NPN	NPN	SAE PLUG FITTING
6	NPN	NPN	SAE PLUG FITTING
7	1329646	H12-25001-00	CHECK VALVE
8	NPN	NPN	PILOT PISTON
9	1329722	H12-23910-00	NEEDLE VALVE
10	1329653	H11-23911-00	SOLENOID VALVE
11	NPN	NPN	O-RING
12	NPN	NPN	ORFICE PLUG
13	NPN	NPN	FITTING
14	NPN	NPN	FITTING
15	1329718	H11-25600-01	SOLENOID OVERRIDE VALVE
16	1329654	H11-2391-00	SOLENOID VALVE
17	NPN	NPN	NUT
18	NPN	NPN	NUT
19	NPN	NPN	BOLT
20	1329558	H80-21521-00	12 VDC COIL
21	1329649	H12-25500-00	PRESSURE REGULATOR

KIMBLE H10-25500-00

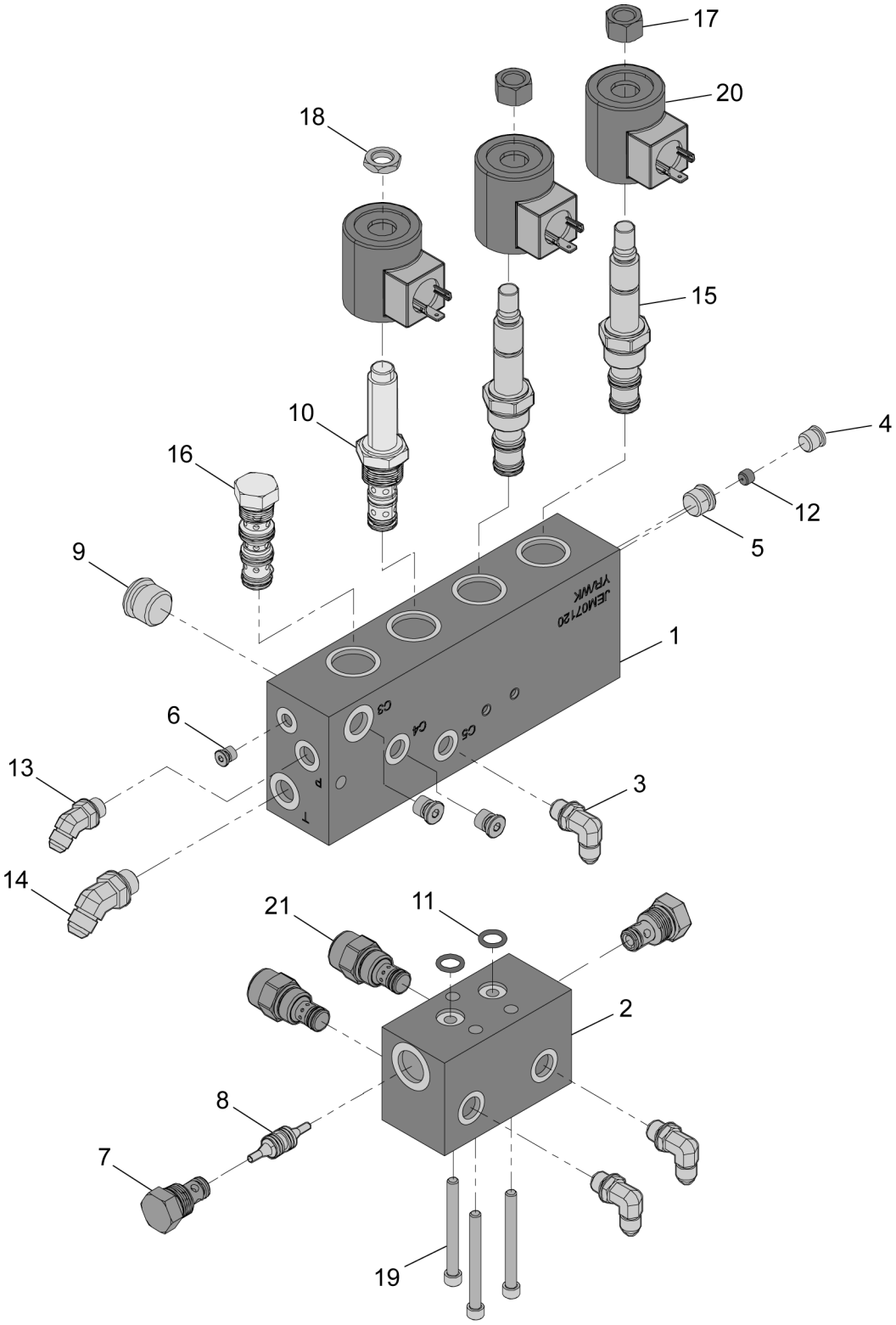

Item	MTM Part No.	Kimble Part No.	Description
	1358238	H10-25500-00	ASSY, CHUTE CONTROL BLOCK, 3 COIL
1	NPN	NPN	MANIFOLD BLOCK
2	NPN	NPN	MANIFOLD BLOCK
3	NPN	NPN	FITTING,90 DEGREE 4JIC X X4 SAE
4	NPN	NPN	SAE PLUG FITTING
5	NPN	NPN	SAE PLUG FITTING
6	NPN	NPN	SAE PLUG FITTING
7	1329646	H12-26000-01	CHECK VALVE
8	NPN	NPN	PILOT PISTON
9	NPN	NPN	SAE PLUG FITTING
10	1329653	H11-23911-00	SOLENOID VALVE
11	NPN	NPN	O-RING
12	NPN	NPN	ORFICE PLUG
13	NPN	NPN	FITTING
14	NPN	NPN	FITTING
15	1329718	H11-23912-00	SOLENOID OVERRIDE VALVE
16	NPN	NPN	CAVITY PLUG
17	NPN	NPN	NUT
18	NPN	NPN	NUT
19	NPN	NPN	BOLT
20	1329558	H80-21521-00	12 VDC COIL
21	1329649	H12-25500-00	PRESSURE REGULATOR

THIS PAGE INTENTIONALLY LEFT BLANK

Filters

20

ADVANCE / TEREX

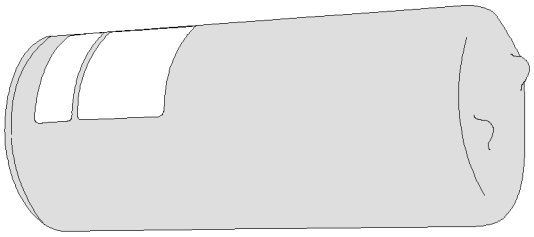

FILTER ASSY - HYDRAULIC, PRESSURE

1134193 MTM 15422 ADV

FILTER ASSY - HYDRAULIC, SUCTION

1134194 MTM 15423 ADV

FILTER ASSY - HYDRAULIC, LENZ

1134195 MTM 15424 ADV

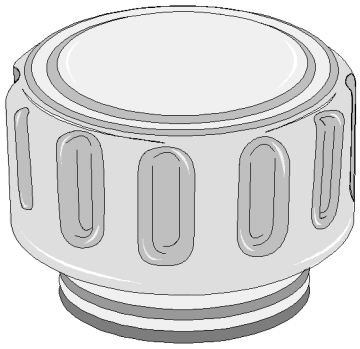

BREATHER - PIPE, RELIEF, 3/4" (5 PSI)

1146611 MTM 16930 ADV

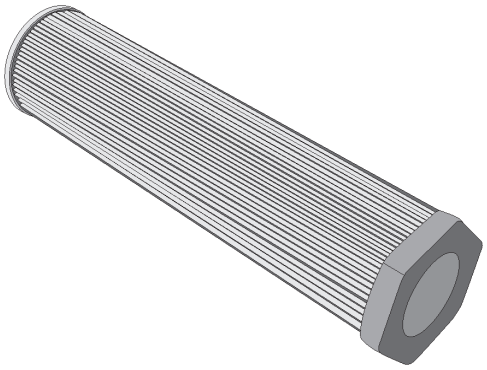

FILTER - HP

1325302 MTM 40454 ADV

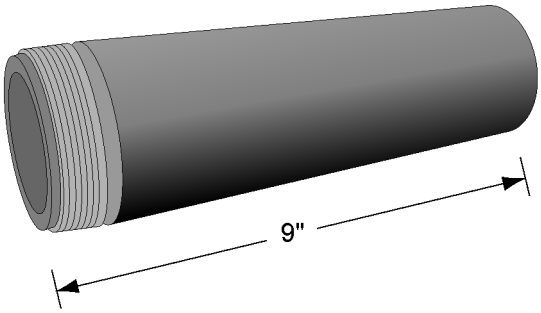

FILTER - CAN ONLY, HP, 15P

0108552 MTM

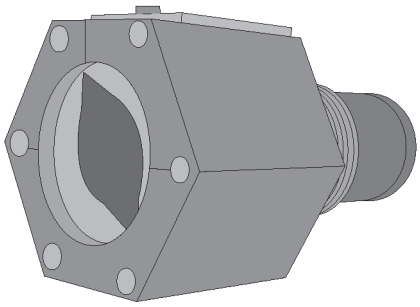

GAUGE - INDICATOR, FILTER

0106555 MTM

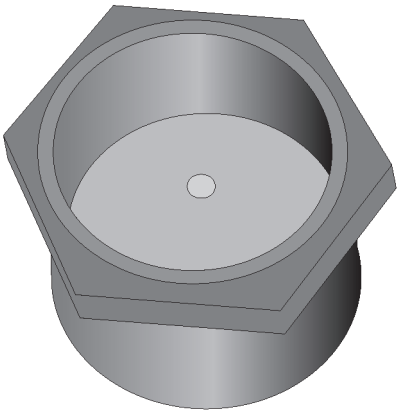

GLASS - OIL SITE, PLUG STYLE

0082023 MTM

CCB

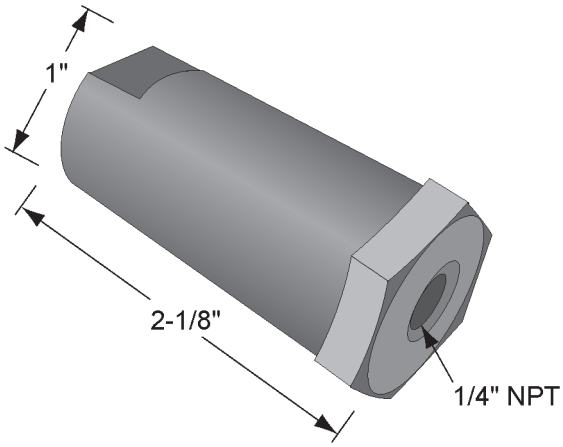

H/P FILTER #6703-2

0012735 MTM 1575967 CCB

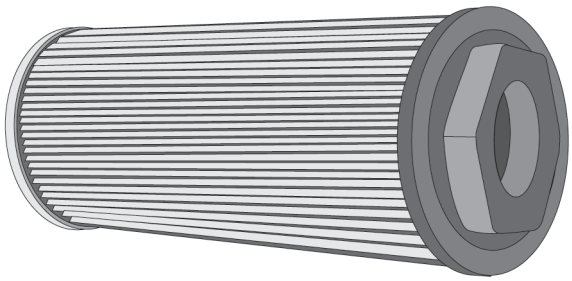

ELEMENT (4987-200M)

0015540 MTM 1571667 CCB

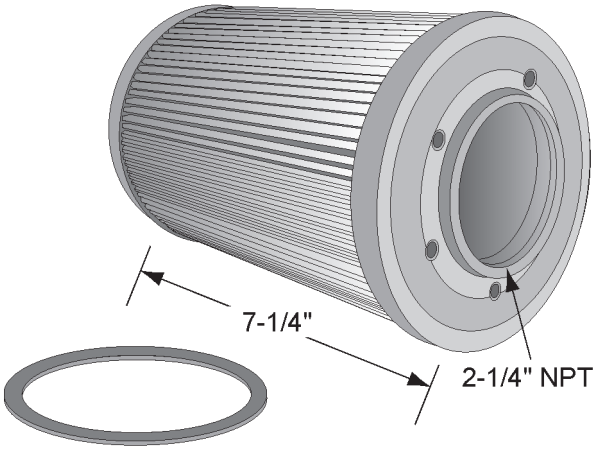

ELEMENT FILTER #1574037

0016824 MTM 1574037 CCB

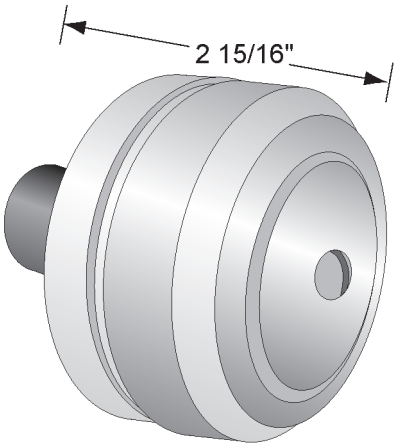

CAP - OIL RESERVOIR

0108555 MTM 1690185 CCB

CAP - OIL RESERVOIR

0016928 MTM 1610257 CCB

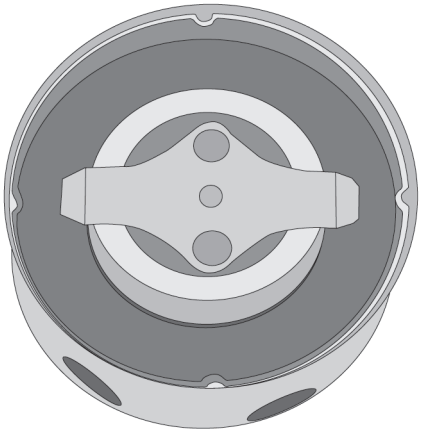

BREATHER - FACIT #572569

0013851 MTM 5050618 CCB

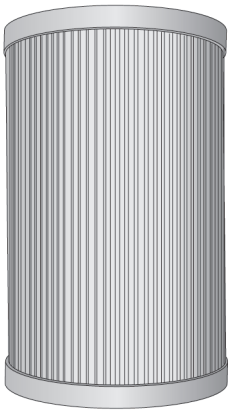

FILTER - BAL #676386-7120

0016507 MTM 1575285 CCB

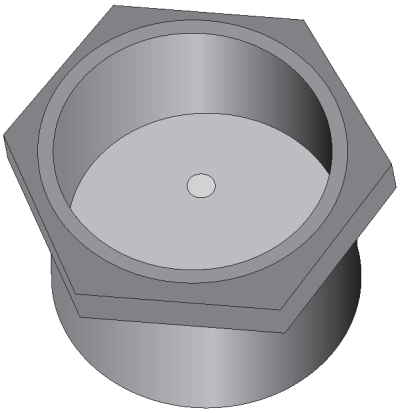

GLASS - OIL SITE, PLUG STYLE

0082023 MTM 1170023 CCB

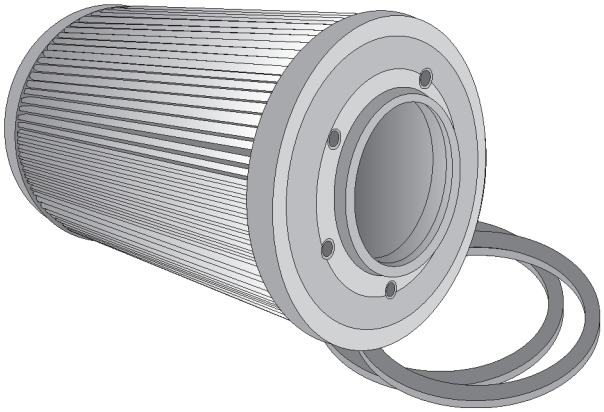

ELEMENT - FILTER

0016506 MTM 1571988 CCB

KIMBLE

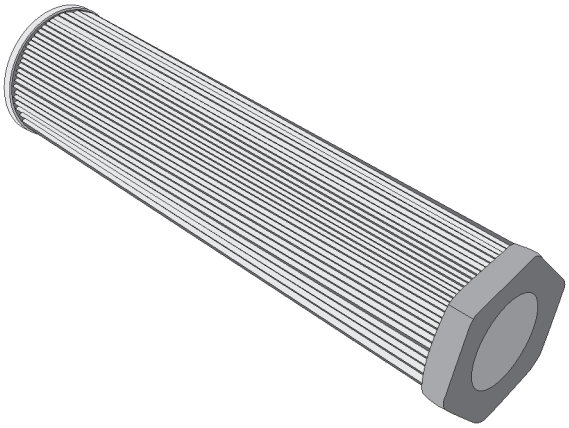

FILTER - HP

1325302 MTM H90-10026-00 KIMBLE

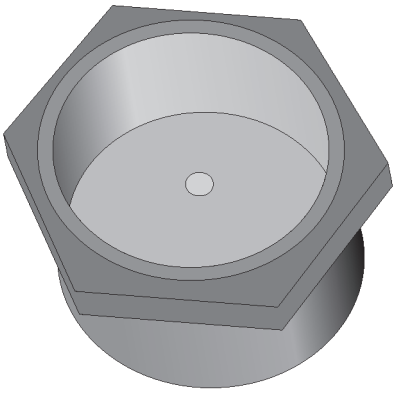

GLASS - SITE GAUGE, RSVR, CHA 1" NPT

0016592 MTM 1170051 CCB

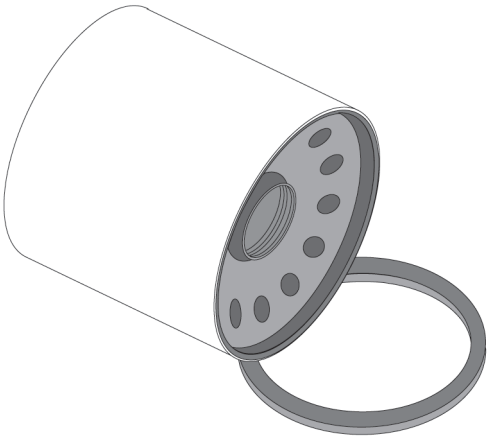

FILTER - SPIN ON

0000436 MTM H90-10012-00 KIMBLE

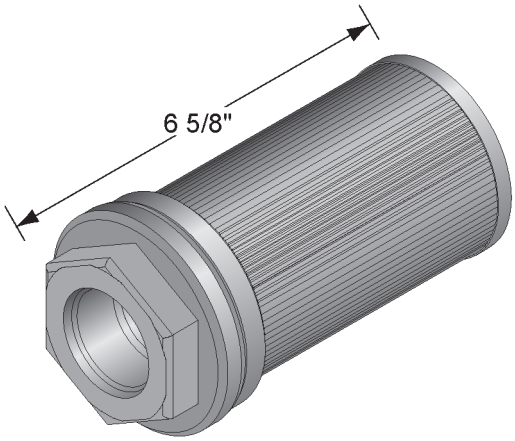

SCREEN - FILTER, 100 MESH

1332288 MTM H90-10021-00 KIMBLE

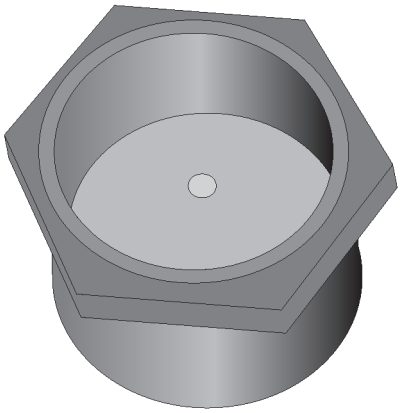

GLASS - OIL SITE, PLUG STYLE

0082023 MTM

MTM

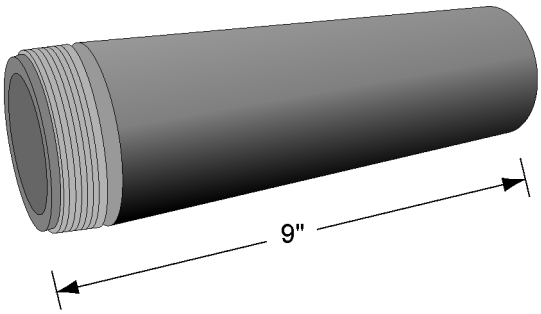

FILTER - CAN ONLY, HP, 15P

0108552 MTM

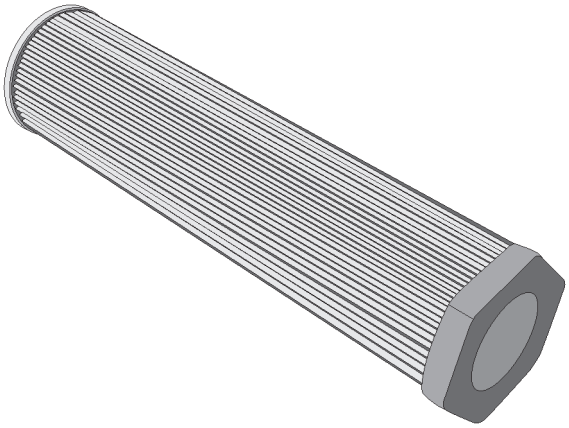

FILTER - HP

1325302 MTM

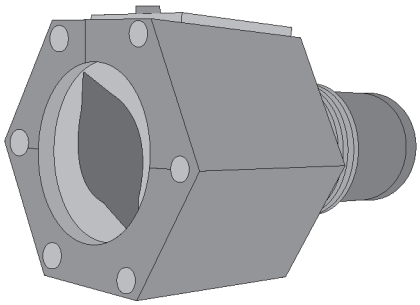

GAUGE - INDICATOR, FILTER

0106555 MTM

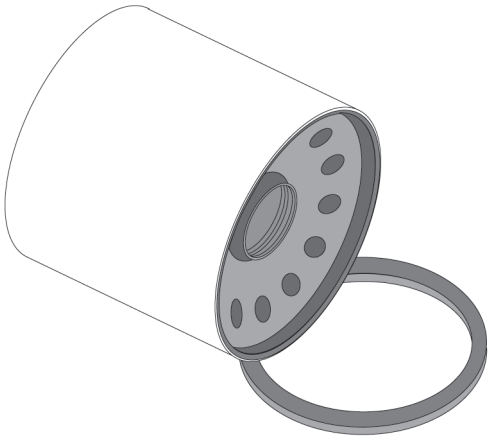

FILTER - SPIN ON, 10 MICRON

0000436 MTM

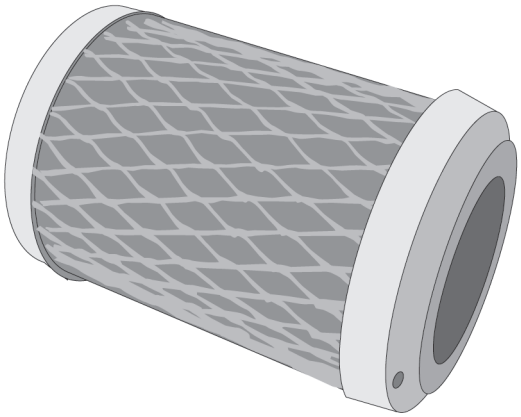

FILTER - COALESCING

0121415 MTM

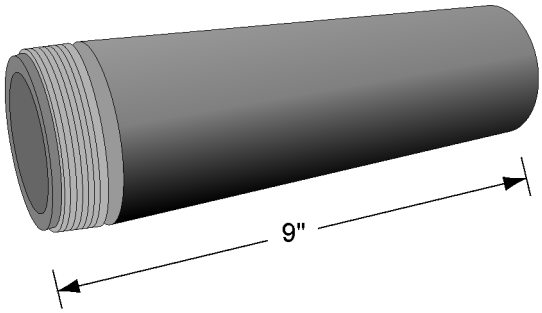

FILTER - CAN ONLY, HP, 15P

0108552 MTM

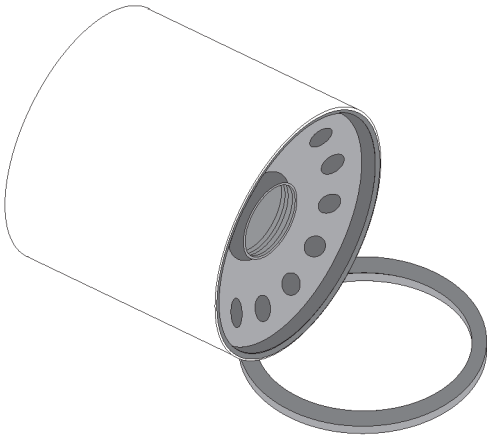

FILTER - SPIN ON, ZINGA, 100 MESH

0000429 MTM

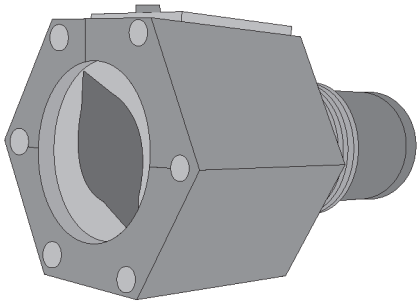

GAUGE - INDICATOR, FILTER

0106555 MTM

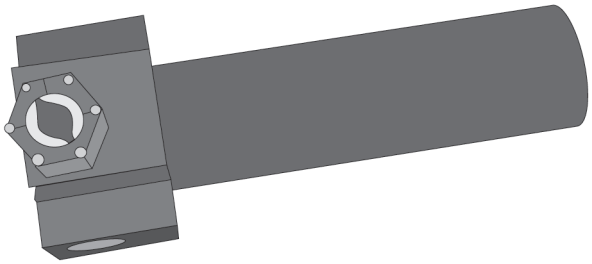

H/P FILTER, COMPLETE ASSY

0108550 MTM

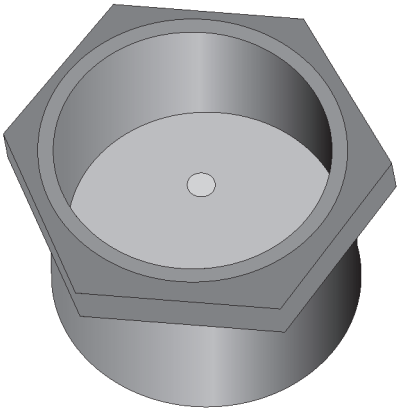

GLASS - OIL SITE, PLUG STYLE

0082023 MTM

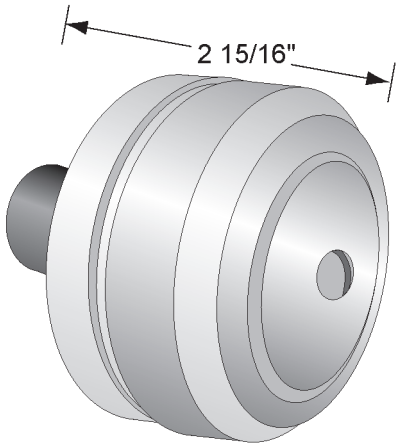

CAP - RESERVOIR

0108555 MTM

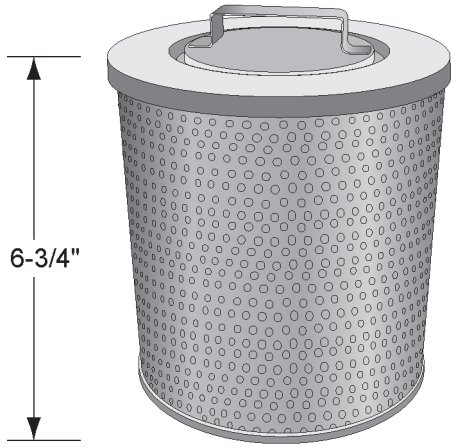

FILTER - DROP IN

0046505 MTM 298-00133-53 REX

REX

No Image Available

FILTER - BREATHER

1112711 MTM 30-06502-68 REX

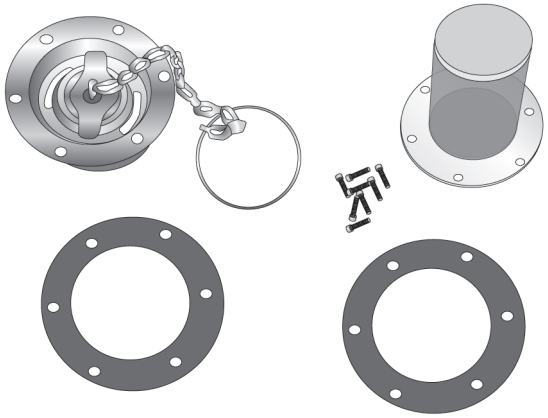

CAP ASSY - FILTER

1255479 MTM 102-05250-10 REX

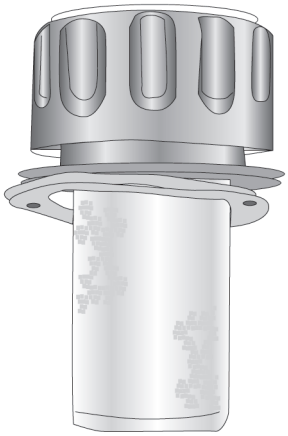

CAP ASSY

1111583 MTM 43822014 REX

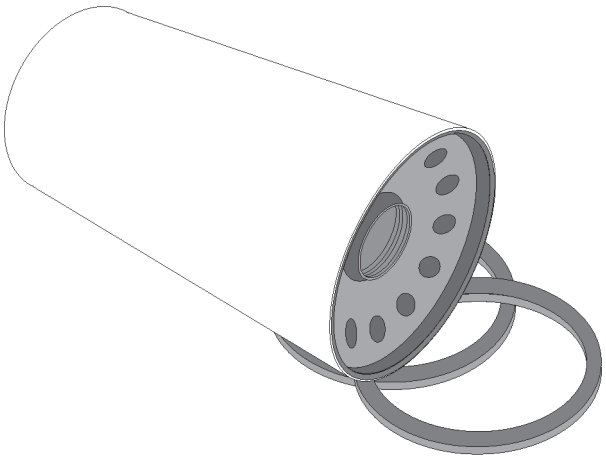

FILTER - 10 MICRON

1114066 MTM 298-00191-53 REX

SCHWING

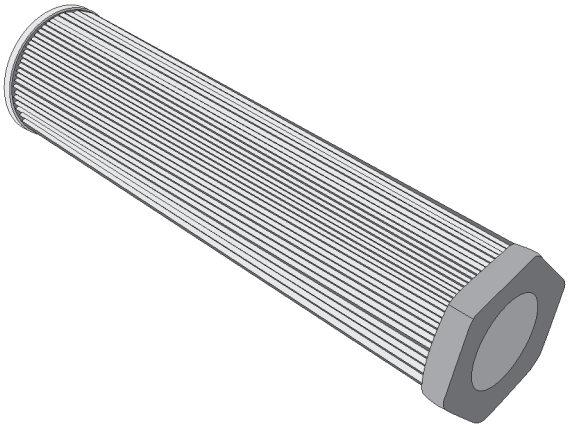

FILTER - HP

1325302 MTM 30389984 SCHWING

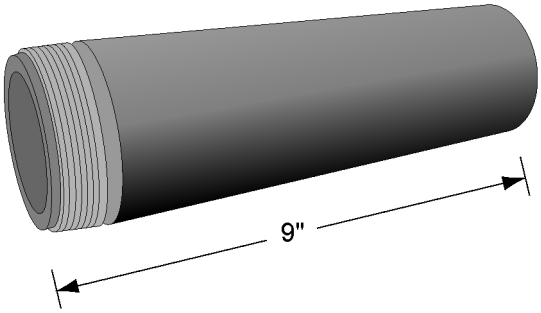

FILTER - CAN ONLY, HP, 15P

0108552 MTM

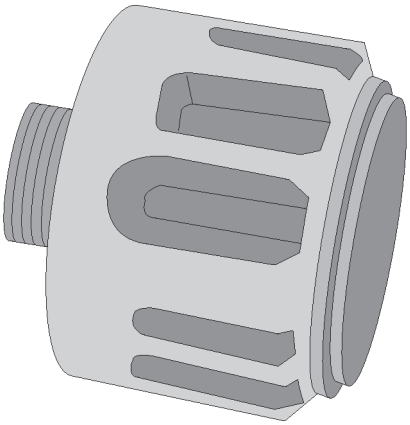

FILTER - HYD BREATHER

1332365 MTM 30389925 SCHWING

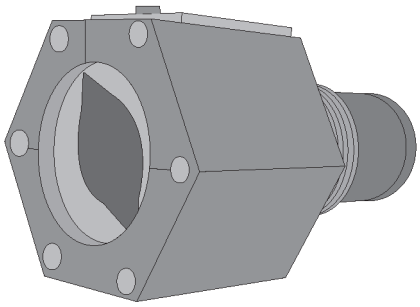

GAUGE - INDICATOR, FILTER

0106555 MTM

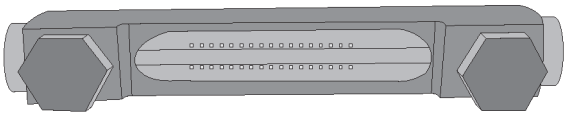

GLASS - SIGHT, HYD W/TEMP

1332406 MTM 30389469 SCHWING

SMITH

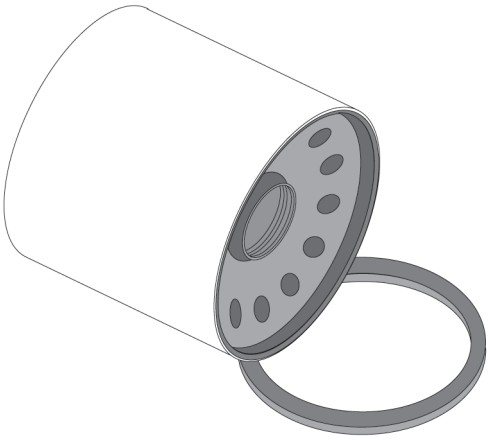

FILTER - SPIN ON

0000436 MTM 6692000 SMITH

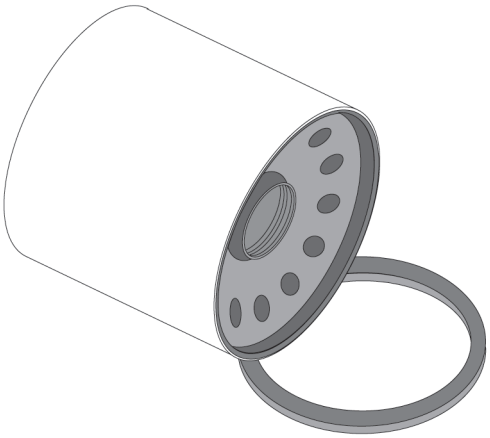

FILTER - HP

1111835 MTM 55000071 SMITH

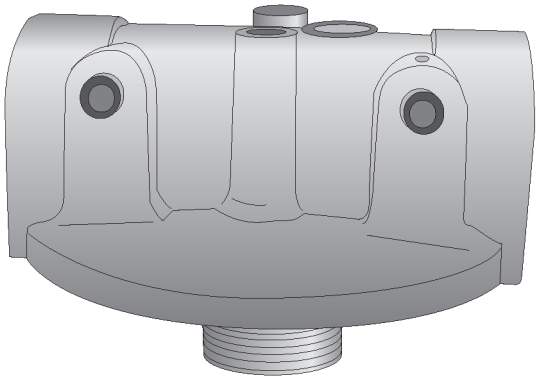

HEAD - SPIN ON

1112200 MTM F4E050CC SMITH

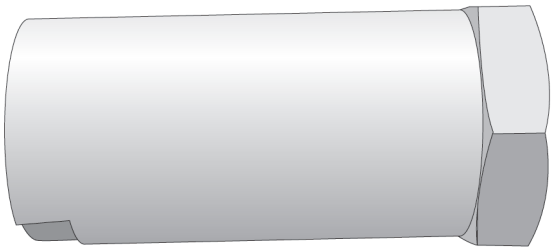

FILTER - IN LINE

1111634 MTM 438580000 SMITH

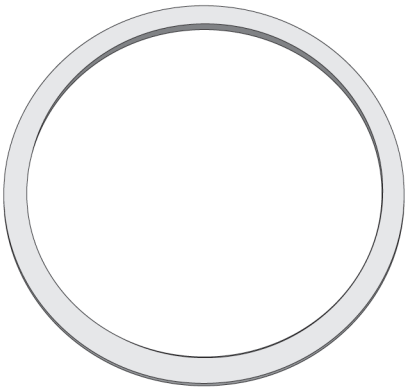

O-RING - SPIN ON

1111970 MTM 6692002 SMITH

THIS PAGE INTENTIONALLY LEFT BLANK

Hydrostatic

EATON STANDARD PUMPS

PUMP - EATON, STD, RH, 5421-486

1167549 MTM NEW	5423-486 EATON
0003212 MTM REMAN	5421-251 EATON

PUMP - EATON, STD, LH, 5421-487

0003213 MTM REMAN	5421-252 EATON

PUMP - EATON, STD, 1.5” SHAFT, RH

0003266 MTM REMAN	5421-554 EATON

PUMP - EATON, STD, LH, 1 1/2” SHAFT

0002571 MTM NEW	5423-482 EATON
0003267 MTM REMAN	5421-555 EATON

EATON A-PAD PUMPS

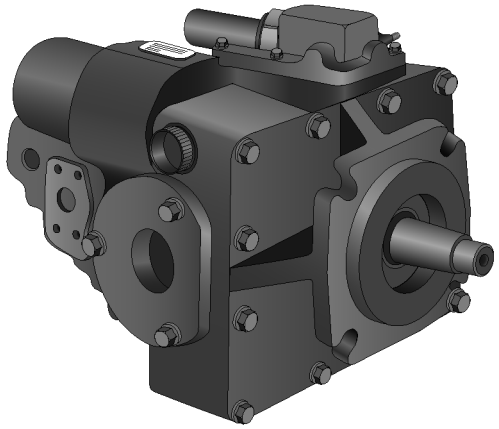

PUMP - RB, A-PAD, 46 SER, LH

0003219 MTM REMAN	4620-098 EATON

PUMP - RB, A-PAD, 54 SER, LH

0003202 MTM REMAN	5420-115 EATON

PUMP - RB, A-PAD, 54 SER, RH

0003201 MTM NEW	5420-125 EATON
0003220 MTM REMAN	4620-147 EATON

PUMP - RB, A-PAD, 54 SER, RH, W/HPRV

1167545 MTM NEW	5421-247 EATON
0003208 MTM REMAN	

PUMP - RB, A-PAD, 54 SER, LH, W/HPRV

1167546 MTM NEW	5421-248 EATON
0003209 MTM REMAN	

PUMP - A-PAD, 1.5” SHAFT, RH

0002566 MTM NEW	5421-550 EATON
0003263 MTM REMAN	

PUMP - A-PAD, 1/2” SHAFT, LH

0002567 MTM NEW	5423-551 EATON
0003263 MTM REMAN	5421-551 EATON

EATON DUAL ELEMENT PUMPS

PUMP - RB CHAL FLO, LH

0003215 MTM REMAN P4605 EATON

PUMP - RB CHAL FLO, RH

0003214 MTM REMAN P4605 EATON

PUMP - RB DE, 54 SER, LH

0003204 MTM REMAN 5420-161 EATON

PUMP - RB DE, 54 SER, RH

0003203 MTM REMAN 5420-162 EATON

PUMP - RB DE, 54 SER, W/HPRV RH

0003210 MTM REMAN 5421-249 EATON

PUMP - RB DE, 54 SER, W/HPRV LH

0003211 MTM REMAN 5421-250 EATON

PUMP

0002553 MTM REMAN 6421-053 EATON

PUMP - DE, 1.5" SHAFT, RH

0003264 MTM REMAN 5421-552 EATON

PUMP - DE, 1.5" SHAFT, LH

0002569 MTM NEW 5421-553 EATON

0003265 MTM REMAN

EATON MOTORS

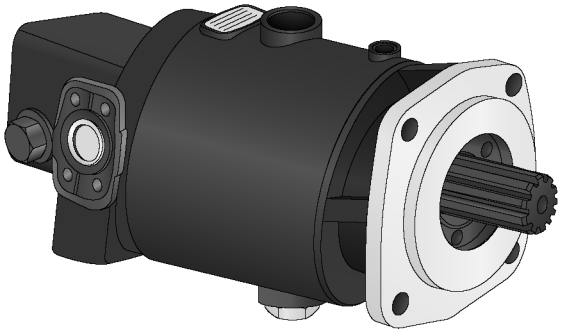

MOTOR - 21 SP, MF4633-094, W/O HPRV

1000126 MTM NEW

0003253 MTM REMAN 4631-047 EATON

MOTOR - 21 SP, MF4633-094, W/O HPRV

1000126 MTM NEW 4631-054 EATON

MOTOR - 21 SP, MF5433-085, W/O HPRV

1000125 MTM NEW 5431-085 EATON

0003257 MTM REMAN

MOTOR - CHAL FLOW, P4605, CCW, LH

0003251 MTM NEW 4630-010 EATON

0003215 MTM REMAN 4620-044 EATON

MOTOR - RB, 46 SER, 21SP, W/HPRV

4631-010 EATON

0003251 MTM REMAN

MOTOR - 21 SP, MF5431-104, 21 SP

5431-024 EATON

1167542 MTM REMAN

SUNSTRAND

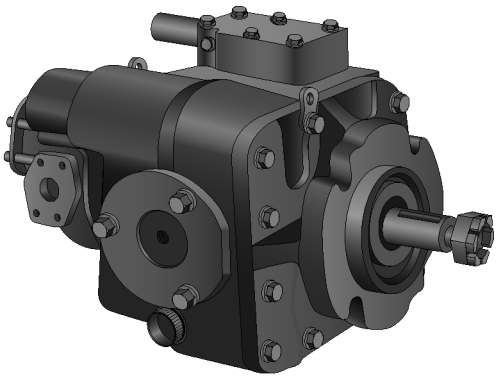

PUMP - RB RV, CCW

0003124 MTM 22-2052 SUNSTRAND

PUMP - RB RV, CW

0003111 MTM 23-2041 SUNSTRAND

PUMP - RB RV, CW

0003112 MTM 23-2084 SUNSTRAND

PUMP - RB RV, RH STANDARD

0003151 MTM 23-2085 SUNSTRAND

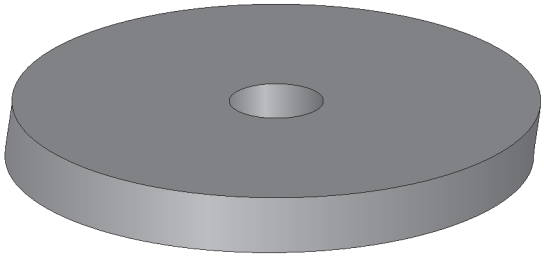

PLUG - ORIFICE, SS

0002268 MTM 9801094 SUNSTRAND

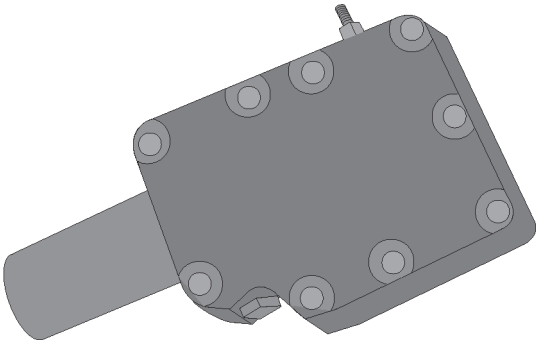

VALVE - CONTROL, SS 9 SERIES

0002243 MTM 9510368-2001 SUNSTRAND

No Image Available

VALVE - CHECK, 10 SERIES, SS

0002245 MTM 9510368-2002 SUNSTRAND

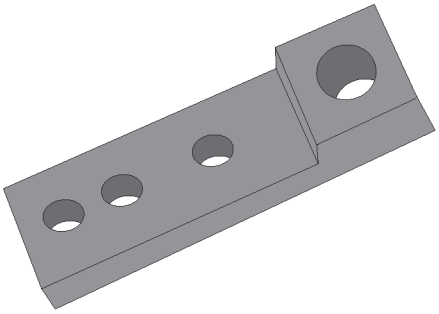

HANDLE - CONTROL /N

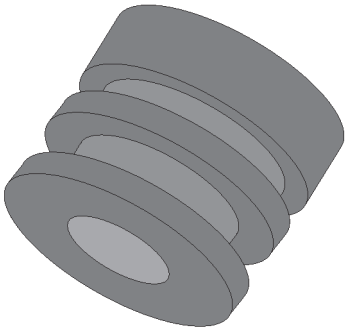

SUN CV - BUSHING # 9800997

0002266 MTM 9800997 SUNSTRAND

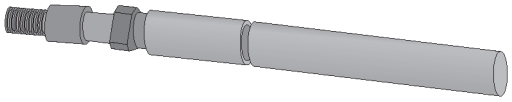

SHAFT - CONTROL, SS

0002257 MTM 9800204 SUNSTRAND

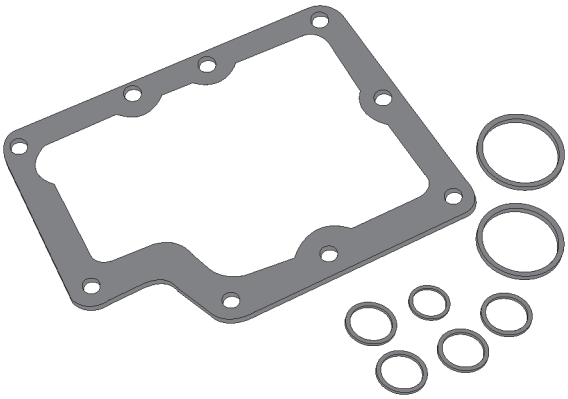

GASKET - CV, KIT, SS

0002228 MTM 9510191 SUNSTRAND

A-PAD PISTON PUMPS

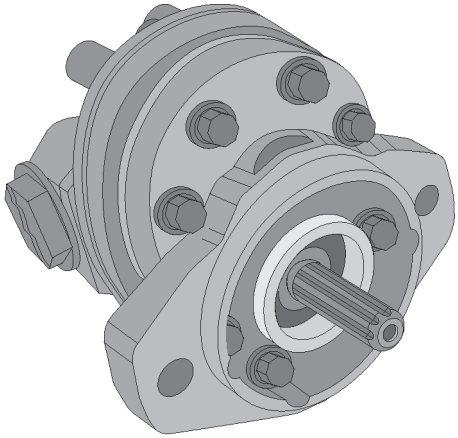

PUMP - GEAR, CES, A/P, A-SP, LH

0107104 MTM 10210200 CBMW

PUMP - GEAR, CES, A/P, A-SP, RH

1167506 MTM 10210300 CBMW

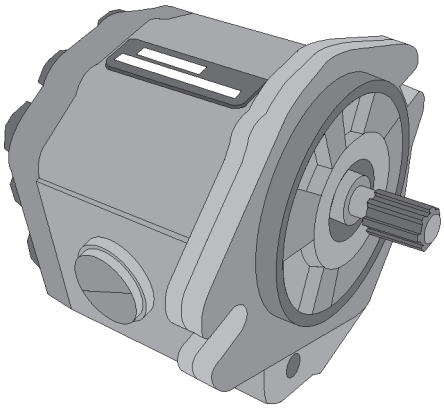

PUMP - LIFT, HYDRAULIC CHUTE, CW

1112753 MTM 102-13080-01 REX

PUMP - PISTON, REX, SUNSTRAND, RH

1144332 MTM 102-11795-01 REX

PUMP - LIFT, HYDRAULIC CHUTE

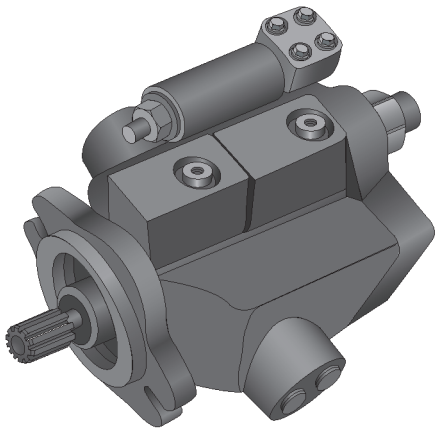

PUMP - PARKER, 5/8 X 9" SHAFT, RH

1483222 MTM

PUMP - PARKER, 5/8 X 9" SHAFT, LH

1167488 MTM

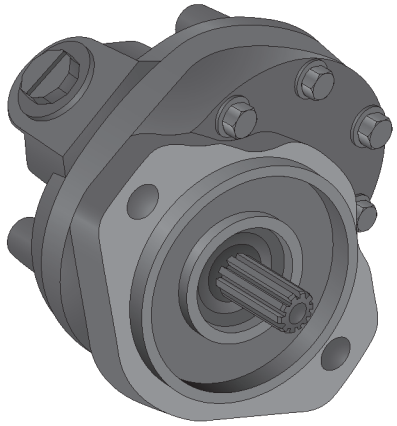

PUMP - PONY, /N, CCW

1112087 MTM 8137000 SMITH

PUMP - PONY, N, CW

1112088 MTM 8137000B SMITH

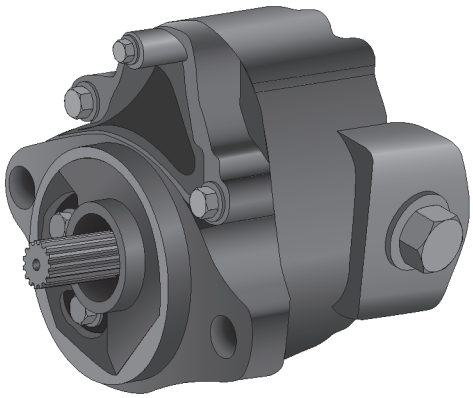

PUMP - BALANCE, CHA, O/S

0016521 MTM 1500163 CCB

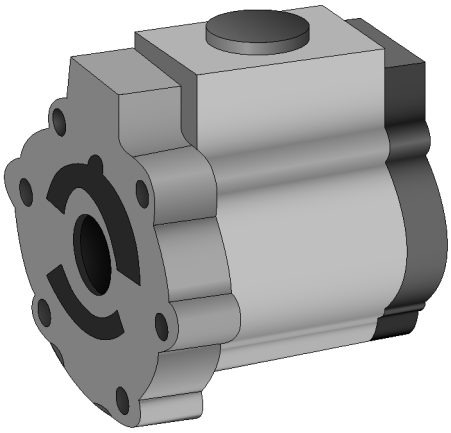

PUMP - BALANCE, DOWTY, CCW, 1.02

0014273 MTM 103454 CCB

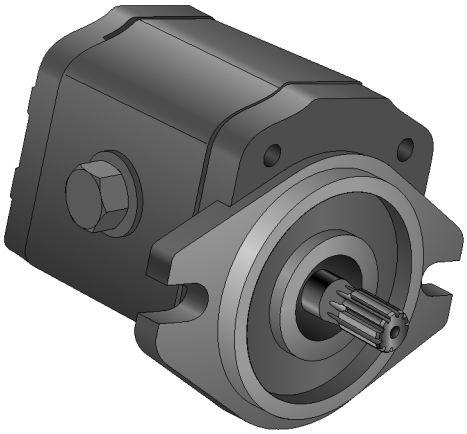

PUMP - GEAR, BOOSTER, RH

1112628 MTM 102-13082-01 REX

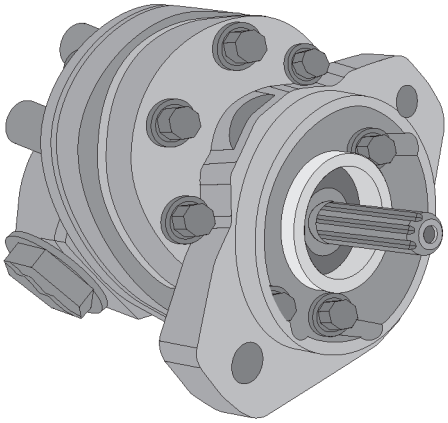

PUMP - "A" PAD, CHUTE CONTROL, CCW

1256091 MTM MA-31737-01 LONDON

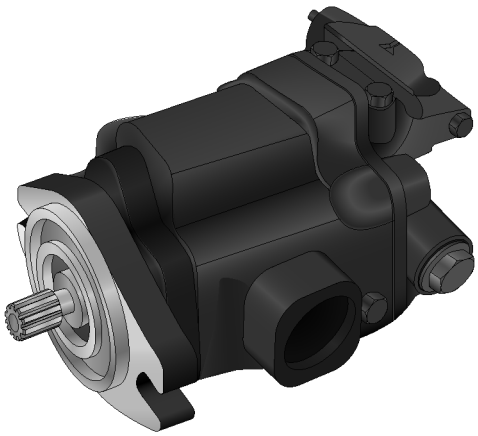

PUMP - BOOSTER, PRES COMP, CCW,

1261126 MTM MA-37731-01 LONDON

PUMP - PRESS COMP BOOSTER, CW

1430186 MTM MA-37731-02 LONDON

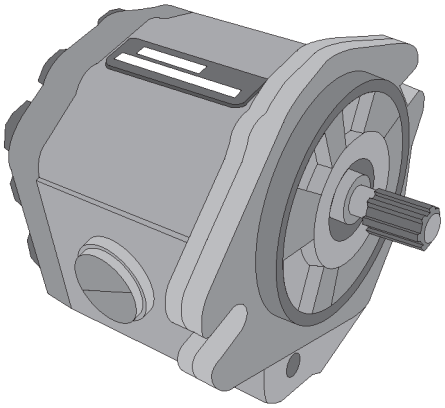

PUMP - GEAR, CHUTE LIFT, LH

1112665 MTM 102-13079-01 REX

PUMP - GEAR, CHUTE LIFT, RH

1112753 MTM 102-13080-01 REX

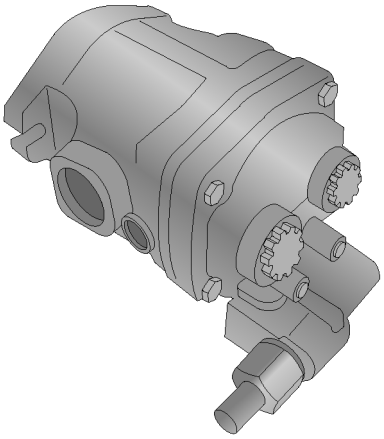

PUMP - CES,PV,5/8X9,LH,PC

1167482 MTM

PUMP - CES,PV,5/8X9,RH,PC

1167483 MTM

PUMP - CES, PV 7/8X13,LH,PC

1167484 MTM

PUMP - CES, PV 7/8X13,RH,PC

1167485 MTM

PUMP - CES, PV 5/8X9,LH,PFC

1167479 MTM

PUMP - CES, PV 5/8X9,RH,PFC

1167480 MTM

PUMP - CES, PV 7/8X13,LH,PFC

1167481 MTM

SEAL KITS & GASKETS

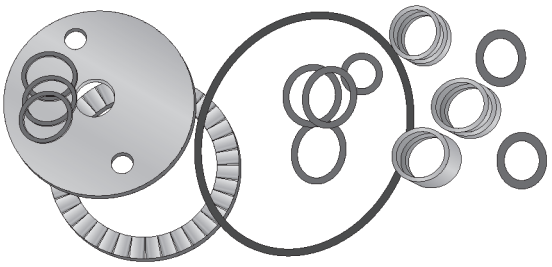

SEAL KIT - PUMP, KD61443R3HC3, BARKSDALE

0001739 MTM

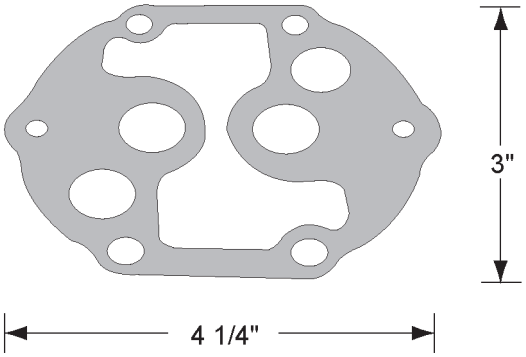

GASKET - PUMP, CHARGE, SS, 9801235

0002269 MTM

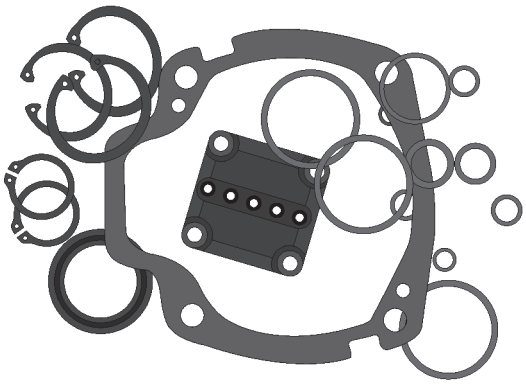

SEAL KIT - PUMP, CES (70122-906)

0002313 MTM

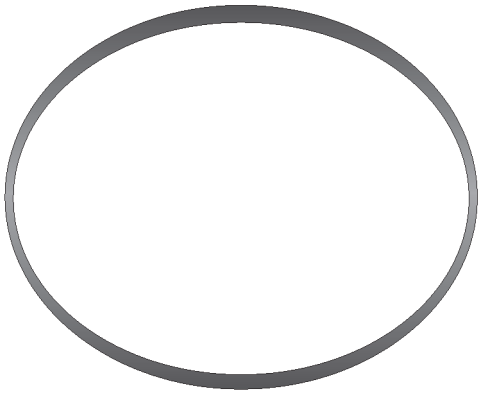

O-RING - SUN, 9004100-1420

0002115 MTM

O-RING - SUN, 9004100-1440

0002113 MTM

O-RING - PUMP, CHARGE SEALING, EATON

0002439 MTM

O-RING, CHA UD 2-248N674-70

0016875 MTM

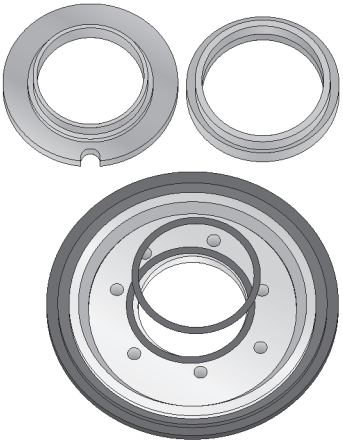

SEAL KIT - PUMP, 9510189, 21 & 22 SER, SS

0002225 MTM

GASKET - SUNSTRAND

1112155 MTM

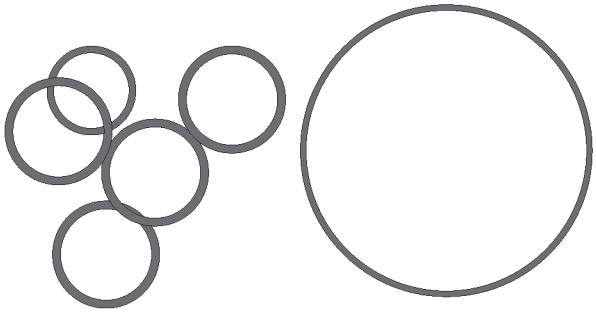

SEAL KIT - EATON, MF BLK

0002457 MTM

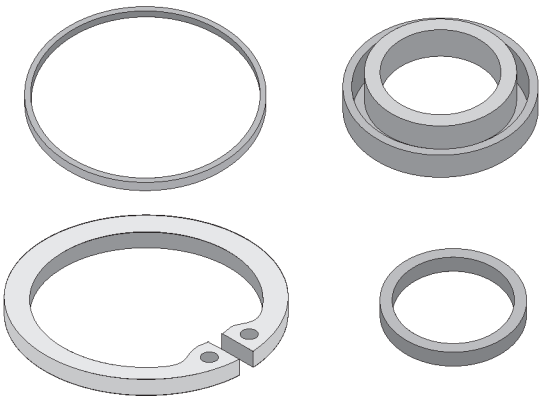

SEAL KIT - PUMP, 9510190, 23 SERIES, SS

2HP105 MTM

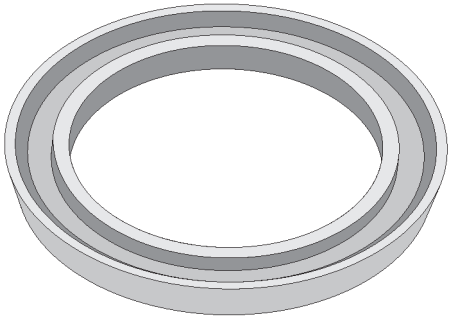

SEAL - EATON, 1.7 A/P

0002438 MTM

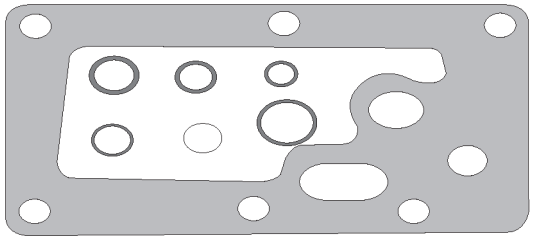

SEAL KIT - PUMP, EATON CV #990287

0002468 MTM

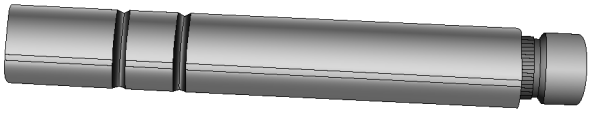

SHAFT - PUMP, CHARGE, A-PAD, 1.28

0002471 MTM

SHAFT - PUMP, CHARGE, A/P CP, EATON N/S, 1.7

0002473 MTM

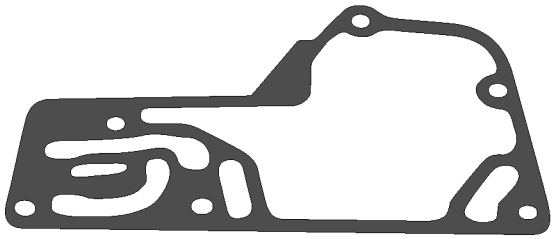

GASKET - DISPLACEMENT, MANUAL

1110567 MTM

SEAL KIT - SHAFT

0002465 MTM

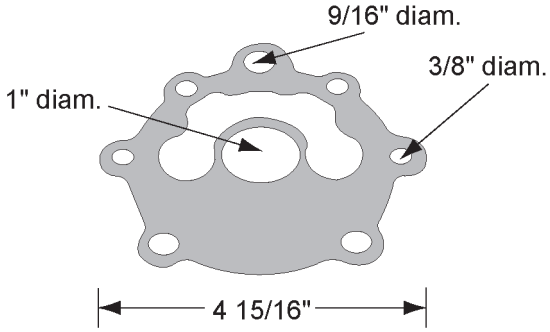

GASKET - PUMP, CHARGE, EATON

1586278 MTM

PTO SHAFT ACCESSORIES

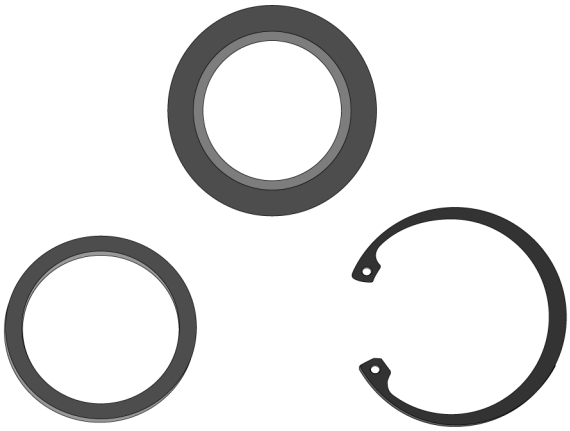

SEAL - SHAFT, LIP STYLE, EATON

0123023 MTM

RING - SNAP, 1350 SERIES

0127502 MTM

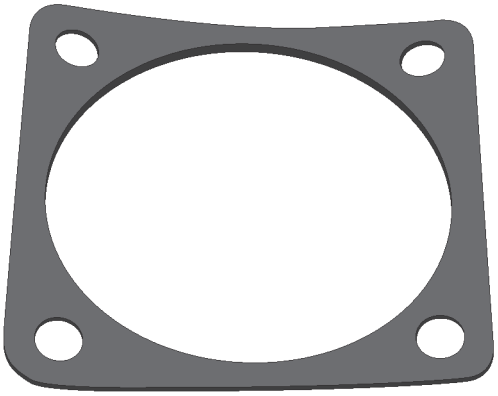

GASKET - MF TO ZF

0002000 MTM

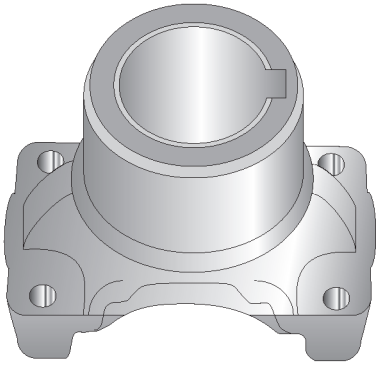

SHAFT - YOKE, TAPER, 1350 SERIES PUMP, 1-1/2"TAPER

0127504 MTM

SEAL - SHAFT, INPUT, SS 90 SERIES

1110787 MTM

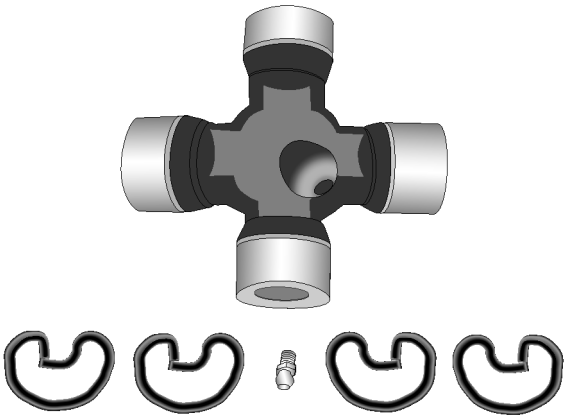

U-JOINT, 1310/1350 SERIES

0127510 MTM

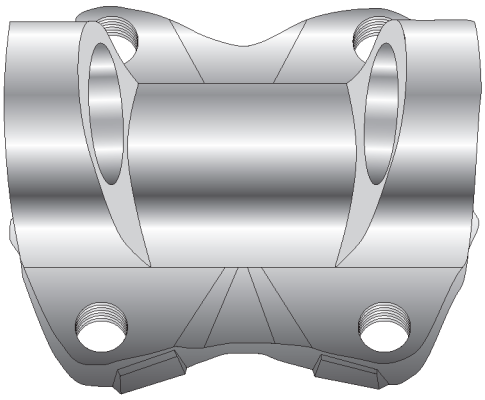

1350 SERIES LG FLANGE - YOKE

0127503 MTM

U-BOLT KIT - W/NUTS, 1350 SERIES

0127501 MTM

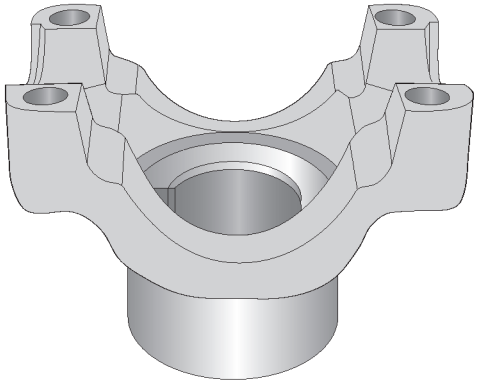

SHAFT - YOKE, 1350 PTO SERIES PUMP, 1-1/4" TAPER

0127505 MTM

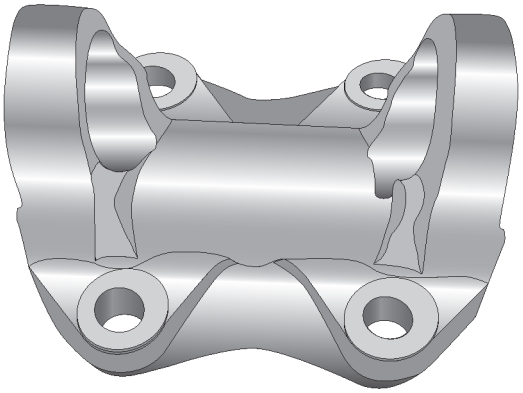

FLANGE - YOKE, LARGE 1310 SERIES

0000704 MTM

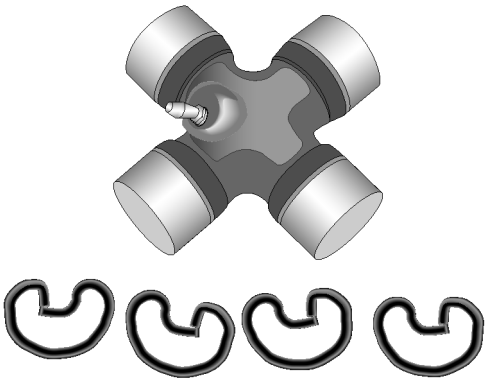

U-JOINT, 1350 SERIES

0000760 MTM

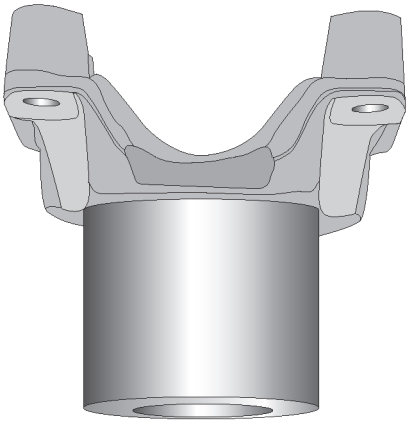

YOKE - PUMP, TORQUE TO 425 FT. LB 1310 SERIES

0000700 MTM

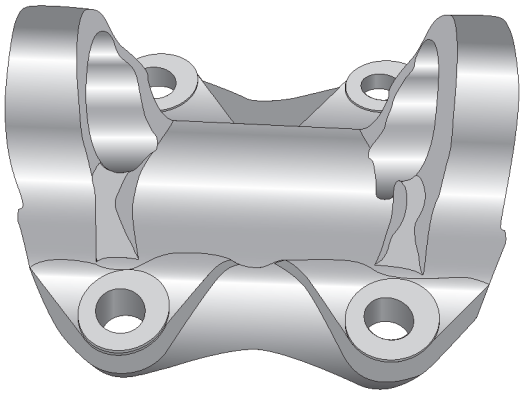

FLANGE - YOKE, SMALL, 1310 SERIES

0000703 MTM

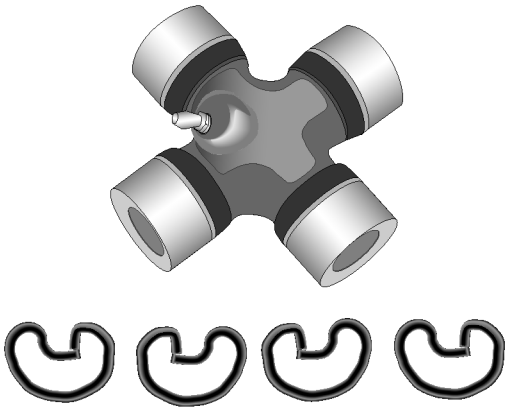

U-JOINT - W/RETAINER SNAP RINGS, 1310 SERIES

0000702 MTM

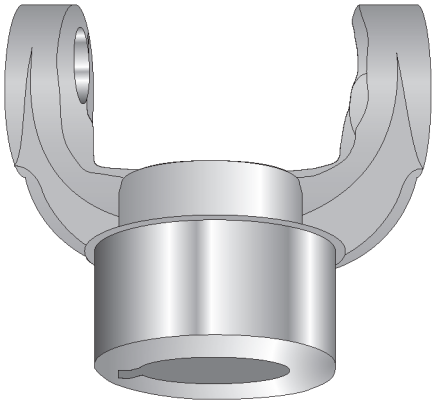

YOKE - KEYED, 1.25" SHAFT, 1310 SERIES

0013692 MTM

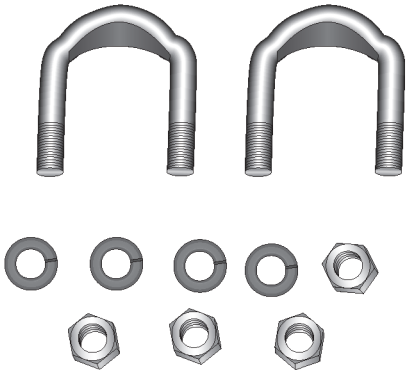

U-BOLTS - W/NUTS 1310 SERIES

0000701 MTM

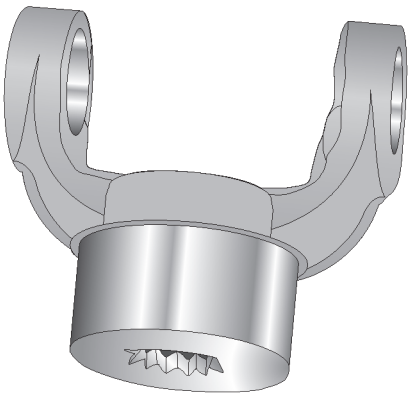

YOKE - PUMP, 7/8" X 13 SPLINE 1310 SERIES

0127053 MTM

RING - SNAP, U-JOINT, 1310 SERIES

0115705 MTM

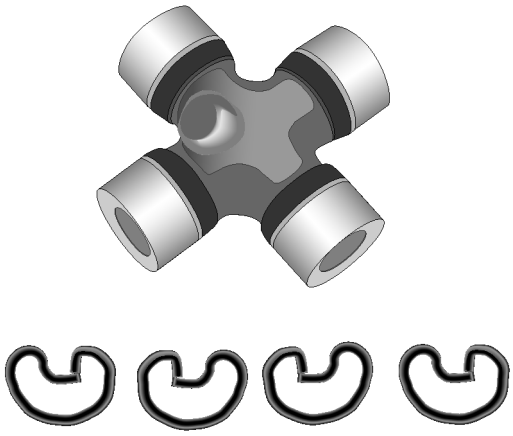

U-JOINT - 1350 NON-GREASE

1105072 MTM

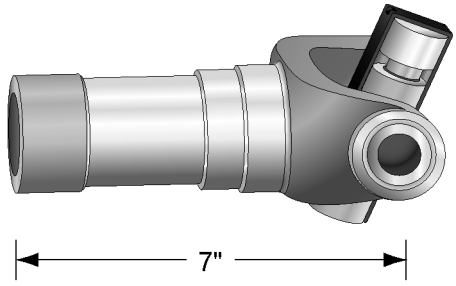

YOKE - SLIP, LG, 1350, W/JOINT

1148594 MTM

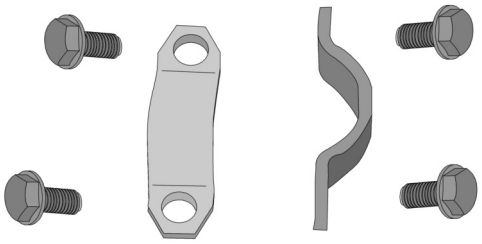

STRAP KIT - PTO, 2-STR/4-BLT, 1350

3324982 MTM

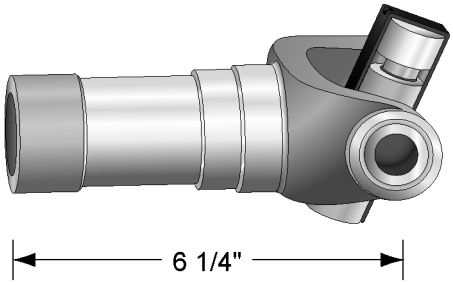

YOKE - SLIP, SH, 1350, W/JOINT

1148595 MTM

YOKE - SLIP, STD,1350 NO JOINT

1148596 MTM

PTO SHAFTS

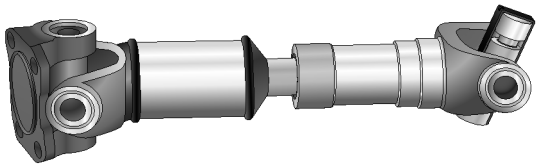

1350 SERIES DRIVESHAFTS W/ 2.00 TUBING AND DAMPNERS

1148597	PSHAFT-2.00X6.00X2.50
1148598	PSHAFT-2.00X7.00X2.50
1148599	PSHAFT-2.00X8.00X2.50
1510677	PSHAFT-2.00X9.00X2.50
1510679	PSHAFT-2.00X10.00X2.50
1148602	PSHAFT-2.00X10.50X2.50
1510681	PSHAFT-2.00X11.00X2.50
1509881	PSHAFT-2.00X12.00X2.50
1509901	PSHAFT-2.00X13.00X2.50
1509888	PSHAFT-2.00X14.00X2.50
1509882	PSHAFT-2.00X15.00X2.50
1509898	PSHAFT-2.00X16.00X2.50
1509880	PSHAFT-2.00X17.00X2.50
1509883	PSHAFT-2.00X18.00X2.50
1509885	PSHAFT-2.00X19.00X2.50
1508627	PSHAFT-2.00X20.00X2.50
1510536	PSHAFT-2.00X21.00X2.50
1510685	PSHAFT-2.00X22.00X2.50
1513432	PSHAFT-2.00X23.00X2.50
1514635	PSHAFT-2.00X24.00X2.50
1148617	PSHAFT-2.00X25.00X2.50
1148618	PSHAFT-2.00X26.00X2.50
1509899	PSHAFT-2.00X27.00X2.50
1514643	PSHAFT-2.00X28.00X2.50
1510687	PSHAFT-2.00X29.00X2.50
1520547	PSHAFT-2.00X30.00X2.50
1514649	PSHAFT-2.00X31.00X2.50
1528483	PSHAFT-2.00X32.00X2.50
1508625	PSHAFT-2.00X33.00X2.50
1148627	PSHAFT-2.00X34.00X2.50
1148628	PSHAFT-2.00X35.00X2.50
1509894	PSHAFT-2.00X36.00X2.50
1510689	PSHAFT-2.00X37.00X2.50
1510691	PSHAFT-2.00X38.00X2.50
1510693	PSHAFT-2.00X39.00X2.50
1510695	PSHAFT-2.00X40.00X2.50
1508569	PSHAFT-2.00X41.00X2.50
1510722	PSHAFT-2.00X42.00X2.50
1508573	PSHAFT-2.00X43.00X2.50
1508577	PSHAFT-2.00X44.00X2.50
1508581	PSHAFT-2.00X45.00X2.50
1508602	PSHAFT-2.00X46.00X2.50
1508585	PSHAFT-2.00X47.00X2.50
1508589	PSHAFT-2.00X48.00X2.50
1508629	PSHAFT-2.00X49.00X2.50
1508593	PSHAFT-2.00X50.00X2.50
1148644	PSHAFT-2.00X51.00X2.50
1148645	PSHAFT-2.00X52.00X2.50
1148646	PSHAFT-2.00X53.00X2.50
1148647	PSHAFT-2.00X54.00X2.50

1350 SERIES DRIVESHAFTS W/ 2.50 TUBING AND DAMPNERS

1510682	PSHAFT-2.50X11.00X2.50
1514728	PSHAFT-2.50X12.00X2.50
1509920	PSHAFT-2.50X13.00X2.50
1509889	PSHAFT-2.50X14.00X2.50
1148652	PSHAFT-2.50X15.00X2.50
1148653	PSHAFT-2.50X16.00X2.50
1509916	PSHAFT-2.50X17.00X2.50
1148655	PSHAFT-2.50X18.00X2.50
1148656	PSHAFT-2.50X19.00X2.50
1508628	PSHAFT-2.50X20.00X2.50
1148658	PSHAFT-2.50X21.00X2.50
1510686	PSHAFT-2.50X22.00X2.50
1148660	PSHAFT-2.50X23.00X2.50
1148661	PSHAFT-2.50X24.00X2.50
1148662	PSHAFT-2.50X25.00X2.50
1148663	PSHAFT-2.50X26.00X2.50

1509900	PSHAFT-2.50X27.00X2.50
1148665	PSHAFT-2.50X28.00X2.50
1510688	PSHAFT-2.50X29.00X2.50
1148667	PSHAFT-2.50X30.00X2.50
1148668	PSHAFT-2.50X31.00X2.50
1148670	PSHAFT-2.50X32.00X2.50
1508626	PSHAFT-2.50X33.00X2.50
1148673	PSHAFT-2.50X34.00X2.50
1148674	PSHAFT-2.50X35.00X2.50
1509895	PSHAFT-2.50X36.00X2.50
1510690	PSHAFT-2.50X37.00X2.50
1510692	PSHAFT-2.50X38.00X2.50
1510694	PSHAFT-2.50X39.00X2.50
1510696	PSHAFT-2.50X40.00X2.50
1508570	PSHAFT-2.50X41.00X2.50
1510721	PSHAFT-2.50X42.00X2.50
1508574	PSHAFT-2.50X43.00X2.50
1508578	PSHAFT-2.50X44.00X2.50
1508582	PSHAFT-2.50X45.00X2.50
1508603	PSHAFT-2.50X46.00X2.50
1508586	PSHAFT-2.50X47.00X2.50
1508590	PSHAFT-2.50X48.00X2.50
1508630	PSHAFT-2.50X49.00X2.50
1508594	PSHAFT-2.50X50.00X2.50
1508599	PSHAFT-2.50X51.00X2.50
1509887	PSHAFT-2.50X52.00X2.50
1509897	PSHAFT-2.50X53.00X2.50
1148700	PSHAFT-2.50X54.00X2.50

1310 SERIES DRIVESHAFTS/SHORT COUPLED

0000707	PSHAFT-2.00X7.00X2.50
0000708	PSHAFT-2.00X8.00X2.50
0000709	PSHAFT-2.00X9.00X2.50

1310 SERIES DRIVESHAFT/2.00 TUBING

0000710	PSHAFT-2.00X10.00X2.50
0000711	PSHAFT-2.00X11.00X2.50
0000712	PSHAFT-2.00X12.00X2.50
0000713	PSHAFT-2.00X13.00X2.50
0000714	PSHAFT-2.00X14.00X2.50
0000715	PSHAFT-2.00X15.00X2.50
0000716	PSHAFT-2.00X16.00X2.50
0000717	PSHAFT-2.00X17.00X2.50
0000718	PSHAFT-2.00X18.00X2.50
0000719	PSHAFT-2.00X19.00X2.50
0000720	PSHAFT-2.00X20.00X2.50
0000721	PSHAFT-2.00X21.00X2.50
0000722	PSHAFT-2.00X22.00X2.50
0000723	PSHAFT-2.00X23.00X2.50
0000724	PSHAFT-2.00X24.00X2.50
0000725	PSHAFT-2.00X25.00X2.50
0000726	PSHAFT-2.00X26.00X2.50
0000727	PSHAFT-2.00X27.00X2.50
1509862	PSHAFT-2.00X28.00X2.50
0000729	PSHAFT-2.00X29.00X2.50
0000730	PSHAFT-2.00X30.00X2.50
0000731	PSHAFT-2.00X31.00X2.50
0000732	PSHAFT-2.00X32.00X2.50
0000733	PSHAFT-2.00X33.00X2.50
0000734	PSHAFT-2.00X34.00X2.50
0000735	PSHAFT-2.00X35.00X2.50
0000736	PSHAFT-2.00X36.00X2.50
0000737	PSHAFT-2.00X37.00X2.50
0000738	PSHAFT-2.00X38.00X2.50
0000739	PSHAFT-2.00X39.00X2.50
0000740	PSHAFT-2.00X40.00X2.50
0000741	PSHAFT-2.00X41.00X2.50
0000742	PSHAFT-2.00X42.00X2.50
0000743	PSHAFT-2.00X43.00X2.50
0000744	PSHAFT-2.00X44.00X2.50
0000745	PSHAFT-2.00X45.00X2.50
0000746	PSHAFT-2.00X46.00X2.50
0000747	PSHAFT-2.00X47.00X2.50
0000748	PSHAFT-2.00X48.00X2.50
0000749	PSHAFT-2.00X49.00X2.50
0000750	PSHAFT-2.00X50.00X2.50
0000751	PSHAFT-2.00X51.00X2.50
0000752	PSHAFT-2.00X52.00X2.50
0000753	PSHAFT-2.00X53.00X2.50
0000754	PSHAFT-2.00X54.00X2.50

1310 SERIES DRIVESHAFTS/2.50-083 TUBING WITH DAMPNERS

1148754	PSHAFT-2.50X11.00X2.50
1148756	PSHAFT-2.50X12.00X2.50
1148757	PSHAFT-2.50X13.00X2.50
1148758	PSHAFT-2.50X14.00X2.50
1148759	PSHAFT-2.50X15.00X2.50
1148761	PSHAFT-2.50X16.00X2.50
1148762	PSHAFT-2.50X17.00X2.50
1148763	PSHAFT-2.50X18.00X2.50
1148765	PSHAFT-2.50X19.00X2.50
1148767	PSHAFT-2.50X20.00X2.50
1148769	PSHAFT-2.50X21.00X2.50
1148770	PSHAFT-2.50X22.00X2.50
1148772	PSHAFT-2.50X23.00X2.50
1148775	PSHAFT-2.50X24.00X2.50
1148776	PSHAFT-2.50X25.00X2.50
1148777	PSHAFT-2.50X26.00X2.50
1148778	PSHAFT-2.50X27.00X2.50
1148779	PSHAFT-2.50X28.00X2.50
1148780	PSHAFT-2.50X29.00X2.50
1148781	PSHAFT-2.50X30.00X2.50
1148782	PSHAFT-2.50X31.00X2.50
1148783	PSHAFT-2.50X32.00X2.50
1148784	PSHAFT-2.50X33.00X2.50
1148785	PSHAFT-2.50X34.00X2.50
1148786	PSHAFT-2.50X35.00X2.50
1148787	PSHAFT-2.50X36.00X2.50
1148788	PSHAFT-2.50X37.00X2.50
1148789	PSHAFT-2.50X38.00X2.50
1148790	PSHAFT-2.50X39.00X2.50
1148791	PSHAFT-2.50X40.00X2.50
1148792	PSHAFT-2.50X41.00X2.50
1148793	PSHAFT-2.50X42.00X2.50
1148794	PSHAFT-2.50X43.00X2.50
1148795	PSHAFT-2.50X44.00X2.50
1148796	PSHAFT-2.50X45.00X2.50
1148797	PSHAFT-2.50X46.00X2.50
1148798	PSHAFT-2.50X47.00X2.50
1148799	PSHAFT-2.50X48.00X2.50
1148800	PSHAFT-2.50X49.00X2.50
1148801	PSHAFT-2.50X50.00X2.50
1148802	PSHAFT-2.50X51.00X2.50
1148803	PSHAFT-2.50X52.00X2.50
1148804	PSHAFT-2.50X53.00X2.50
1148805	PSHAFT-2.50X54.00X2.50
1148806	PSHAFT-2.50X55.00X2.50
1148807	PSHAFT-2.50X56.00X2.50
1148808	PSHAFT-2.50X57.00X2.50
1148809	PSHAFT-2.50X58.00X2.50

1310 SERIES DRIVESHAFTS/2.00 TUBING WITH NON-GREASEABLE UNIVERSAL JOINTS

1148814	PSHAFT-2.00X10.00X2.50
1148815	PSHAFT-2.00X11.00X2.50
1148816	PSHAFT-2.00X12.00X2.50
1148817	PSHAFT-2.00X13.00X2.50
1148818	PSHAFT-2.00X14.00X2.50
1148819	PSHAFT-2.00X15.00X2.50
0000716	PSHAFT-2.00X16.00X2.50
1148821	PSHAFT-2.00X17.00X2.50
1148822	PSHAFT-2.00X18.00X2.50
1148823	PSHAFT-2.00X19.00X2.50
1148824	PSHAFT-2.00X20.00X2.50
1148825	PSHAFT-2.00X21.00X2.50
1148826	PSHAFT-2.00X22.00X2.50
1148827	PSHAFT-2.00X23.00X2.50
1148828	PSHAFT-2.00X24.00X2.50
1148829	PSHAFT-2.00X25.00X2.50
1148830	PSHAFT-2.00X26.00X2.50
1148831	PSHAFT-2.00X27.00X2.50
1148832	PSHAFT-2.00X28.00X2.50
1148833	PSHAFT-2.00X29.00X2.50
1148834	PSHAFT-2.00X30.00X2.50
1148835	PSHAFT-2.00X31.00X2.50
1148836	PSHAFT-2.00X32.00X2.50
1148837	PSHAFT-2.00X33.00X2.50
1148838	PSHAFT-2.00X34.00X2.50
1148839	PSHAFT-2.00X35.00X2.50
1148840	PSHAFT-2.00X36.00X2.50
1148841	PSHAFT-2.00X37.00X2.50
1148842	PSHAFT-2.00X38.00X2.50

1148843	PSHAFT-2.00X39.00X2.50
1148844	PSHAFT-2.00X40.00X2.50
1148845	PSHAFT-2.00X41.00X2.50
1148846	PSHAFT-2.00X42.00X2.50
1148847	PSHAFT-2.00X43.00X2.50
1148848	PSHAFT-2.00X44.00X2.50
1148849	PSHAFT-2.00X45.00X2.50
1148850	PSHAFT-2.00X46.00X2.50
1148851	PSHAFT-2.00X47.00X2.50
1148852	PSHAFT-2.00X48.00X2.50
1148853	PSHAFT-2.00X49.00X2.50
1148854	PSHAFT-2.00X50.00X2.50
1148855	PSHAFT-2.00X51.00X2.50
1148856	PSHAFT-2.00X52.00X2.50
1148857	PSHAFT-2.00X53.00X2.50
1148858	PSHAFT-2.00X54.00X2.50

1350 SERIES DRIVESHAFTS/SHORT COUPLED/ MTM BRANCH STORES NO FLANGES

1148878	NO.35 PTO D.S. ASSY. S/C
1148879	NO.35 PTO D.S. ASSY. S/C
1148880	NO.35 PTO D.S. ASSY. S/C
1148881	NO.35 PTO D.S. ASSY. S/C
1148882	NO.35 PTO D.S. ASSY. S/C

1350 SERIES DRIVESHAFTS W/ 2.00”” TUBING/ MTM BRANCH STORES NO FLANGES

1148883	NO.35 PTO D.S. ASSY.
1148884	NO.35 PTO D.S. ASSY.
1148885	NO.35 PTO D.S. ASSY.
1148886	NO.35 PTO D.S. ASSY.
1148887	NO.35 PTO D.S. ASSY.
1148888	NO.35 PTO D.S. ASSY.
1148889	NO.35 PTO D.S. ASSY.
1148890	NO.35 PTO D.S. ASSY.
1148891	NO.35 PTO D.S. ASSY.
1148892	NO.35 PTO D.S. ASSY.
1148893	NO.35 PTO D.S. ASSY. (BLACK)
1148894	NO.35 PTO D.S. ASSY.
1148895	NO.35 PTO D.S. ASSY.
1148896	NO.35 PTO D.S. ASSY.
1148897	NO.35 PTO D.S. ASSY.
1148898	NO.35 PTO D.S. ASSY.
1148899	NO.35 PTO D.S. ASSY.
1148900	NO.35 PTO D.S. ASSY.
1148901	NO.35 PTO D.S. ASSY.
1148902	NO.35 PTO D.S. ASSY.
1148903	NO.35 PTO D.S. ASSY.
1148904	NO.35 PTO D.S. ASSY.
1148905	NO.35 PTO D.S. ASSY.
1148906	NO.35 PTO D.S. ASSY.

1350 SERIES DRIVESHAFTS W/ 2.00”” TUBING/ MTM BRANCH STORES NO FLANGES/PAINT BLACK

1148909	NO.35 PTO D.S. ASSY.
1148911	NO.35 PTO D.S. ASSY.
1148912	NO.35 PTO D.S. ASSY.
1148917	NO.35 PTO D.S. ASSY.
1148919	NO.35 PTO D.S. ASSY.
1148920	NO.35 PTO D.S. ASSY.
1148922	NO.35 PTO D.S. ASSY.
1148923	NO.35 PTO D.S. ASSY.
1148924	NO.35 PTO D.S. ASSY.
1148925	NO.35 PTO D.S. ASSY.
1148926	NO.35 PTO D.S. ASSY.
1148927	NO.35 PTO D.S. ASSY.
1148928	NO.35 PTO D.S. ASSY.
1148929	NO.35 PTO D.S. ASSY.
1148930	NO.35 PTO D.S. ASSY.
1148931	NO.35 PTO D.S. ASSY.
1148932	NO.35 PTO D.S. ASSY.
1148933	NO.35 PTO D.S. ASSY.
1148934	NO.35 PTO D.S. ASSY.
1148935	NO.35 PTO D.S. ASSY.

1350 SERIES DRIVESHAFTS W/2.50”” TUBING / MTM BRANCH STORES NO FLANGES/PAINT BLACK

1148936	NO.35 PTO D.S. ASSY.
1148937	NO.35 PTO D.S. ASSY.
1148938	NO.35 PTO D.S. ASSY.
1148939	NO.35 PTO D.S. ASSY.
1148940	NO.35 PTO D.S. ASSY.
1148942	NO.35 PTO D.S. ASSY.
1148943	NO.35 PTO D.S. ASSY.
1148944	NO.35 PTO D.S. ASSY.
1148945	NO.35 PTO D.S. ASSY.
1148946	NO.35 PTO D.S. ASSY.
1148948	NO.35 PTO D.S. ASSY.
1148949	NO.35 PTO D.S. ASSY.
1148950	NO.35 PTO D.S. ASSY.
1148951	NO.35 PTO D.S. ASSY.
1148952	NO.35 PTO D.S. ASSY.
1148953	NO.35 PTO D.S. ASSY.
1148954	NO.35 PTO D.S. ASSY.
1148955	NO.35 PTO D.S. ASSY.
1148956	NO.35 PTO D.S. ASSY.
1148957	NO.35 PTO D.S. ASSY.
1148958	NO.35 PTO D.S. ASSY.
1148959	NO.35 PTO D.S. ASSY.
1148960	NO.35 PTO D.S. ASSY.
1148961	NO.35 PTO D.S. ASSY.
1148962	NO.35 PTO D.S. ASSY.
1148963	NO.35 PTO D.S. ASSY.
1148964	NO.35 PTO D.S. ASSY.

1350 SERIES DRIVESHAFTS W/2.50”” TUBING / MTM BRANCH STORES NO FLANGES/PAINT BLACK

1148965	NO.35 PTO D.S. ASSY.
1148966	NO.35 PTO D.S. ASSY.
1148967	NO.35 PTO D.S. ASSY.
1148968	NO.35 PTO D.S. ASSY.
1148969	NO.35 PTO D.S. ASSY.
1148970	NO.35 PTO D.S. ASSY.
1148971	NO.35 PTO D.S. ASSY.
1148972	NO.35 PTO D.S. ASSY.
1148973	NO.35 PTO D.S. ASSY.
1148975	NO.35 PTO D.S. ASSY.
1148976	NO.35 PTO D.S. ASSY.
1148977	NO.35 PTO D.S. ASSY.
1148978	NO.35 PTO D.S. ASSY.
1148979	NO.35 PTO D.S. ASSY.
1148980	NO.35 PTO D.S. ASSY.
1148981	NO.35 PTO D.S. ASSY.
1148982	NO.35 PTO D.S. ASSY.

PTO ADAPTERS

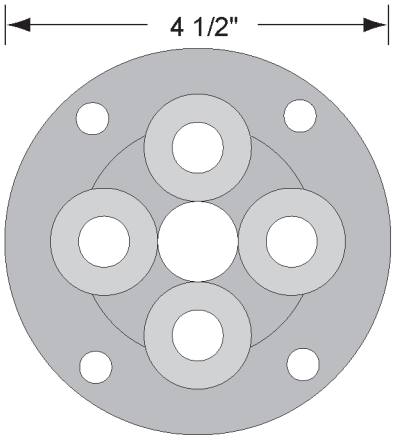

ADAPTER - PTO, FORD/CUMMINS TYPE II

0084105 MTM

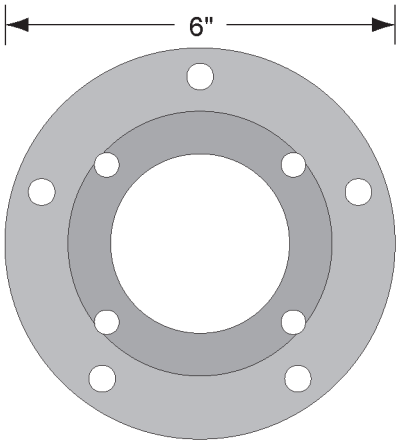

ADAPTER - PTO, DETROIT

0084563 MTM

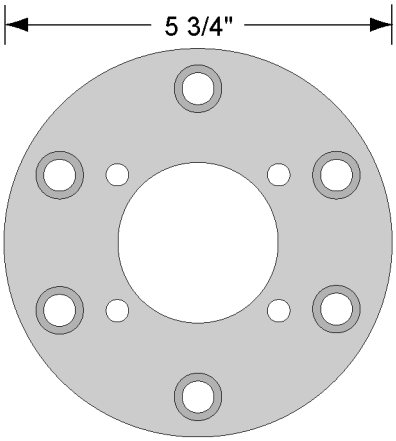

ADAPTER - PTO, L10 TYPE Z

0084693 MTM

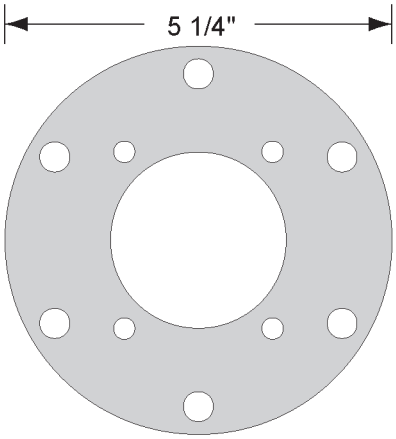

ADAPTER - PTO, CAT 3208

0084561 MTM

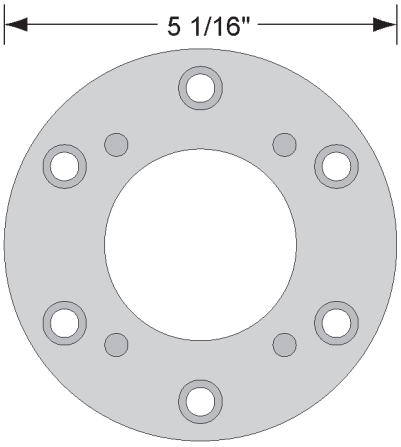

ADAPTER - PTO, DT 466

0084690 MTM

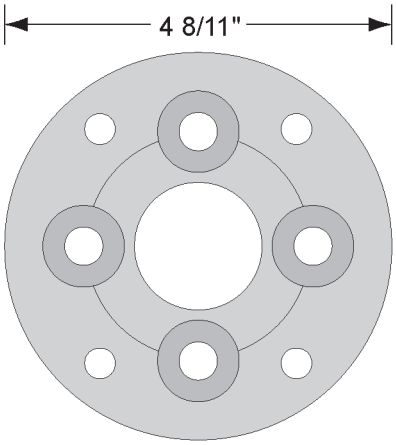

ADAPTER - PTO, CUMMINS, 1 PC

0084698 MTM

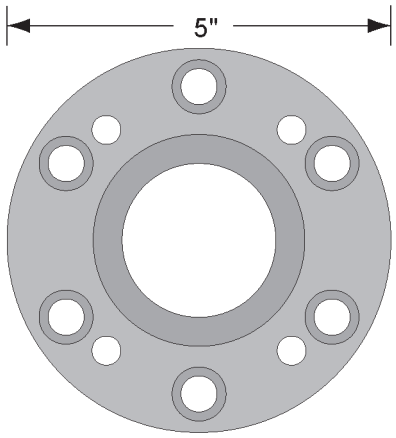

ADAPTER - PTO, MACK

0084560 MTM

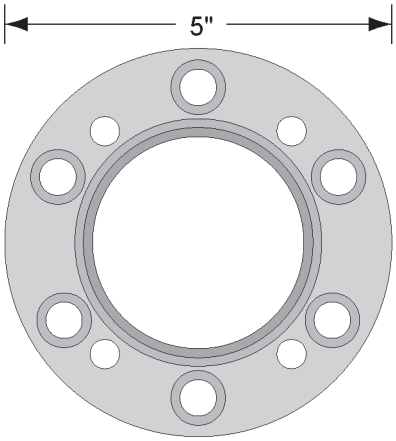

ADAPTER - PTO, MACK OFFSET

0084691 MTM

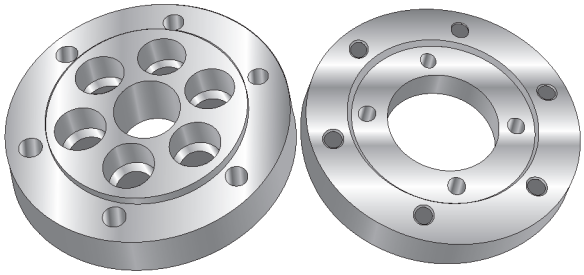

ADAPTER - PTO, CUMMINS 2 PC

0084562 MTM

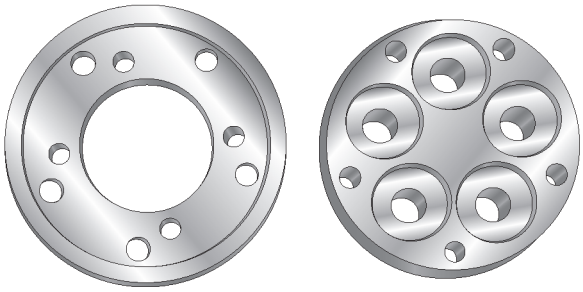

ADAPTER - PTO, CUMMINS, METRIC 2 PC

0084695 MTM

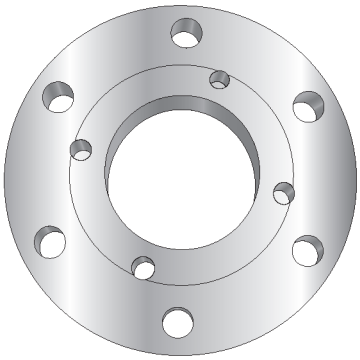

ADAPTER - PTO, CAT 3306

1165882 MTM

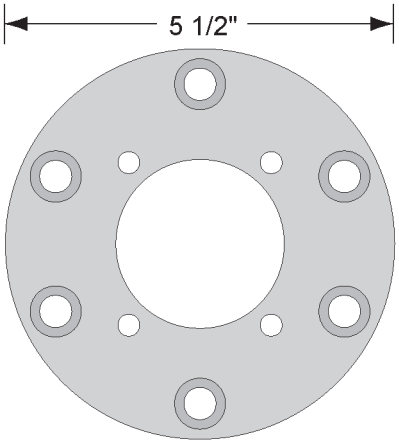

ADAPTER - PTO, L10 TYPE I

0084692 MTM

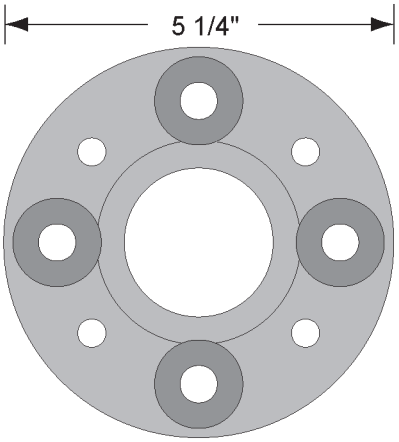

ADAPTER - PTO, CUMMINS TYPE I

0084107 MTM

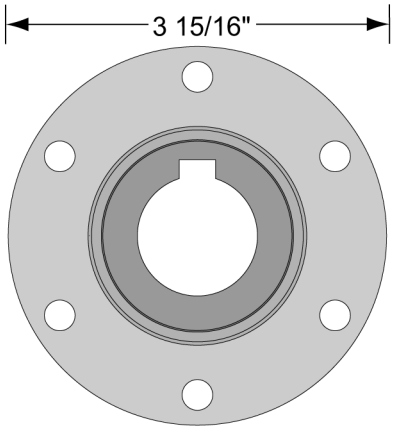

FLG - REPTO AUX DRIVE, METRIC

1262207 MTM

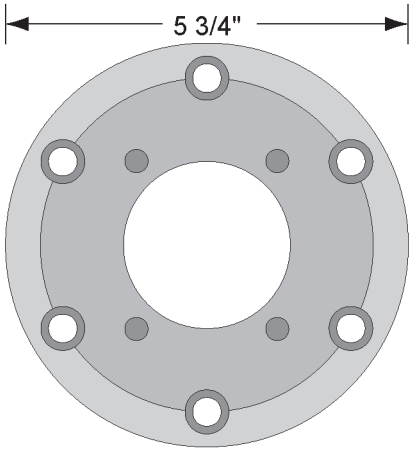

ADAPTER - PTO, PLT CUMMINS

0084689 MTM

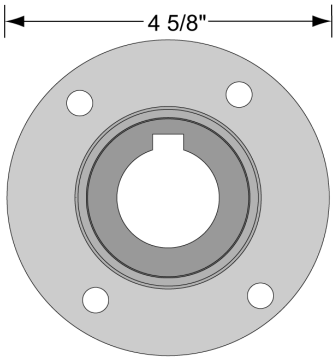

FLG - 1350, MBE REPTO PUMP,SAE

1339724 MTM

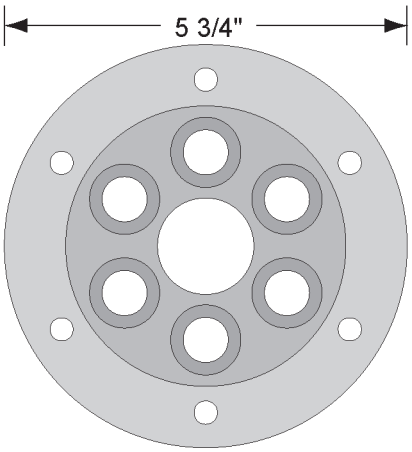

ADAPTER - PTO, CUMMINS 2 PC

0084688 MTM

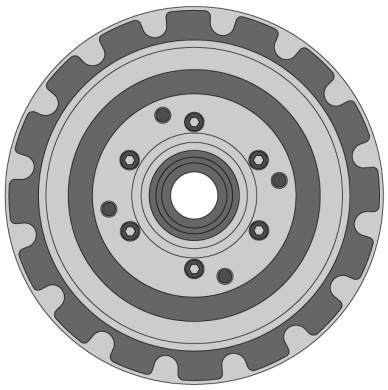

DAMPENER - TORSIONAL, MBE 4000, PTO METRIC

1262879 MTM

DAMPENER - MERCEDES REPTO,SAE

1361026 MTM

GEARBOX / MOTOR ADAPTERS

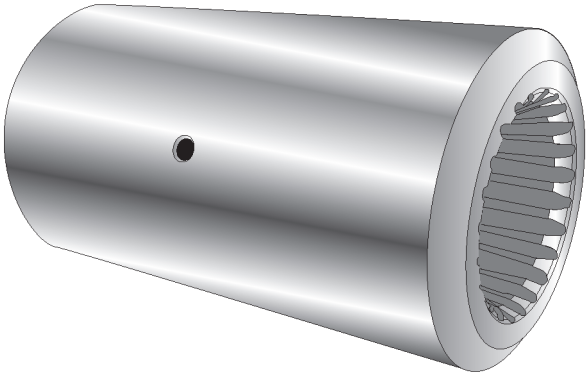

ADAPTER - GEARBOX/MOTOR, 23/23 SPLINE

0046552 MTM 102-08299-01 REX

COUPLING - GEARBOX/MOTOR, 23/20 SPLINE

0046551 MTM 102-08529-01 REX

COUPLER - SHAFT, 20/20 SPLINE

0046553 MTM 102-10072-01 REX

THIS PAGE INTENTIONALLY LEFT BLANK

THIS PAGE INTENTIONALLY LEFT BLANK

Control Valves

MTM

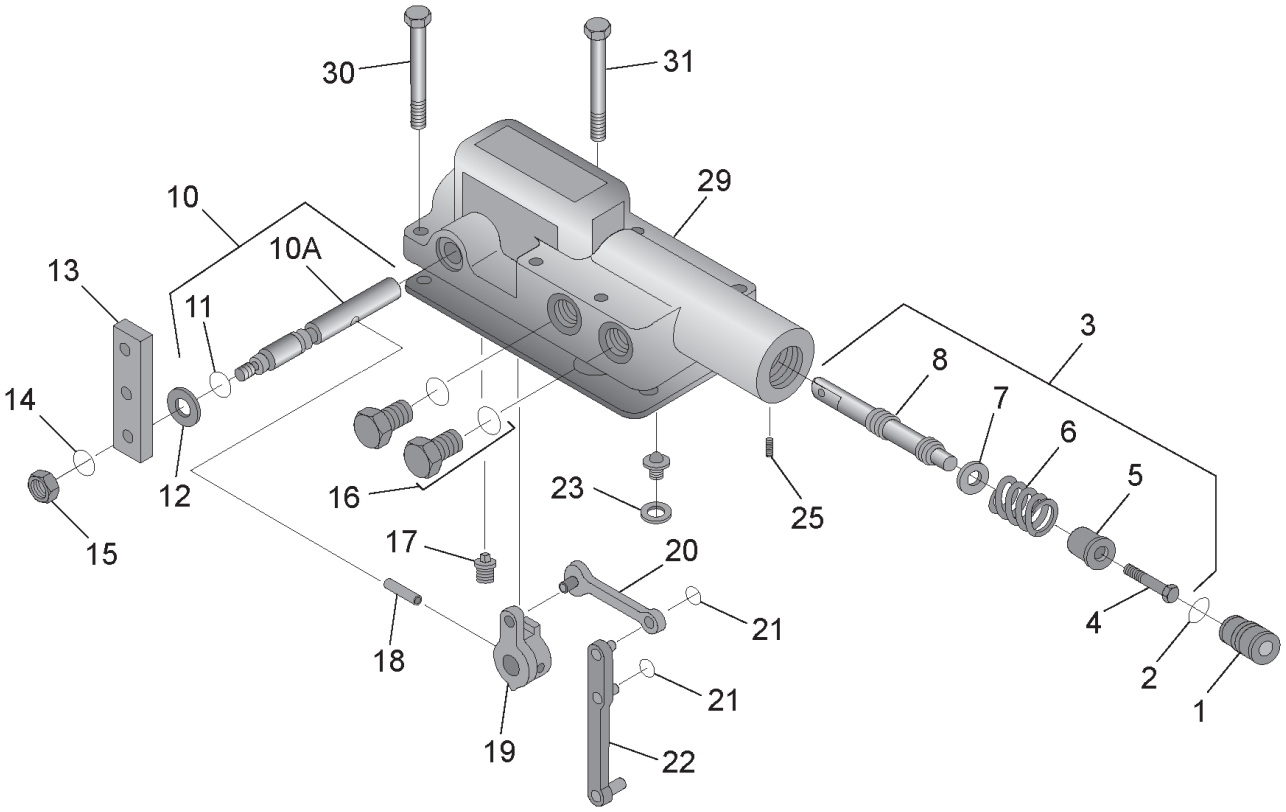

CONTROL VALVE - EATON, NEW

0002469 MTM

Item	MTM Part No.	Description
1.	NPN	SCREW - ADJUSTING, SPRING BOX
2.	0014685	O-RING
3.	NPN	SPOOL SUB ASSY - CONTROL
4.	0014227	SCREW - SOCKET HEAD, SHOULDER
5.	0014226	RETAINER - SPRING
6.	0001691	SPRING - CONTROL SPOOL
7.	0014228	SPACER - SPRING BOX
8.	0014296	SPOOL - CONTROL
9.	NPN	HOUSING - CONTROL
10.	0012945	SHAFT SUB ASSY - CONTROL, INCLUDES O-RING
11.	0014686	O-RING
11.	0002515	SEAL - WHITE TEFLON, OPTIONAL
12.	0002522	SEAL - EXLCUSION, DUST COVER
13.	0500314	ARM - EATON CONTROL VALVE
14.	NPN	WASHER
15.	NPN	NUT - HEX
16.	0014860	PLUG SUB ASSY
17.	NPN	SCREW - SET, SOCKET HEAD
18.	0014225	PIN - ROLL
19.	0002227	CONNECTOR -
20.	NPN	LINK - CONTROL
21.	1235431	RING - SNAP, EATON
22.	NPN	LINK - CONTROL
23.	0002494	ORIFICE - CONTROL PLATE
25.	NPN	SCREW - SET, SOCKET HEAD
29.	0002408	GASKET - CONTROL VALVE
30.	1134405	BOLT - MOUNTING
31.	NPN	BOLT - MOUNTING

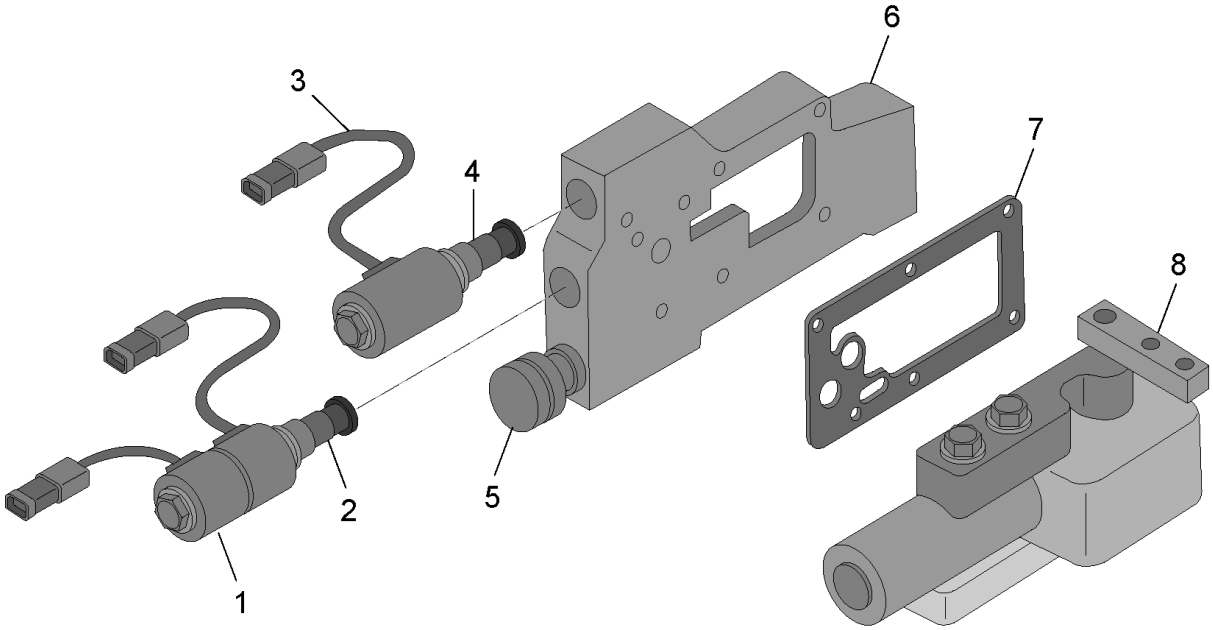

CONTROL VALVE - RE

1257136 MTM

Item	MTM Part No.	Description
1.	1139095	SOLENOID - EATON RE CONTROL LFT/RT
2.	0126235	CARTRIDGE - 4 WAY, RE CONTROL
3.	1274576	COIL - 12V, START/STOP, RE CONTROL
4.	1274577	CARTRIDGE - NC, RE CONTROL
5.	0126223	VALVE - BYPASS, RE CONTROL
6.	0126222	CONTROL - W/O CONTROL VALVE, RE
7.	0126240	GASKET - RE CONTROL VALVE
8.	1257136	VALVE ONLY - RE

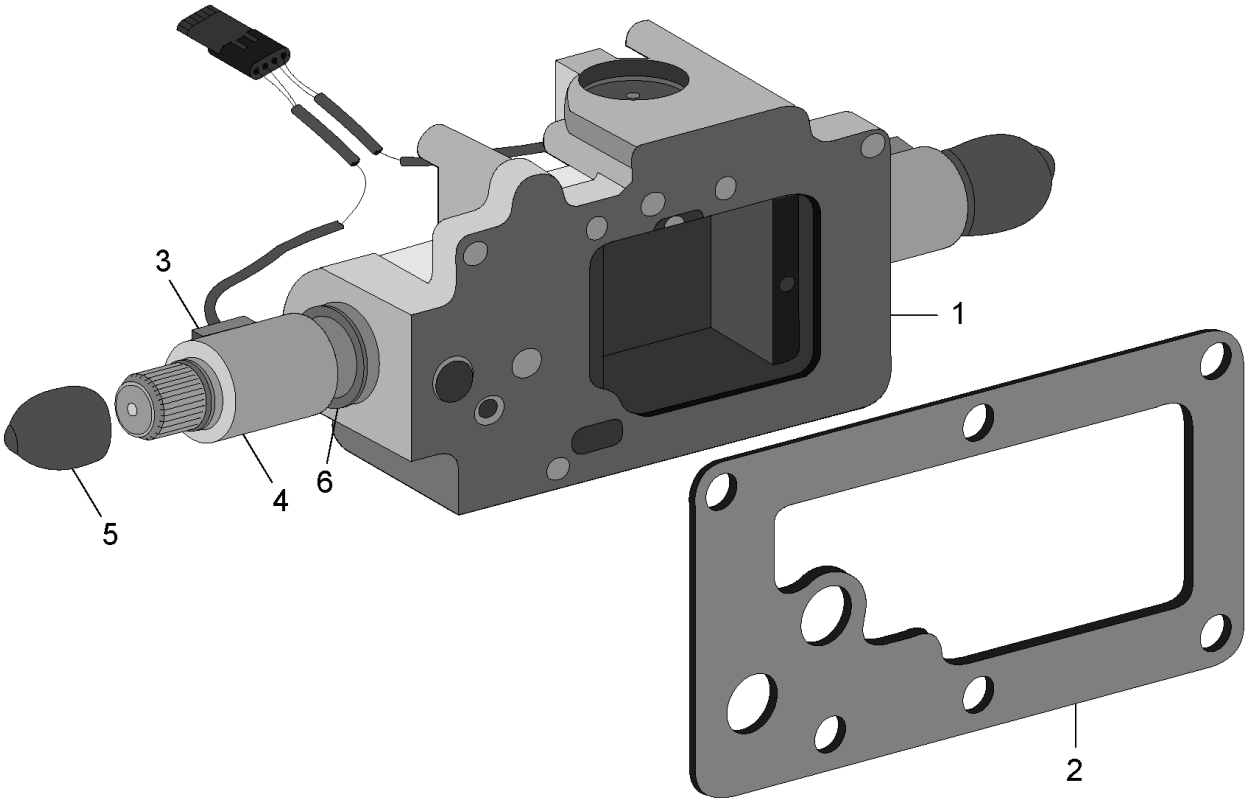

CONTROL VALVE - EP

1145094 MTM

Item	MTM Part No.	Description
1.	1145049	VALVE - CONTROL, EP
2.	0002408	GASKET - CONTROL VALVE
3.	1140768	COIL - 12V, EP CONTROL, W/DIODE
4.	1262205 - NLA	CARTRIDGE - EP, W/CAPNUT, O-RING AND GASKET
5.	1180596	COVER - W/PUSHPIN, RUPPER, EP
6.	1233060	GASKET - RUBBER,

KIMBLE

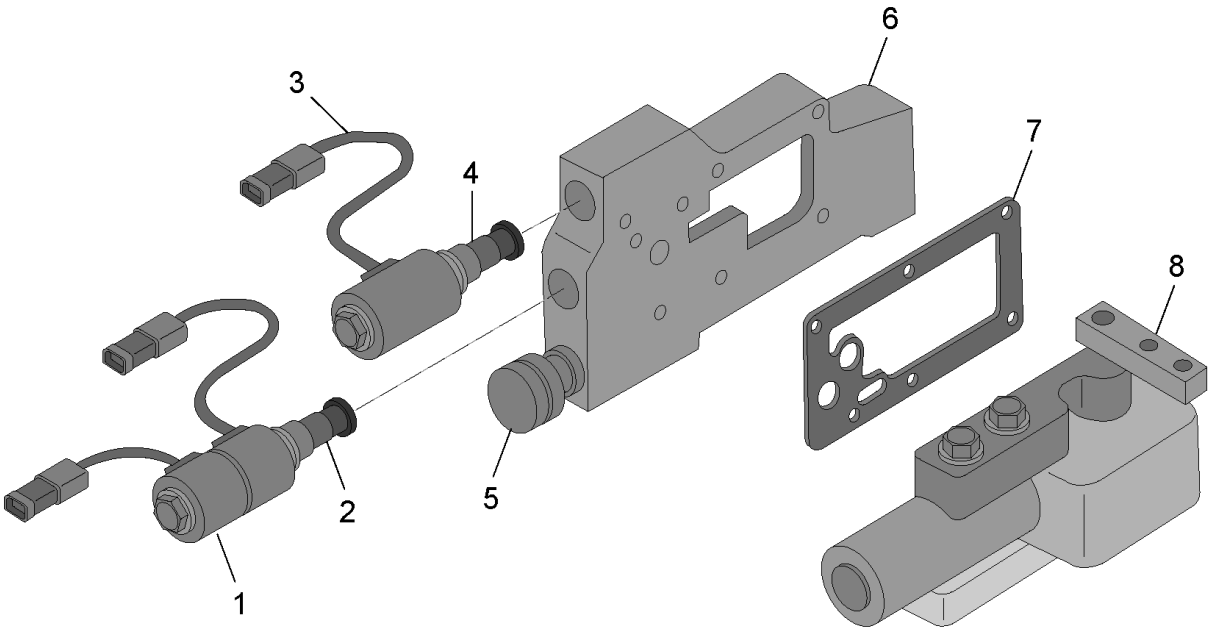

CONTROL VALVE - RE

1257136 MTM

Item	MTM Part No.	Kimble Part No.	Description
1.	1139095	H80-20260-30	SOLENOID - EATON RE CONTROL LFT/RT
2.	0126235	H11-109379-01	CARTRIDGE - 4 WAY, RE CONTROL
3.	1274576	H80-20156-70	COIL - 12V, START/STOP, RE CONTROL
4.	1274577	H11-20260-30	CARTRIDGE - NC, RE CONTROL
5.	0126223	NPN	VALVE - BYPASS, RE CONTROL
6.	0126222	H31-20003-00	CONTROL - W/O CONTROL VALVE, RE
7.	0126240	H32-11021-30	GASKET - RE CONTROL VALVE
8.	1257136	H31-10001-23	VALVE ONLY - RE CONTROL

SCHWING

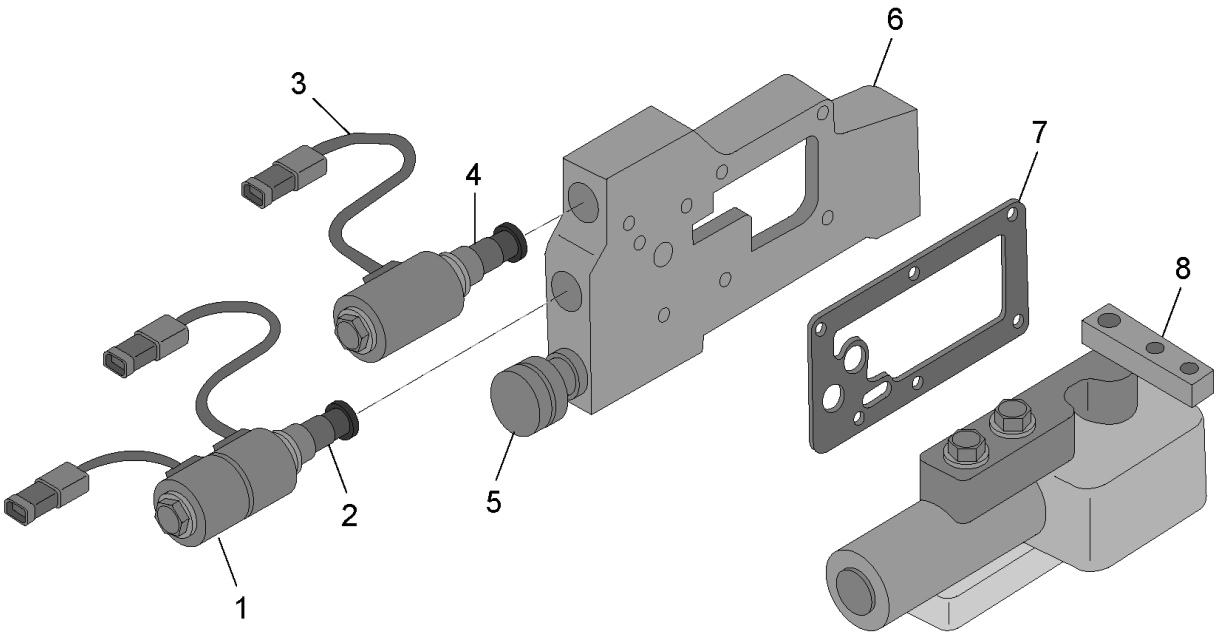

CONTROL VALVE - RE

1257136 MTM

Item	MTM Part No.	Schwing Part No.	Description
1.	1139095	30389882	SOLENOID - EATON RE CONTROL LFT/RT
2.	0126235	30386195	CARTRIDGE - 4 WAY, RE CONTROL
3.	1274576	30389877	COIL - 12V, START/STOP, RE CONTROL
4.	1274577	30386194	CARTRIDGE - NC, RE CONTROL
5.	0126223	30386196	VALVE - BYPASS, RE CONTROL
6.	0126222	30389428	CONTROL - W/O CONTROL VALVE, RE
7.	0126240	30386148	GASKET - RE CONTROL VALVE
8.	1257136	NPN	VALVE ONLY - RE CONTROL

THIS PAGE INTENTIONALLY LEFT BLANK

Gearboxes

ZF MODEL P-5300

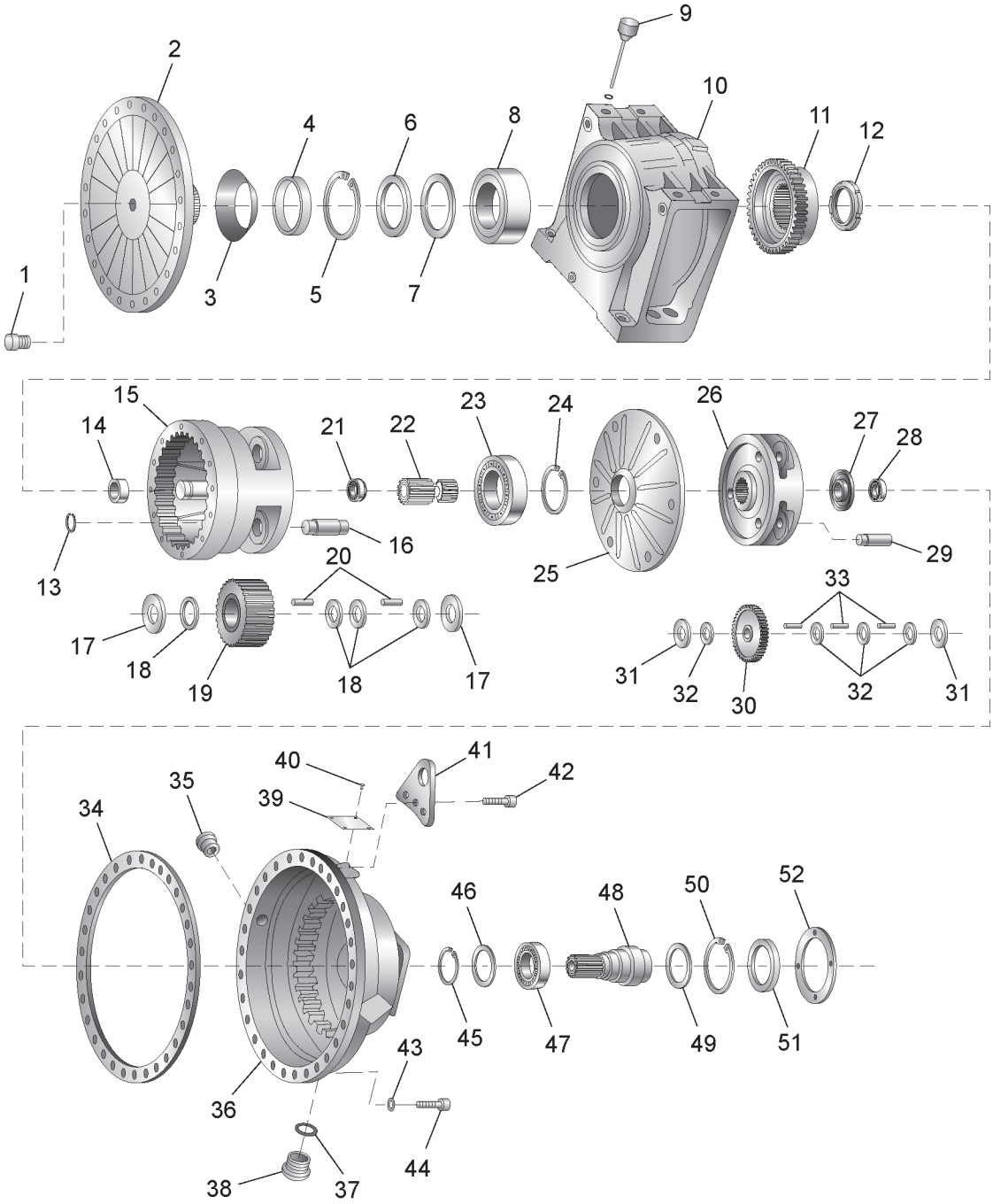

ZF MODEL P-5300			
Item	MTM Part No.	ZF Part No.	Description
	0115324R	P-5300EX	GEARBOX-REBUILT
	NPN	P-5300SK	SEAL KIT
	NPN	P-5300BK	BEARING KIT
1.	0215421	0631405018	PLUG
2.	0215420	4108303239	BEARING FLANGE
3.	0215301	0734307142	SEALING COLLAR
4.	0215302	4108306102	RING
5.	0215303	0630502067	RETAINING RING
6.	0215304	0630004189	THRUST DISC
7.	0215605	0730100233	SHIM 0.2MM
7.	0215306	0730100584	SHIM 0.3MM
7.	0215307	0730003018	SHIM 0.5MM
7.	0215308	0730003019	SHIM 0.7MM
8.	2BH166	0750-117-015	ROLLER BEARING
9.	1397061	4108 203 173	OIL DIPSTICK
10.	NPN	4108201199	BEARING HOUSING
11.	NPN	4108306101	CLUTCH HOUSING
12.	2BH170	0737502084	SLOTTED NUT
13.	0215315	0630501031	RETAINING RING
14.	0215314	0635285013	JOINT BEARING
15.	NPN	4108303219	PLANETARY CARRIER
16.	0215321	4108306091	PIN
17.	0215317	0730102684	THRUST WASHER
18.	0215319	0730102816	INTERMEDIATE WASHER
19.	NLA	4108306146	PLANETARY GEAR
20.	0215320	0750119092	NEEDLE BEARING
21.	2BH175	0635331269	BALL BEARING
22.	0215331	1408303212	SUN GEAR
23.	0215422	0635331260	BALL BEARING
24.	0215423	0630503018	SNAP RING
25.	0215401	4108301293	BEARING COVER
26.	NPN	4108302093	PLANETARY CARRIER
27.	0215339	4108302007	BEARING PLATE
28.	0215565	0635332196	BALL BEARING
29.	0215414	4108302062	BEARING PIN
30.	0215413	4108302088	PLANETARY GEAR
31.	0215485	0730106813	THRUST WASHER
32.	0215412	0730102644	INTERMEDIATE WASHER
33.	1580495	0735.301.585.000	NEEDLE BEARING 66PC (INDIV NLA)
34.	0215402	4108306172	GASKET
35.	0215397	0632610066	OIL SIGHT GLASS
36.	NPN	4108201194	HOUSING
37.	0215424	0634304287	O- RING
38.	0215326	0636100824	SCREW PLUG

ZF MODEL P-5300 (Continued)

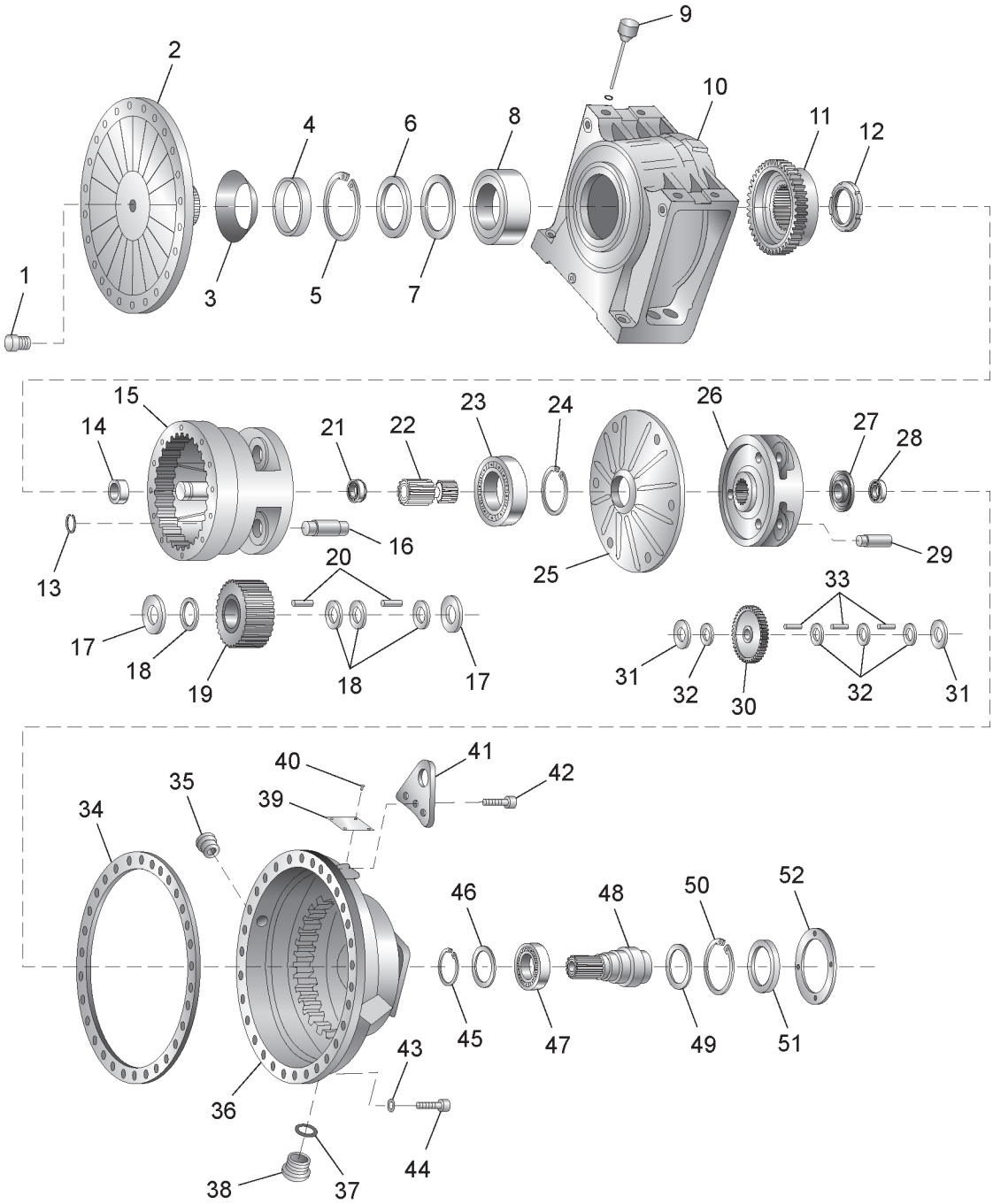

ZF MODEL P-5300			
Item	MTM Part No.	ZF Part No.	Description
39.	NPN	0730365058	NAME PLATE
40.	NPN	0631311009	GROOVED PIN
41.	NPN	4108302063	LIFTING BRACKET
42.	0215478	0636101073	SOCKET HEAD CAP SCREW
44.	0215477	0636101071	SOCKET HEAD CAP SCREW
45.	0215407	0630531064	RETAINING RING
46.	0215408	0730102341	SHIM
47.	0215465	0635331223	BALL BEARING
48.	0215403	4108302085	INPUT SHAFT 21 SPLINE
49.	0215467	0630000041	WASHER
50.	0215405	0630502039	RETAINING RING
51.	0215409	0634300610	SHAFT SEAL
52.	NPN	4108303213	GASKET

ZF MODEL P-6300

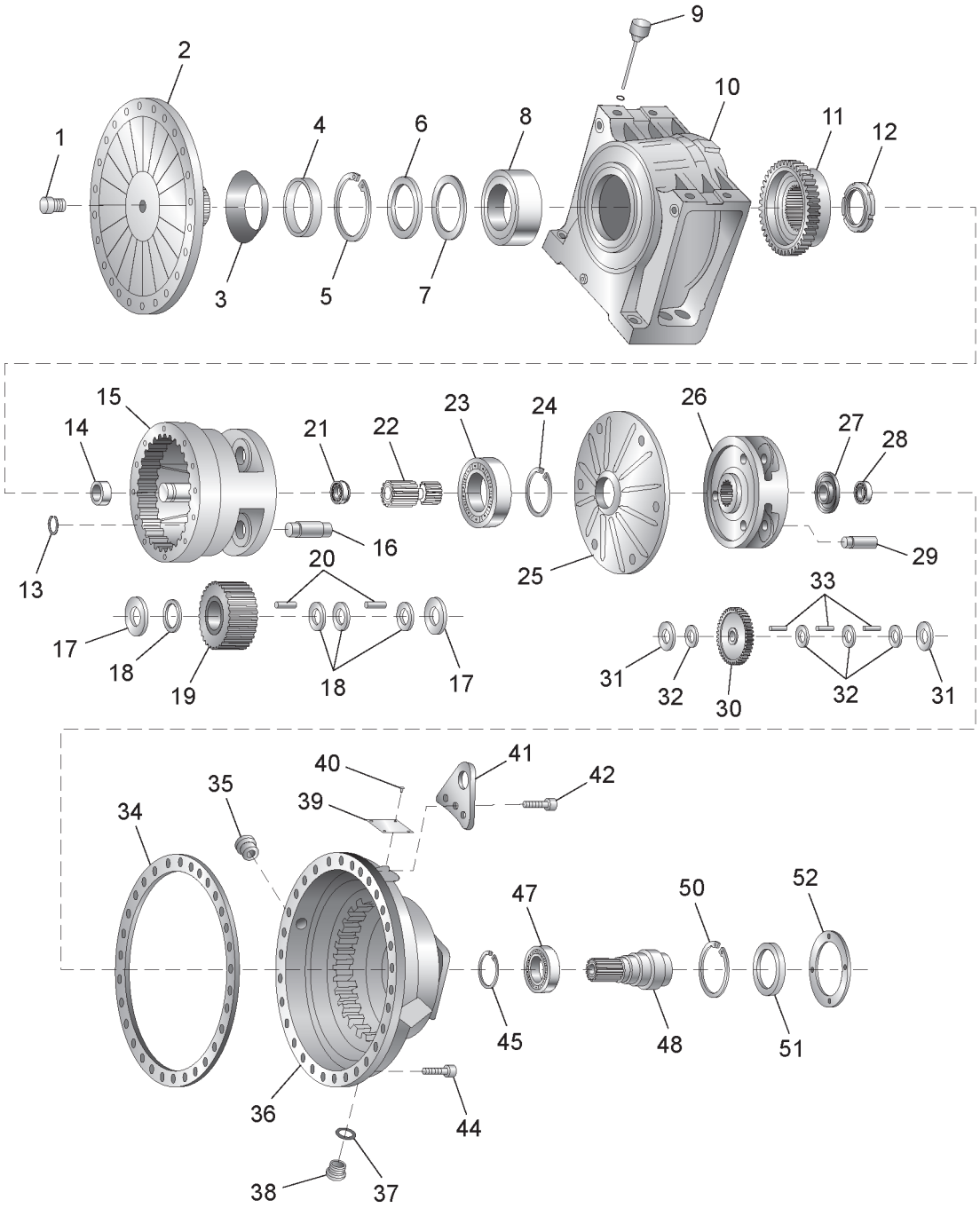

ZF MODEL P-6300			
Item	MTM Part No.	ZF Part No.	Description
	011534R	P-6300EX	GEARBOX-REBUILT
	NPN	P-6300SK	SEAL KIT
	NPN	P-6300BK	BEARING KIT
1.	0215421	631405018	PLUG
2.	NPN	4108303929	BEARING FLANGE
3.	0215301	0734307142	SEALING COLLAR
4.	0215302	410836102	RING
5.	0215303	0630502067	RETAINING RING
6.	0215304	0630004189	THRUST DISC
7.	0215305	0730100233	SHIM 0.2MM
7.	0215306	0730100584	SHIM 0.3MM
7.	0215307	0730003018	SHIM 0.5MM
7.	0215308	0730003019	SHIM 0.7MM
8.	2BH166	0750-117-715	ROLLER BEARING
9.	1397061	4108203173	OIL DIPSTICK
10.	NPN	4108203152	BEARING HOUSING
11.	NPN	4108306101	CLUTCH HOUSING
12.	2BH170	0737502084	SLOTTED NUT
13.	0215315	0630501031	RETAINING RING
14.	0215314	0635285013	JOINT BEARING
15.	1467724	4108303283	PLANETARY CARRIER
16.	0215494	4108303289	PIN
17.	0215317	0730102684	TRUST WASHER
18.	0215319	0730102816	INTERMEDIATE WASHER
19.	NPN	4108303285	PLANETARY GEAR
20.	0215320	0750119092	NEEDLE BEARING
21.	2BH175	0635331269	BALL BEARING
22.	0215495	4108303296	SUN GEAR
23.	0215422	0750116137	BALL BEARING
24.	0215423	0630503018	SNAP RING
25.	0215401	4108301293	BEARING COVER
26.	0215800	4108302192	PLANETARY CARRIER
27.	0215339	4108302007	BEARING PLATE
28.	0215565	0635332196	BALL BEARING
29.	0215414	4108302062	BEARING PIN
30.	NPN	4108302166	PLANETARY GEAR
31.	0215485	0730106813	TRUST WASHER
32.	0215412	0730102644	INTERMEDIATE WASHER
33.	1580495	0735.301.585.000	NEEDLE BEARING 66PC (INDIV NLA)
34.	0215402	4108306172	GASKET
35.	0215397	0632610066	OIL SIGHT GLASS
36.	NPN	4108201269	HOUSING
37.	0215424	0634304287	O-RING
38.	0215326	0636108024	SCREW PLUG

ZF MODEL P-6300 (Continued)

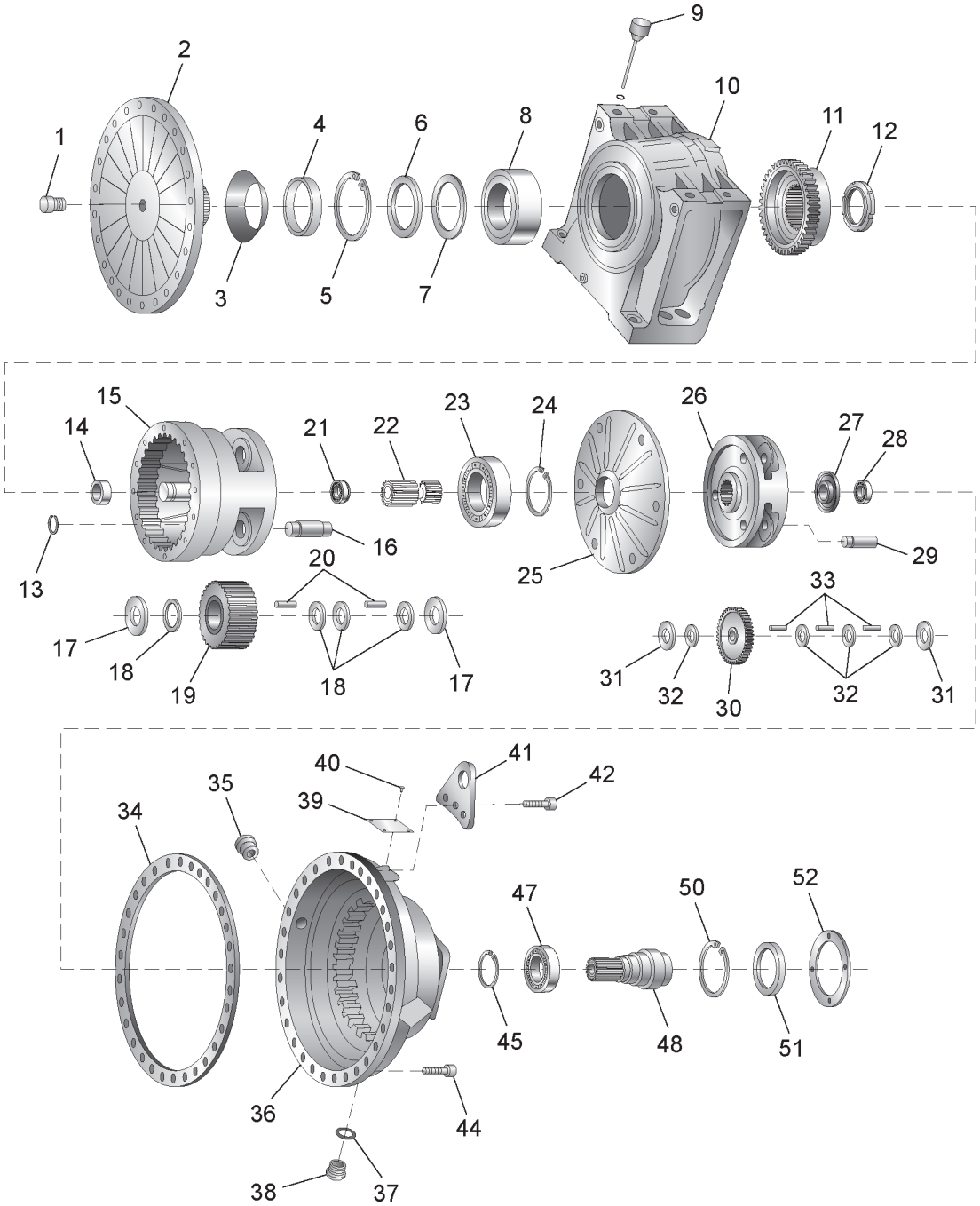

ZF MODEL P-6300			
Item	**MTM Part No.**	**ZF Part No.**	**Description**
39.	NPN	0730365058	NAME PLATE
40.	NPN	0631311009	GROOVED PIN
41.	NPN	4108302063	LIFTING BRACKET
42.	0215478	0636101073	SOCKET HEAD CAP SCREW
44.	0215477	0636101071	SOCKET HEAD CAP SCREW
45.	0215407	0630531064	RETAINING RING
47.	0215465	0635331223	BALL BEARING
48.	NPN	4108301431	INPUT SHAFT 21 SPLINE
50.	0215405	0630502039	RETAINING RING
51.	0215409	0634300610	SHAFT SEAL
52.	ZF4108-302-139	4108302139	GASKET

ZF MODEL P-7300

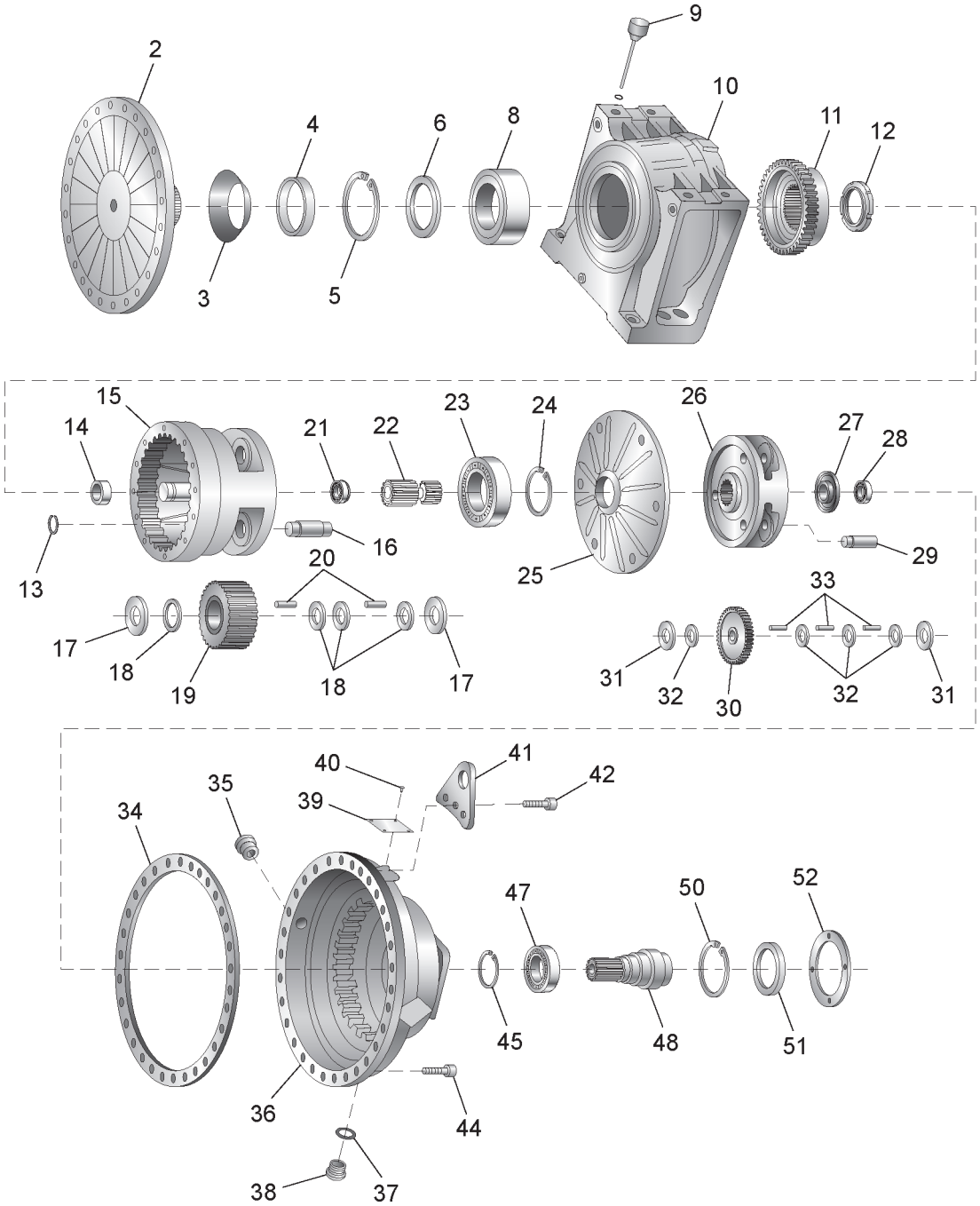

ZF MODEL P-7300			
Item	MTM Part No.	ZF Part No.	Description
	0115324R	P-7300EX	GEARBOX-REBUILT
	NPN	P-7300SK	SEAL KIT
	NPN	P-7300BK	BEARING KIT
2.	NPN	4108303292	BEARING FLANGE
3.	0215301	0734307142	SEALING COLLAR
4.	0215302	4108306102	RING
5.	0215303	0630502067	RETAINING RING
6.	0215304	0630004189	THRUST DISK
8.	0215563	0750117735	ROLLER BEARING
9.	1397061	4108203173	OIL DIPSTICK
10.	NLA	4108203154	BEARING HOUSING
11.	0215568	4108303320	CLUTCH HOUSING
12.	2BH170	0737502084	SLOTTED NUT
13.	0215315	0630501031	RETAINING RING
14.	0215314	0635285013	JOINT BEARING
15.	1467724	4108303283	PLANETARY CARRIER
16.	0215494	4108303289	PIN
17.	0215317	0730102684	THRUST WASHER
18.	0215319	0730102816	INTERMEDIATE WASHER
19.	0215493	4108303298	PLANETARY GEAR
20.	0215320	0750119092	NEEDLE BEARING
21.	0215390	0750116322	BALL BEARING
22.	1477122	4108303296	SUN GEAR
23.	0215422	0750116137	BALL BEARING
24.	0215423	0630503018	SNAP RING
25.	0215401	4108301293	BEARING COVER
26.	0215800	4108302192	PLANETARY CARRIER
27.	0215339	4108302007	BEARING PLATE
28.	0215565	0750116343	BALL BEARING
29.	0215414	4108302062	BEARING PIN
30.	0215499	4108302190	PLANETARY GEAR
31.	0215485	0730106813	THRUST WASHER
32.	0215412	0730102644	INTERMEDIATE WASHER
33.	1580495	0735.301.585.000	NEEDLE BEARING 66 PC (INDV NLA)
34.	0215402	4108306172	GASKET
35.	0215397	0632610066	OIL SIGHT GLASS
36.	NPN	4108201279	HOUSING
37.	0001188	0634801057	SEALING RING
38.	NPN	4475280018	SCREW PLUG
39.	NPN	0730365127	NAME PLATE
40.	NPN	0631311009	GROOVED PIN
41.	0215561	4108302199	LIFTING BRACKET
42.	0215478	0636101073	SOCKET HEAD CAP SCREW
44.	0215477	0636101071	SOCKET HEAD CAP SCREW

ZF MODEL P-7300 (Continued)

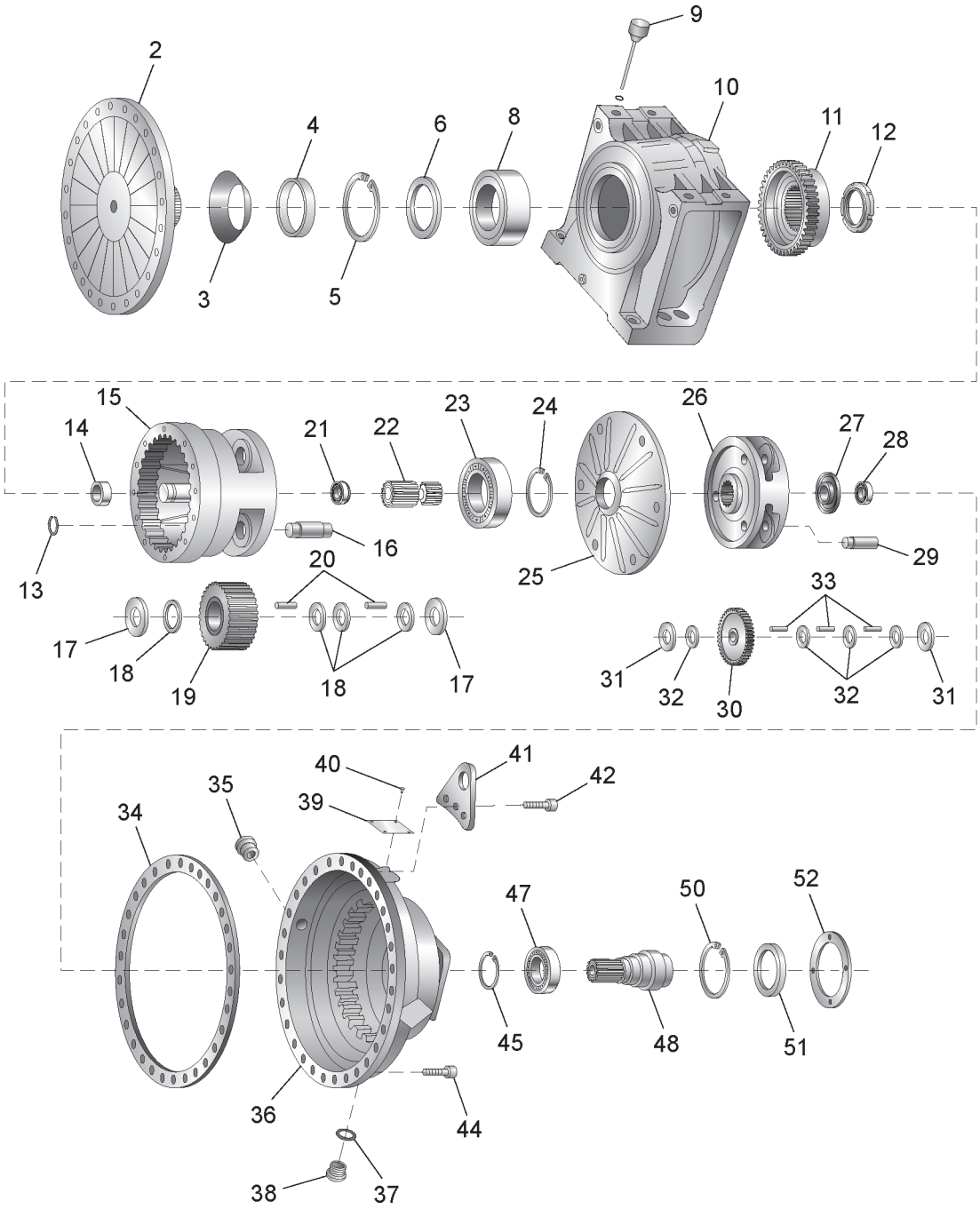

ZF MODEL P-7300			
Item	MTM Part No.	ZF Part No.	Description
45.	0215407	0630531064	RETAINING RING
47.	1HR981	0750116277	BALL BEARING
48.	0215498	4108301450	INPUT SHAFT 21 SPLINE
50.	0215405	0630502039	RETAINING RING
51.	0215409	0634300610	SHAFT SEAL
52.	ZF4108-302-139	4108302139	GASKET

ZF MODEL PK-6500

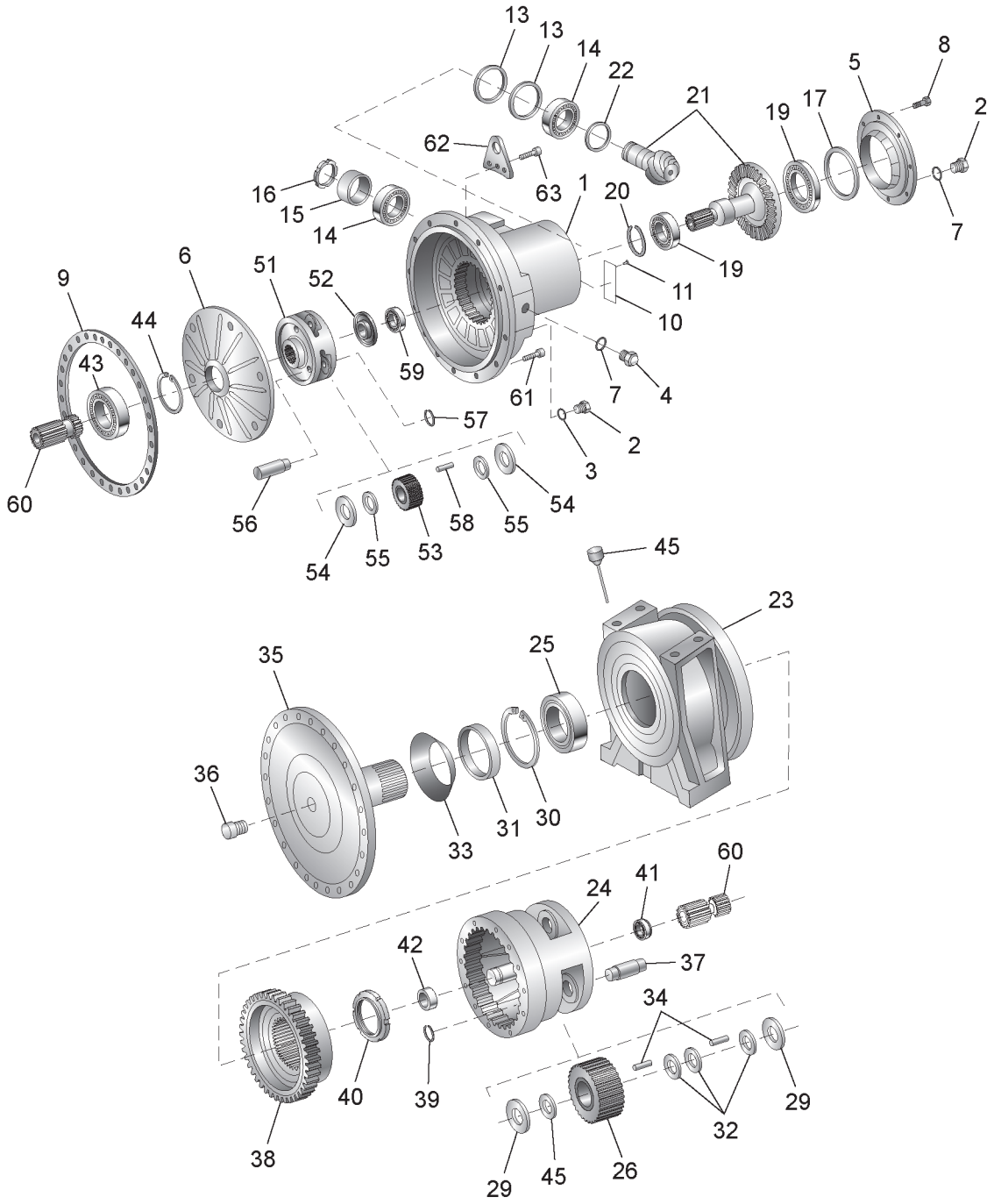

ZF MODEL PK-6500			
Item	MTM Part No.	ZF Part No.	Description
	0115325R	PK-6500EX	GEARBOX-REBUILT
	NPN	PK-6500SK	SEAL KIT
	NPN	PK-6500BK	BEARING KIT
1.	NPN	0634-304-287	HOUSING
2.	0215326	0636-100-824-01	SCREW PLUG
3.	0215424	0635-33124801	O- RING
4.	0215397	0632-610-066	OIL SIGHT GLASS
5.	0215369	4108-303-034	COVER
6.	0215401	4108-301-293	BEARING COVER
7.	0215327	0634-801-074	SEALING RING
8.	0215370	0636-015-120	HEX HEAD CAP SCREW
9.	0215402	4108-306-172	GASKET
10.	NPN	0730-365-127	NAME PLATE
11.	NPN	0631-311-009	GROOVED STUD
12.	1165475	0730-005-754	SHIM 2.20MM
12.	NPN	0730-006-871	SHIM 2.30MM
12.	1165477	0730-005-753	SHIM 2.40MM
12.	1165478	0730-006-874	SHIM 2.50MM
12.	NPN	0730-005-752	SHIM 2.60MM
12.	NPN	0730-007-237	SHIM 2.70MM
13.	0215356	4002-302-021	SHIM 0.50MM
13.	0215357	4002-302-022	SHIM 0.30MM
13.	0215358	4002-302-023	SHIM 0.20MM
13.	NPN	4002-007-558	SHIM 0.40MM
14.	0215346	0750-117-057	ROLLER BEARING
15.	0215393	4108-303-214	BUSHING
16.	0215350	0737-502-128	SLOTTED NUT
17.	0215363	0730-000-874	WASHER 1.0MM
17.	0215364	0730-002-241	WASHER 0.8MM
17.	0215365	0730-002-242	WASHER 0.5MM
17.	0215366	0730-002-243	WASHER 0.4MM
17.	0215367	0730-002-244	WASHER 0.3MM
17.	0215368	0730-002-245	WASHER 0.2MM
18.	0215362	0750-116-188	BALL BEARING
19.	0215556	073533028401	BALL BEARING
20.	0215557	0630-531-057	RETAINING RING
21.	NPN	4108-202-049	BEVEL GEAR SET
22.	0215476	4108-303-160	RING
23.	NLA	4108-203-154	BEARING HOUSING
24.	NLA	NLA	PLANETARY CARRIER
25.	2BH166	0750 117 715 01	ROLLER BEARING
26.	0215393	4108303214101	PLANETARY GEAR

ZF MODEL PK-6500 (Continued)

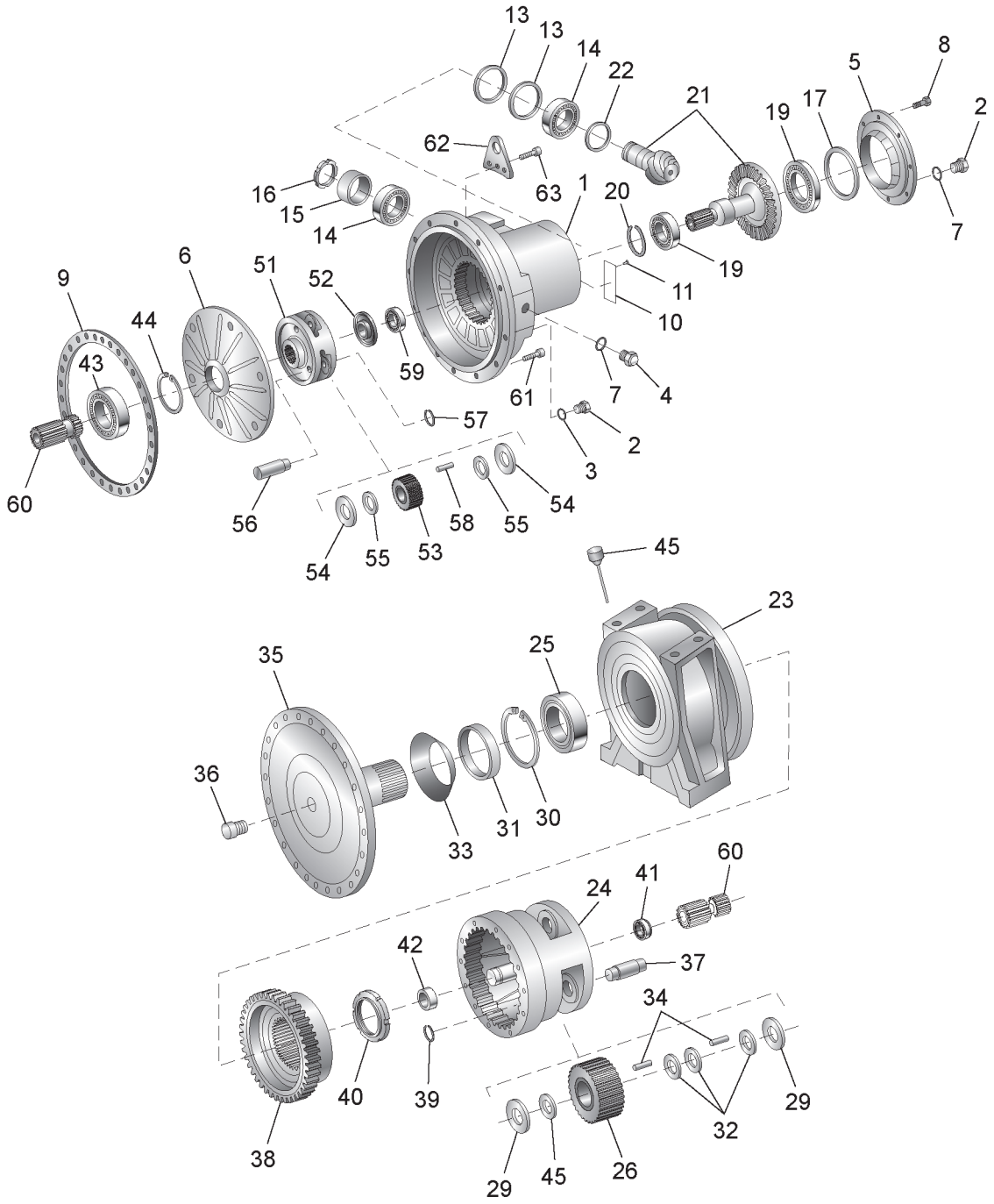

ZF MODEL PK-6500			
Item	MTM Part No.	ZF Part No.	Description
29.	0215317	0730-102-684	THRUST WASHER
30.	0215303	0630-502-067	RETAINING RING
31.	0215302	4108-306-102	RING
32.	0215319	0730-102-816	INTERMEDIATE WASHER
33.	NPN	0374-112-169	SEALING COLLAR
34.	0215320	0750-119-092	NEEDLE BEARING
35.	NPN	4108-303-292	BEARING FLANGE
36.	0215421	0631-405-018	PLUG
37.	0215494	4108-303-289	PIN
38.	NPN	4108-306-101	CLUTCH HOUSING
39.	0215315	0630-501-031	RETAINING RING
40.	2BH170	0737-502-084	SLOTTED NUT
41.	0215390	0635-331-269	BALL BEARING
42.	0215314	0635-285-013	JOINT BEARING
43.	0215422	0750-116-137	BALL BEARING
44.	0215423	0630-503-018	SNAP RING
45.	1397061	4108-203-149	OIL DIPSTICK
51.	NPN	4108-308-038	PLANETARY CARRIER
52.	0215339	4108-302-007	BEARING PLATE
53.	0215566	4108-308-037	PLANETARY GEAR
54.	0215334	0730-150-238	TRUST WASHER
55.	0215335	0730-102-311	TRUST WASHER
56.	0215332	4108-302-004	PIN
57.	0215338	0630-501-025	RETAINING RING
58.	0087027	0735-470-179	NEEDLE BEARING
59.	0215565	0635-332-196	BALL BEARING
60.	0215495	4108-303-296	SUN GEAR
61.	1477122	0636-101-071	SOCKET HEAD CAP SCREW
62.	0215561	4108-302-199	LIFTING BRACKET
63.	0215478	0636-101-073	SOCKET HEAD CAP SCREW
N/S.	NPN	4108-303-213	GASKET

ZF MODEL PK-7500

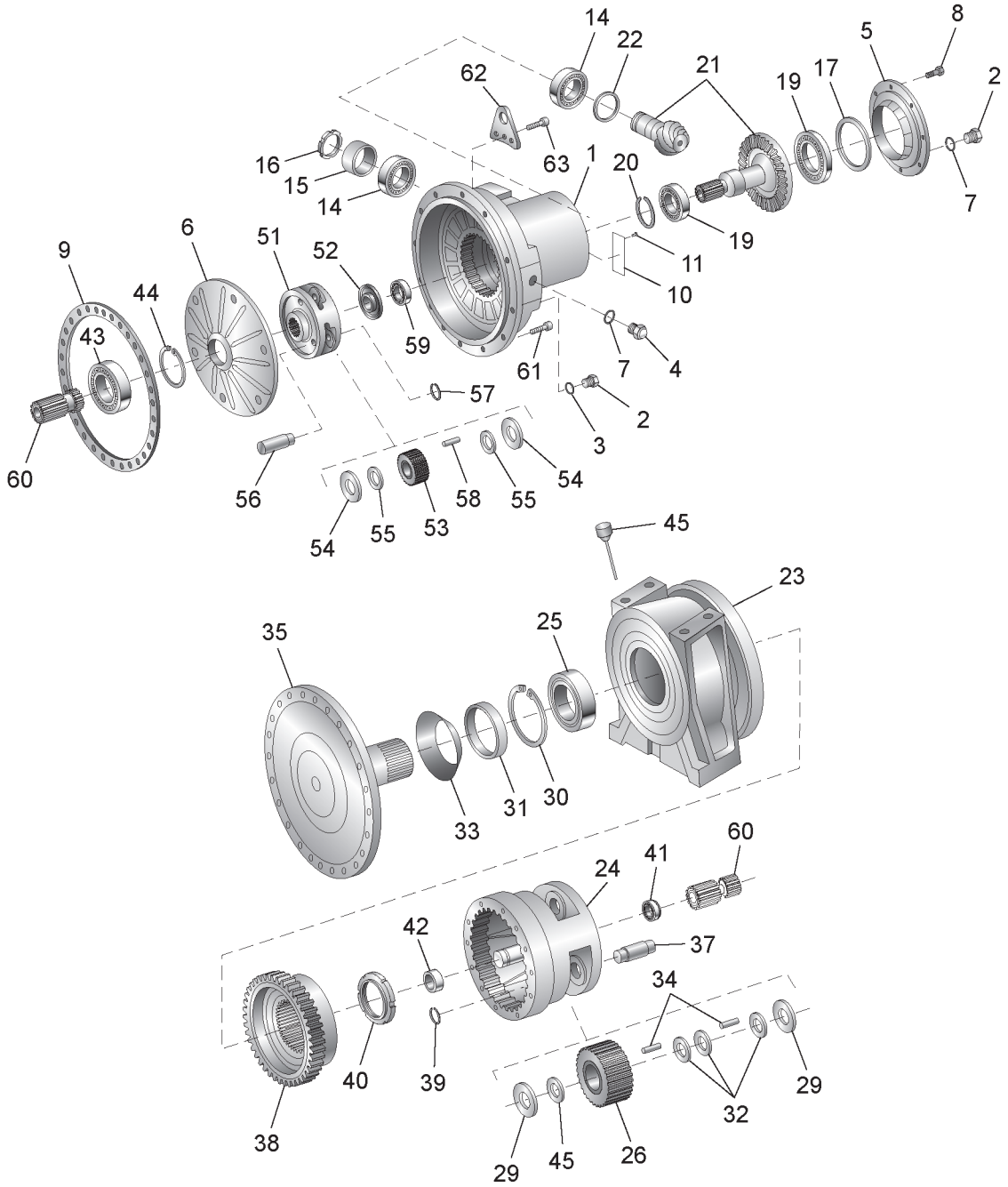

ZF MODEL PK-7500			
Item	MTM Part No.	ZF Part No.	Description
	0115325	PK-7500EX	GEARBOX-REBUILT
	NPN	PK-7500SK	SEAL KIT
	NPN	PK-7500BK	BEARING KIT
1.	NPN	4108-201-281	HOUSING
2.	NPN	4475-280-018	SCREW PLUG
3.	0215424	0634-304-287	O-RING
4.	0215397	0621-610-066	OIL SIGHT GLASS
5.	0215369	4108-303-034	COVER
6.	0215401	4108-301-293	BEARING COVER
7.	0215327	0634-801-074	SEALING RING
8.	0215370	0636-015-120	HEX HEAD CAP SCREW
9.	0215402	4108-306-172	GASKET
10.	NPN	0730-365-127	NAME PLATE
11.	NPN	0631-311-009	GROOVED STUD
12.	1165475	0730-005-754	SHIM 2.20MM
12.	NPN	0730-006-871	SHIM 2.30MM
12.	1165477	0730-005-753	SHIM 2.40MM
12.	1165478	0730-006-874	SHIM 2.50MM
12.	NPN	0730-005-752	SHIM 2.60MM
12.	NPN	0730-007-237	SHIM 2.70MM
12.	1165479	0730-007-239	SHIM 2.80MM
12.	NPN	0730-007-697	SHIM 3.10MM
12.	NPN	0730-005-751	SHIM 3.00MM
12.	0215352	0730002171	SHIM 2.90MM
12.	NPN	0730-005-750	SHIM 3.20MM
14.	0215346	0750-117-057	ROLLER BEARING
15.	0215393	4108-303-214	BUSHING
16.	0215350	0737-502-128	SLOTTED NUT
17.	0215363	0730-000-874	WASHER 1.0MM
17.	0215364	0730-002-241	WASHER 0.8MM
17.	0215365	0730-002-242	WASHER 0.5MM
17.	0215366	0730-002-243	WASHER 0.4MM
17.	0215367	0730-002-244	WASHER 0.3MM
17.	0215368	0730-002-245	WASHER 0.2MM
18.	0215362	0750.116.188.000	BALL BEARING
19.	0215556	07356.330.284.01	BALL BEARING
20.	0215557	0630-531-057	RETAINING RING
21A.	NPN	4108-202-050	SUN GEAR
21B.	0215559	4108-302-158	BEVEL PINION
22.	0215476	4108-303-160	RING
23.	NLA	4108-203-154	BEARING HOUSING
24.	NPN	NPN	PLANETARY CARRIER
25.	0215563	0750-117-735	ROLLER BEARING

ZF MODEL PK-7500 (Continued)

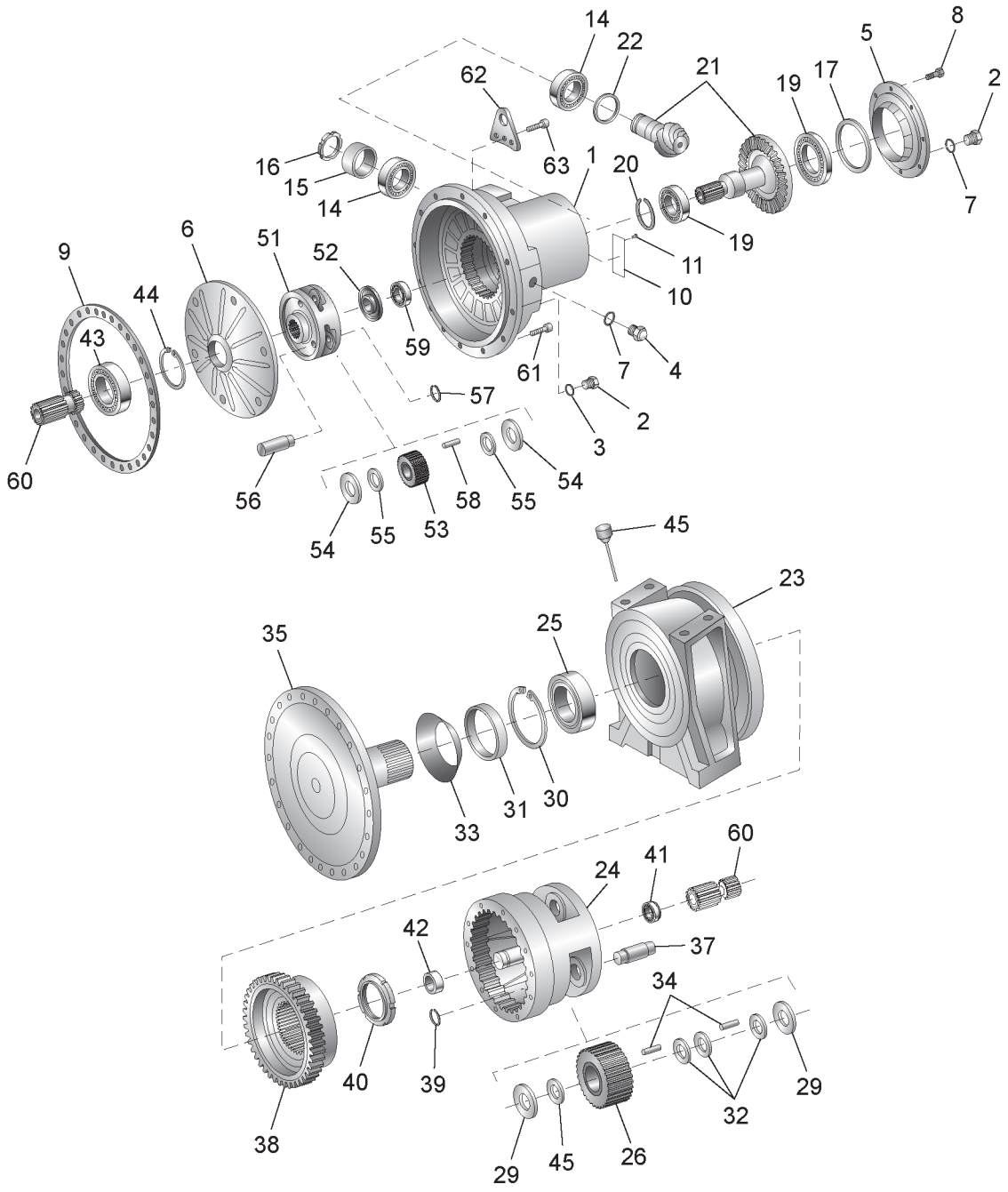

ZF MODEL PK-7500			
Item	MTM Part No.	ZF Part No.	Description
26.	0215493	4108-303-298	PLANETARY GEAR
29.	0215317	0730-102-684	THRUST WASHER
30.	NPN	0630-502-067	RETAINING RING
31.	0215302	4108-306-102	RING
32.	0215319	0730-102-816	INTERMEDIATE WASHER
33.	NPN	0734-112-169	SEALING COLLAR
34.	0215320	0750-119-092	NEEDLE BEARING
35.	NLA	4108-303-321	BEARING FLANGE
37.	0215494	4108-303-289	PIN
38.	0215568	4108-303-320	CLUTCH HOUSING
39.	0215315	0630-501-031	RETAINING RING
40.	2BH170	0737-502-084	SLOTTED NUT
41.	0215390	0750-116-322	BALL BEARING
42.	0215314	0635-285-013	JOINT BEARING
43.	0215422	0750-116-137	BALL BEARING
44.	0215423	0630-503-018	SNAP RING
45.	1397061	4108-203-149	OIL DIPSTICK
51.	NPN	4108-308-038	PLANETARY CARRIER
52.	0215339	4108-302-007	BEARING PLATE
53.	0215566	4108-308-037	PLANETARY GEAR
54.	0215334	0730-150-238	THRUST WASHER
55.	0215335	0730-102-311	THRUST WASHER
56.	0215332	4108-302-004	PIN
57.	0215338	0630-501-025	RETAINING RING
58.	0215320	0750-119-092-01	NEEDLE BEARING
59.	0215565	0750-116-343	BALL BEARING
60.	0215495	4108-303-296	SUN GEAR
61.	1477122	0636-101-071	SOCKET HEAD CAP SCREW
62.	0215561	4108-302-199	LIFTING BRACKET
63.	0215478	0636-101-073	SOCKET HEAD CAP SCREW
N/S.	1111397	4108-306-171	GASKET

CHALLENGE MODEL 08 (12 BOLT)

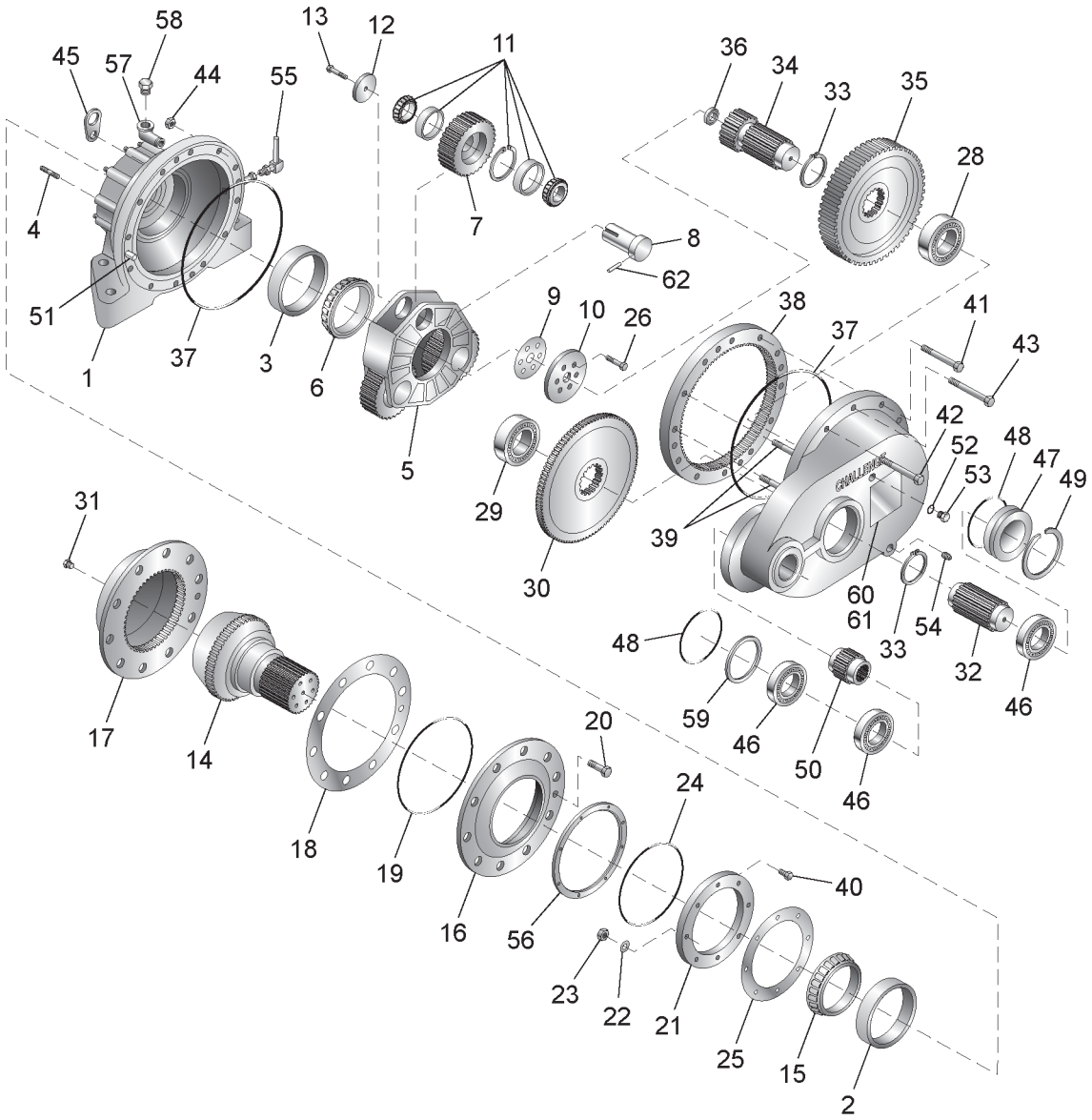

CHALLENGE MODEL 08 (12 BOLT)			
Item	MTM Part No.	ZF Part No.	Description
	0012066	1640320	GEARBOX-REBUILT
	NPN	1640320	SEAL AND SHIM KIT
	NPN	1640320	BEARING KIT
1.	NPN	5062244	HOUSING OUTPUT
2.	0016099	1300497	CUP BEARING
3.	0016082	1300496	CUP BEARING
4.	NPN	5062153	STUD
5.	NPN	5062256	CAGE PLANETARY
6.	0016098	1300494	CONE-BEARING
7.	NPN	1670548	GEAR-PLANET
8.	0016475	5062261	SHAFT PLANET GEAR
9.	NPN	4060592	SHIM KIT
10.	NLA	5062245	PLATE OUTPUT SHAFT
11.	0016094	1300490	BEARING ASSEMBLY
12.	0016906	5062246	PLATE PLANET GEAR SHAFT
13.	0016692	1032523	CAP SCREW
14.	0016950	1670553	OUTPUT SHAFT
15.	0016083	1300495	CONE-BEARING
16.	NPN	1670555	SOCKET, FRONT TRUNNION
17.	0016952	1670556	SOCKET, REAR TRUNNION
18.	NLA	4060034	SHIM KIT
19.	0016889	1690740	O-RING
20.	NPN	1032059	CAP SCREW
21.	0016406	5062247	RING RETAINER
22.	NPN	1050362	LOCKWASHER
23.	0120251	36204	JAM NUT
24.	0016890	5062903	O-RING (SPECIFY 3/8 OR 7/16)
25.	NLA	4060593	SHIM KIT
26.	0014709	1032057	HEX HEAD CAP SCREW
27.	NPN	5061871	HOUSING OUTPUT
28.	0016096	1300492	BEARING
29.	0016095	1300491	BEARING
30.	0016754	1670540	DRIVEN GEAR FIRST STAGE
31.	NPN	1573710	PLUG
32.	0016536	1670551	SHAFT SECOND STAGE
33.	0016468	1050177	SNAP RING
34.	0016532	1670538	SUN GEAR
35.	0016533	1670539	DRIVEN GEAR SECOND STAGE
36.	0016093	1300489	BEARING
37.	0016407	5062150	O-RING
38.	0016534	1670547	RING GEAR
39.	NPN	1032481	CAP SCREW
40.	0015824	1032422	CAP SCREW

CHALLENGE MODEL 08 (12 BOLT) (Continued)

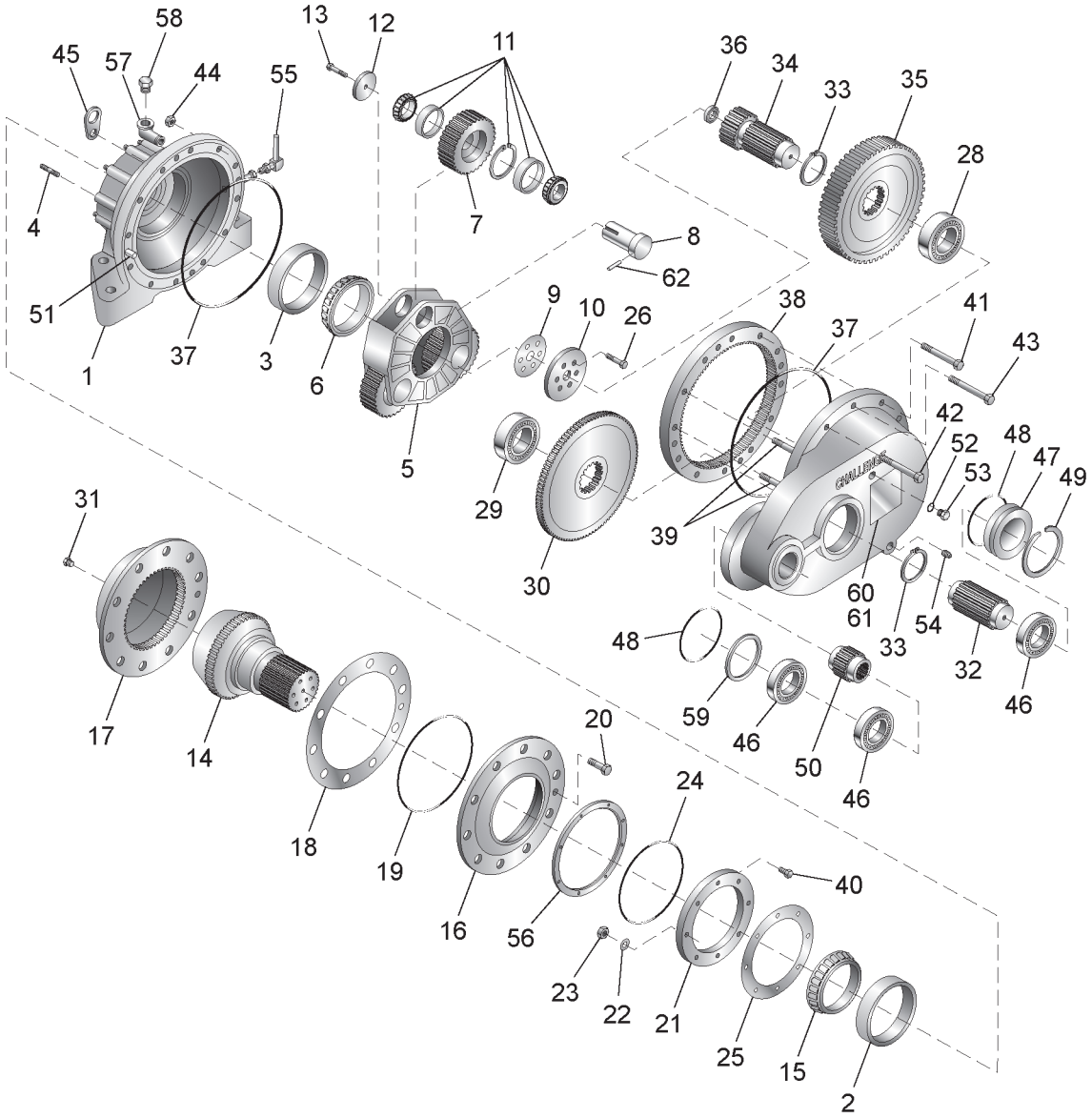

CHALLENGE MODEL 08 (12 BOLT)			
Item	MTM Part No.	ZF Part No.	Description
41.	0016253	1032054	BOLT
42.	0016697	1031852	BOLT
43.	0014710	1032056	BOLT
44.	0014724	1031896	HEX NUT
45.	NPN	5062248	BRACKET, LIFTING
46.	NLA	NLA	BEARING
47.	0016933	5062249	RETAINER-BEARING
48.	0016875	1690231	O-RING
49.	0016934	1050982	RETAINING RING
50.	0016535	1670549	SHAFT-INPUT
51.	0016391	1051036	GROOVE PIN
52.	NPN	H-70-568-114	O-RING
53.	1260628	900598-2SAD	PLUG
54.	NPN	157915	DRAIN PLUG
55.	0016593	1170261	SIGHT GAUGE
56.	0016540	5062251	RETAINER
57.	NPN	1570526	ELBOW
58.	0014632	1690909	BREATHER
59.	0016377	5062250	WASHER-SPACER
60.	NPN	5070696	NAME PLATE
61.	NPN	1030680	DRIVE SCREW
62.	0015066	1051129	ROLL PIN

CHALLENGE MODEL 08 (24 BOLT)

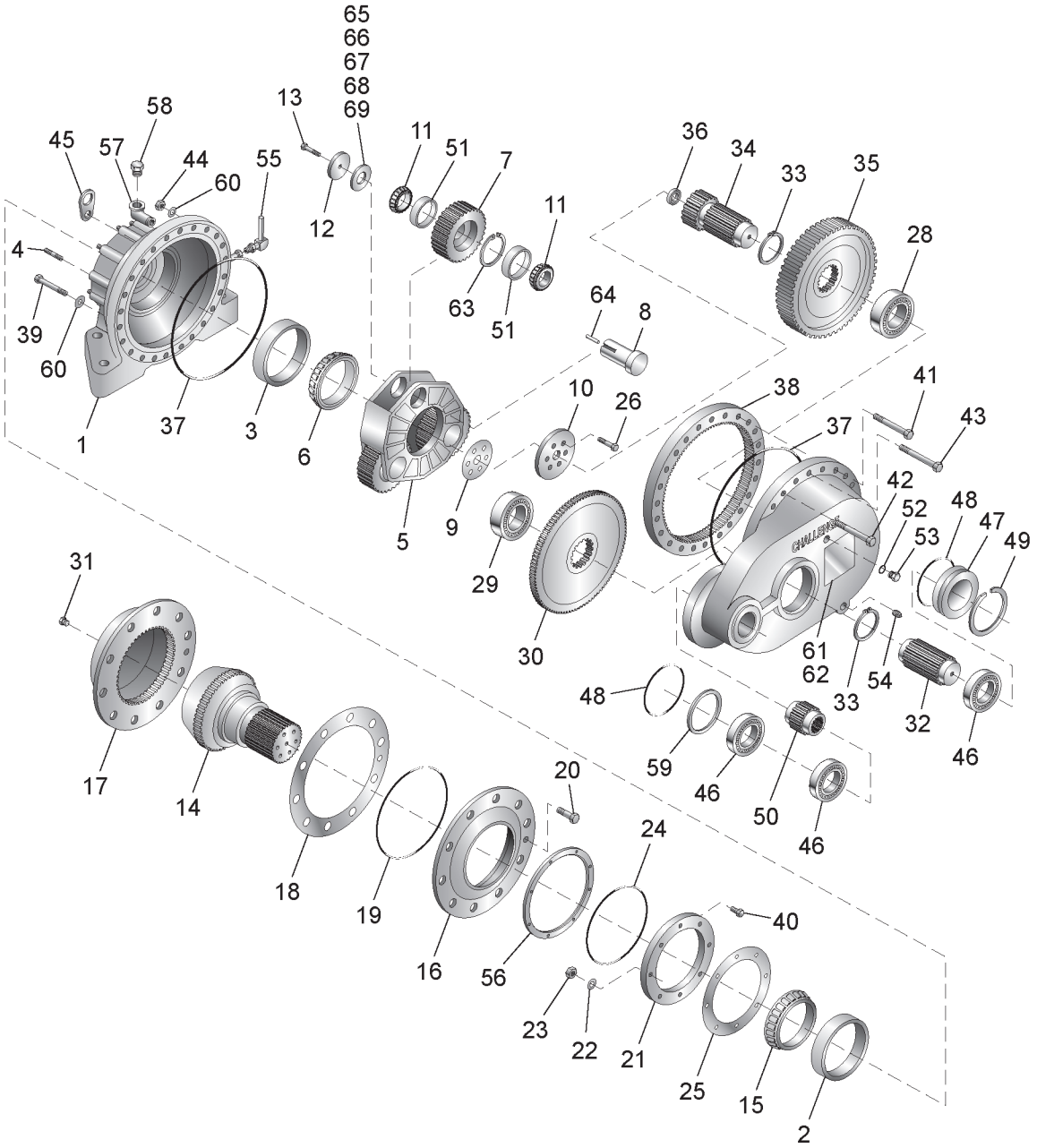

CHALLENGE MODEL 08 (24 BOLT)			
Item	MTM Part No.	ZF Part No.	Description
	0012067	5063026	GEARBOX-REBUILT
	0012066	1640320	SEAL AND SHIM KIT
	0016756	5063026	BEARING KIT
1.	NPN	5063003	HOUSING OUTPUT
2.	0016099	1300497	CUP BEARING
3.	0016082	1300496	CUP BEARING
4.	NPN	5062153	STUD
5.	NPN	5063004	CAGE-PLANETARY
6.	0016098	1300494	CONE BEARING
7.	NPN	1670653	GEAR PLANET
8.	NPN	5063007	SHAFT-PLANET GEAR
9.	NPN	4060592	SHIM KIT
10.	NLA	5062245	PLATE OUTPUT SHAFT
11.	0015225	1300578	CONE BEARING
12.	0015448	5063006	PLATE PLANET GEAR SHAFT
13.	NPN	1032522	CAP SCREW
14.	0016950	1670553	OUTPUT SHAFT
15.	0016083	1300495	CONE BEARING
16.	NPN	1670555	SOCKET FRONT, TRUNNION
17.	0016952	1670556	SOCKET REAR, TRUNNION
18.	NLA	4060034	SHIM KIT
19.	0016889	1690740	O-RING
20.	NPN	1032059	CAP SCREW
21.	0016406	5062247	RING RETAINER
22.	NPN	1050362	LOCKWASHER
23.	0120251	36204	JAM NUT
24.	0016890	5062903	O-RING SPECIFY 3/8 OR 7/16
25.	NLA	4060593	SHIM KIT
26.	0014709	1032057	HEX HEAD CAP SCREW
27.	NPN	5063022	HOUSING OUTPUT
28.	0016096	1300492	BEARING
29.	NPN	1300431	BEARING
30.	0016754	1670540	DRIVEN GEAR FIRST STAGE
31.	NPN	1573710	PLUG
32.	0016536	1670551	SHAFT SECOND STAGE
33.	0016468	1050177	SNAP RING
34.	0016532	1670538	SUN GEAR
35.	0016533	1670539	DRIVEN GEAR SECOND STAGE
36.	0016093	1300489	BEARING
37.	0016407	5062150	O-RING
38.	0014885	1670654	RING GEAR
39.	NPN	1032505	CAP SCREW
40.	0015824	1032422	CAP SCREW

CHALLENGE MODEL 08 (24 BOLT) (Continued)

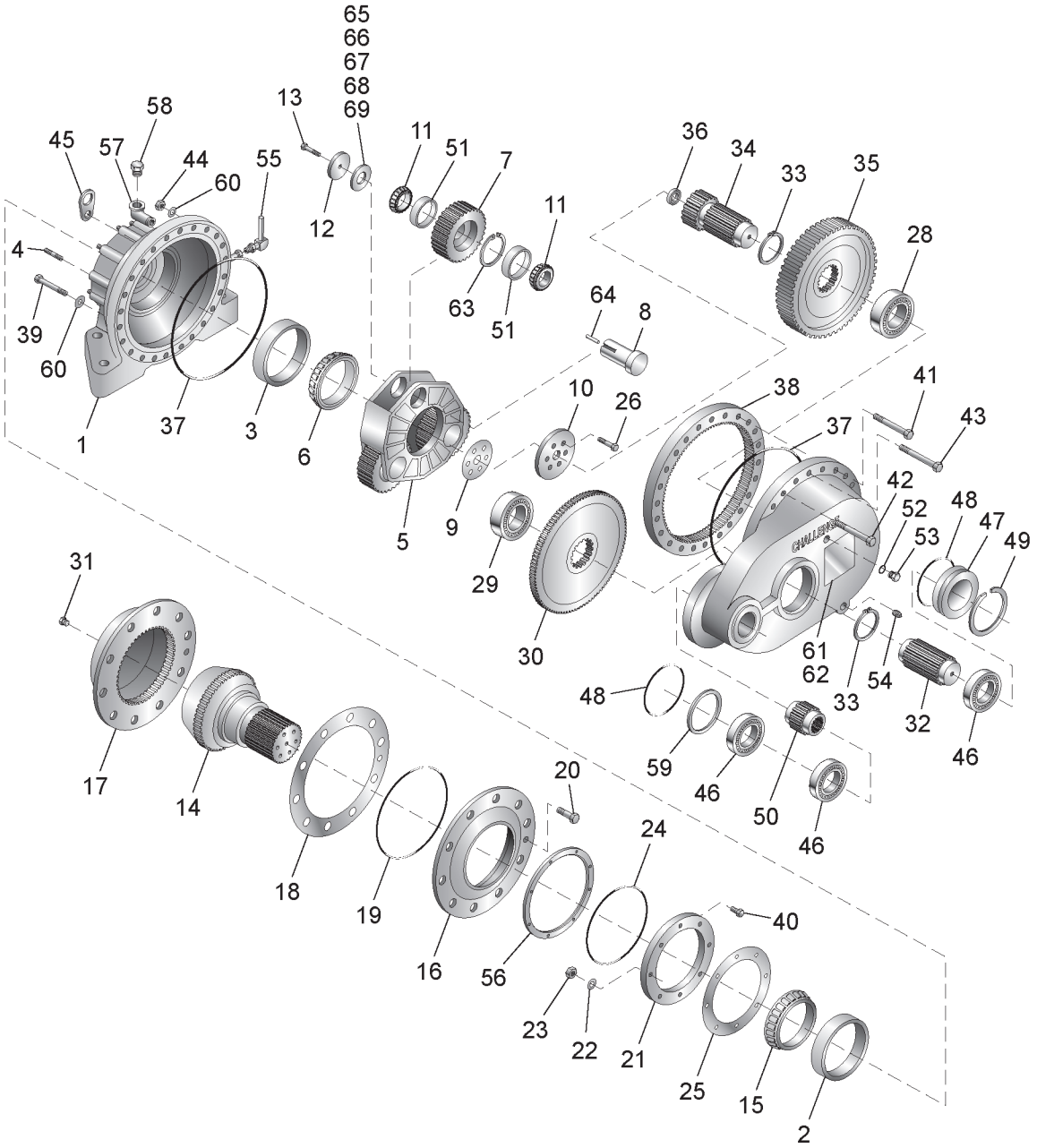

CHALLENGE MODEL 08 (24 BOLT)			
Item	MTM Part No.	ZF Part No.	Description
41.	NPN	1032508	BOLT
42.	NPN	1032507	BOLT
43.	NPN	1032509	BOLT
44.	NPN	1031825	HEX NUT
45.	NPN	5062248	BRACKET, LIFTING
46.	NPN	1300493	BEARING
47.	0016933	5062249	RETAINER-BEARING
48.	0016875	1690231	O-RING
49.	0016934	1050982	RETAINING RING
50.	0016535	1670549	SHAFT -INPUT
51.	0015228	1300579	CUP BEARING
52.	NPN	H-70-568-114	O-RING
53.	1260628	1573971	PLUG
54.	NPN	1574915	DRAIN PLUG
55.	0016593	1170261	SIGHT GAUGE
56.	0016540	5062251	RETAINER
57.	NPN	1570526	ELBOW
58.	0014632	1690909	BREATHER
59.	0016377	5062250	WASHER-SPACER
60.	NPN	1050448	WASHER
61.	NPN	5070696	NAME PLATE
62.	NPN	1030680	DRIVE SCREW
63.	0015037	1051128	RETAINING RING
64.	NPN	1051186	DOWEL PIN
65.	NPN	1691021	SHIM PLANET GEAR, .002
66.	NPN	1691022	SHIM PLANET GEAR, .003
67.	NPN	1691023	SHIM PLANET GEAR, .005
68.	NPN	1691024	SHIM PLANET GEAR, .010
69.	NPN	1691025	SHIM PLANET GEAR, .020

CHALLENGE MODEL 8YH

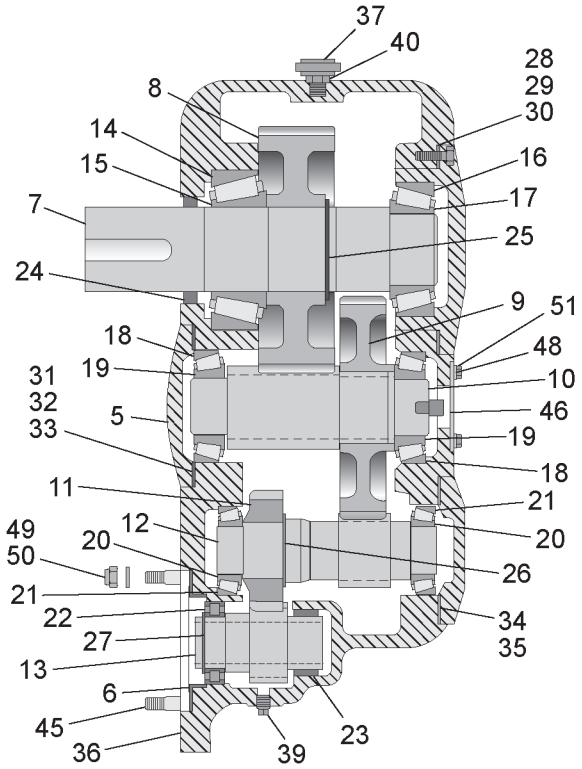

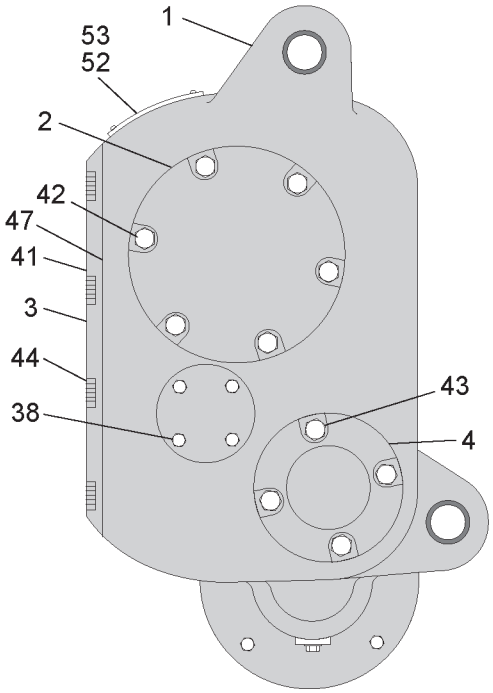

CHALLENGE MODEL 8YH			
Item	MTM Part No.	ZF Part No.	Description
	NPN	5006191	GEARBOX REBUILT
	NPN	5061096	HOUSING
	0014482	5060807	CARRIER
1.	NPN	5060054	COVER
2.	NPN	5061098	CAP
3.	NPN	5060808	CAP
4.	0015403	5061097	LOCK RING
5.	0016530	1670261	SHAFT OUTPUT
6.	0016531	1670264	GEAR OUTPUT-53T
7.	NPN	1670262	GEAR, LOW SPEED-55T
8.	0016901	1670356	PINION, LOW SPEED-15T
9.	NPN	1670327	GEAR, HIGH SPEED-28T
10.	0016900	1670328	PINION, HIGH SPEED-16T
11.	NPN	1670329	PINION, INPUT-19T
12.	0015256	1300047	CUP BEARING
13.	0015232	1300191	CONE BEARING
14.	0005711	1300189	CUP BEARING
15.	NPN	1300190	CONE BEARING
16.	NPN	1300192	CUP BEARING
17.	0045285	1300193	CONE BEARING
18.	0015238	1300195	CUP BEARING
19.	NPN	1300194	CUP BEARING
20.	0015270	1300300	BEARING
21.	0015239	1300301	BEARING
22.	0015469	1690016	SEAL
23.	0012903	1050786	SNAP RING
24.	0015763	1050602	SNAP RING
25.	0015065	1050601	SNAP RING
26.	0016317	1690069	SHIM .010
27.	NPN	1690412	SHIM .005
28.	NPN	1690413	SHIM .007
29.	0016315	1690071	SHIM .010
30.	0015378	1690411	SHIM .005
31.	NPN	1690415	SHIM .007
32.	NPN	1690439	SHIM .005
33.	NPN	1690438	SHIM .010
34.	NPN	1690440	GASKET
35.	NPN	1690018	BREATHER
36.	NPN	1031267	BOLT
37.	NPN	1570052	PLUG
38.	NPN	1570464	PIPE BRUSHING
39.	NPN	1690142	SIGHT GAUGE
40.	NPN	1030887	CAP SCREW
41.	NPN	1030886	CAP SCREW

CHALLENGE MODEL 8YH (Continued)

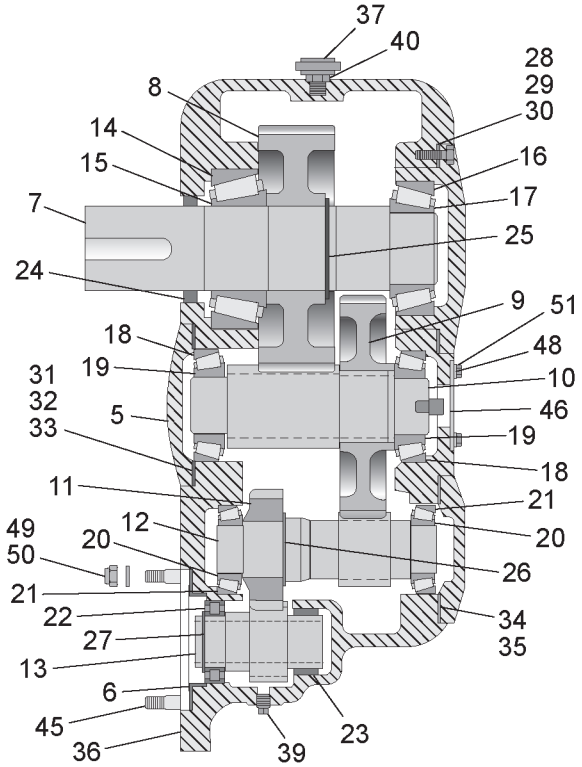

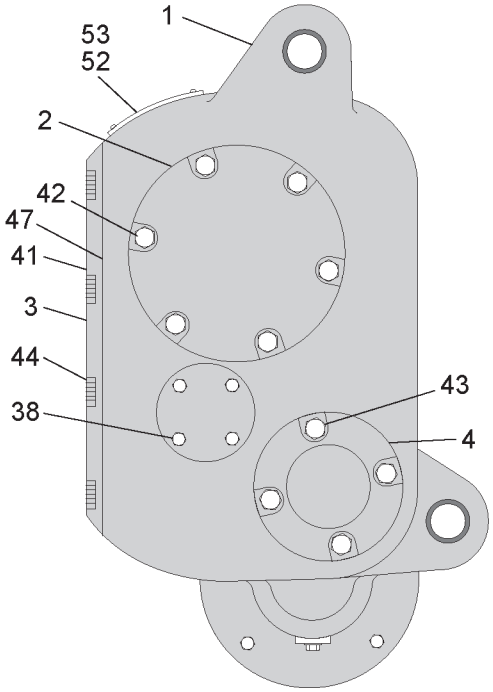

CHALLENGE MODEL 8YH			
Item	MTM Part No.	ZF Part No.	Description
42.	NPN	1030056	CAP SCREW
43.	NPN	1031247	STUD
44.	NPN	5061169	COUPLING
45.	0016306	1690250	GASKET
46.	NPN	1690503	GASKET
47.	NPN	1030293	LOCK NUT
48.	NPN	1050273	WASHER
49.	0015405	5061180	COVER
50.	NPN	5070696	NAME PLATE
51.	0015809	1030680	DRIVE SCREW
52.	0015190	1690503	GASKET
53.	NPN	1030293	LOCK NUT
54.	0012937	1050273	WASHER
55.	0015405	5061180	COVER
56.	NPN	5070696	NAME PLATE
57.	NPN	1030680	DRIVE SCREW

THIS PAGE INTENTIONALLY LEFT BLANK

Chute Lifters

M-719 DYNA CHUTE

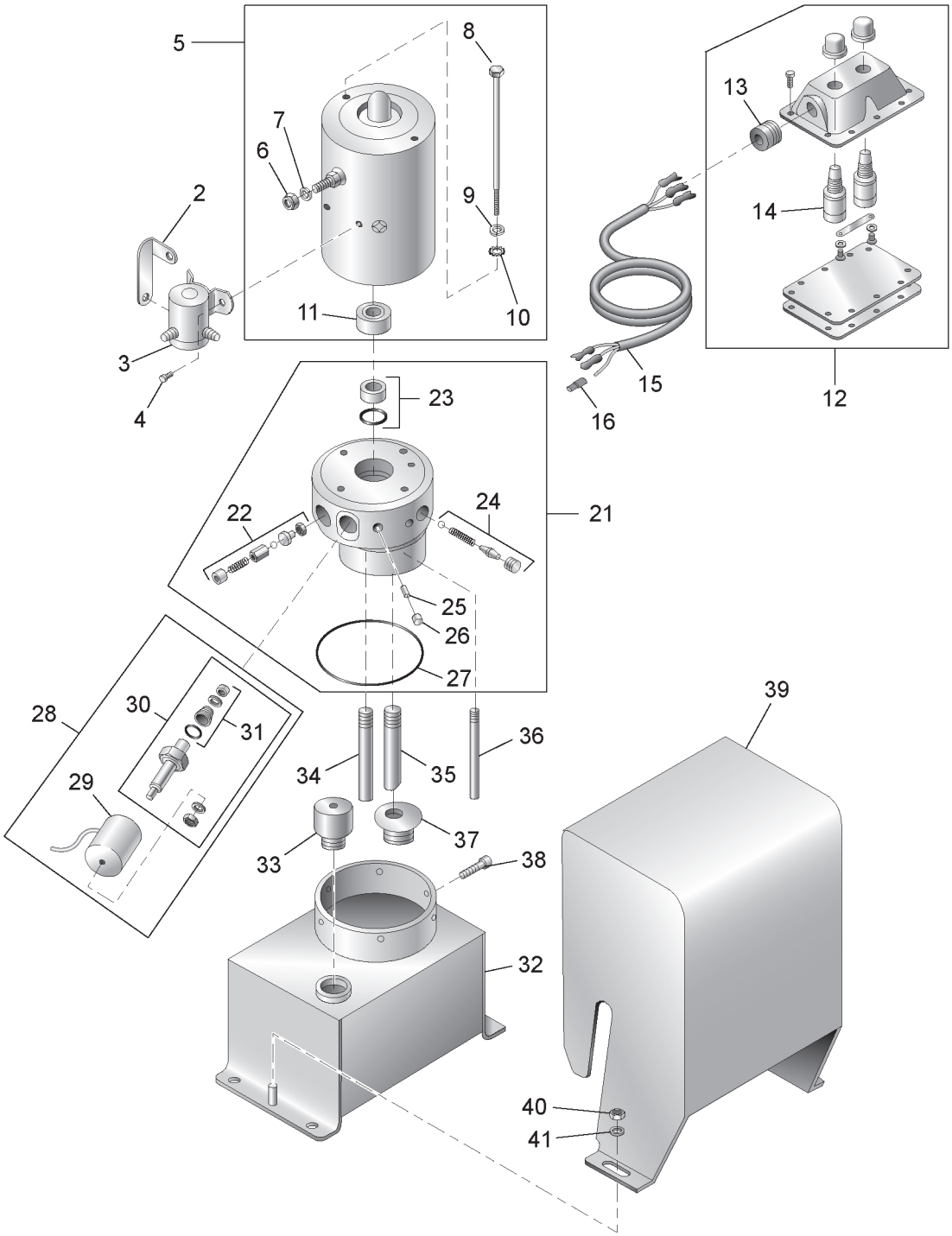

M-719 DYNA CHUTE		
Item	**MTM Part No.**	**Description**
	0106792	CHUTE LIFTER
2.	0106758	STRAP - MOTOR, SOLENOID CONNECTING
3.	NPN	SWITCH - SOLENIOD, 12VDC 3 POST
4.	NPN	SCREW - ROUND HEAD MACHING, 10-32X1/4”
5.	0110015	MOTOR - ELECTRIC, 12VDC
6.	NPN	NUT - HEX, 5/8”-24
7.	NPN	WASHER - LOCK, 5/16”
8.	NPN	SCREW - HEX HEAD CAP, 1/4”-20X6.5”
9.	NPN	WASHER - LOCK, 5/16”
10.	NPN	WASHER - STAR, 1/4”
11.	0106701	BEARING - BASE MOTOR
12.	0110180	BOX ASSY - PUSH BUTTON
13.	0110182	STRAIN RELIEF - PLASTIC
14.	0110184	SWITCH - PUSH BUTTON, 2 TERMINAL
15.	NPN	CORD - HARNESS
16.	NPN	TERMINAL - CLOSE END
21.	0106793	PUMP ASSY - GEAR, CODE 51
22.	0001675	PARTS KIT - VALVE ASSY, RELIEF VALVE
23.	0106705	PARTS KIT - SEAL AND GASKET
24.	1419362	REPAIR KIT - RELIEF VALVE
25.	0107052	PLUG - ORIFICE, #53, DRILL 1/16”-27 NPTF
26.	NPN	PLUG - PIPE FINISH, 1/8” NPTF
27.	NPN	O-RING - INDUSTRIAL, 5/8”X 3-7/8 X1/8”
	1334418	COIL AND CARTRIDGE (USE IN PLACE OF ITEMS 28-30)
28.	0106794 - NLA	VALVE - 2 WAY 2 POSITION, 12 VDC
29.	0106749 - NLA	COIL - 12VDC, 2 WAY 2 POSITION
30.	0106795 - NLA	CARTRIDGE - 2 WAY 2 POSITION, 12VDC
31.	0106747	PARTS KIT - 2 WAY 2 POSITION VALVE
32.	0106796	RESERVOIR - DYNA CHUTE
33.	0106753	PLUG - VENT, PLASTIC
34.	NPN	TUBE - RETURN, 1/4” NPT X 4” PLAS TIC
35.	0106751	TUBE - FILTER SUCTION, 3/8” NPT X3.5”
36.	0001670	TUBE - RETURN, 1/8” NPT X 4” PLASTIC
37.	0106752	SCREEN - FILTER, SUCTION
38.	0101018	SCREW - THREADED FORMING, 10-24 X 3/8”
39.	0106760	COVER - PROTECTIVE, STEEL
40.	NPN	NUT - LOCK, HEX, 5/16”-18
41.	NPN	WASHER - FLAT, 5/16”

M-721 DYNA CHUTE

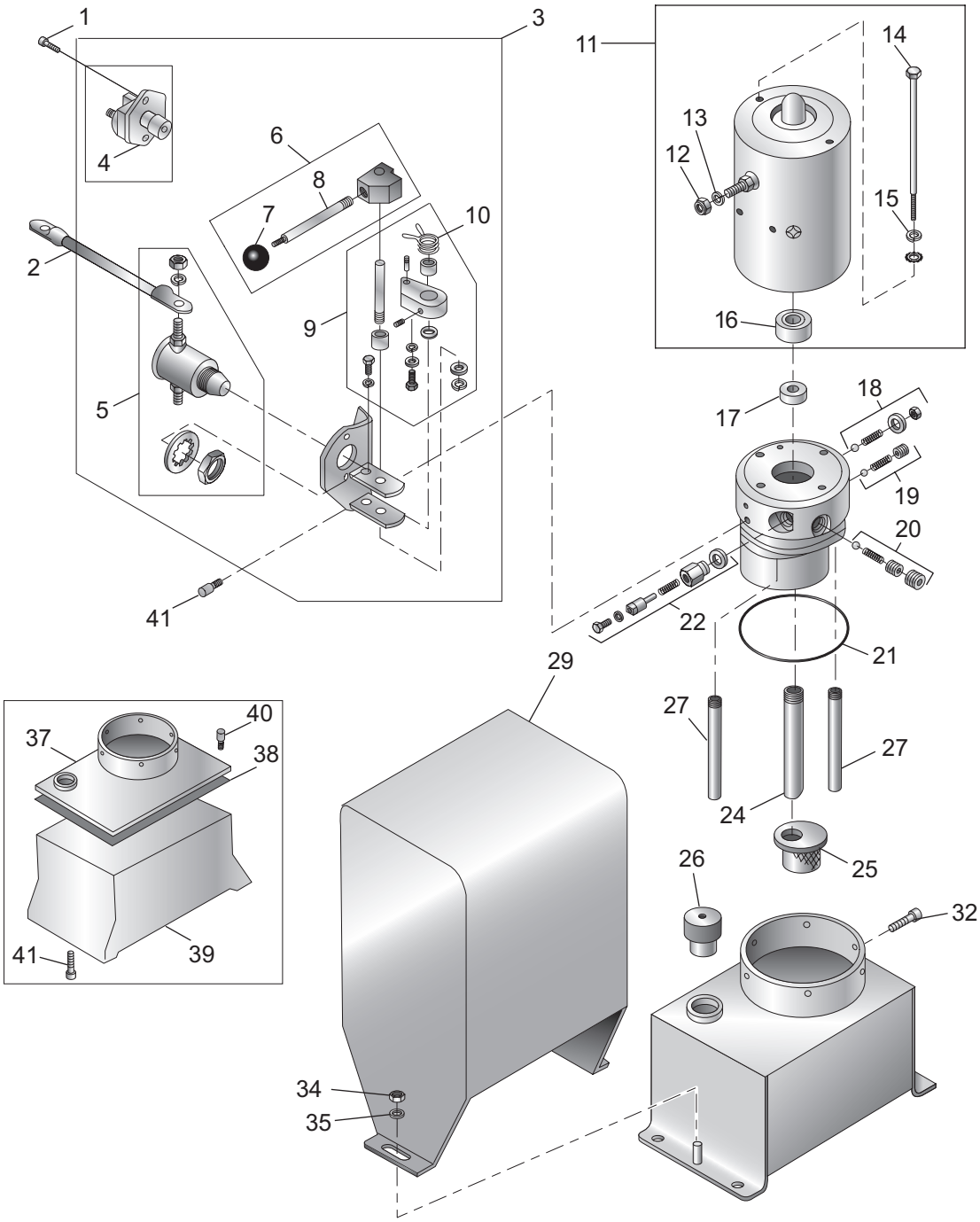

M-721 DYNA CHUTE		
Item	MTM Part No.	Description
	0106770	CHUTE LIFTER
1.	NPN	SCREW - HEX WASHER, 1/4-20 X 1/2”
3.	NPN	CABLE
4.	0106773	SWITCH ASSY - START
5.	0106788	SWITCH ONLY - START
6.	0106784	SWITCH - START, CANISTER TYPE
7.	NPN	BRACKET ASSY
8.	0106775	HANDLE ASSY
9.	0106776	BALL - PLASTIC
10.	0106777	HANDLE - ROD, 4”
11.	NPN	BRACKET ASSY KTI
12.	0106781	SPRING - TORSION
13.	0110015	MOTOR - ELECTRIC, 12VDC
14.	NPN	NUT - HEX, 5/16-24
15.	NPN	WASHER - LOCK, 5/16”
16.	NPN	SCREW - HEX HEAD CAP, 1/4-20 X 6.5”
17.	NPN	WASHER - LOCK
18.	NPN	WASHER - STAR, 5/16’
19.	0106701	MOTOR - BEARING BASE
20.	NPN	PUMP ASSY - GEAR
21.	0106705	SEAL AND GASKET KIT
22.	1419362	REPAIR KIT - RELIEF
23.	0106717	VALVE KIT - CHECK (NOT SHOWN)
24.	0106769	VALVE KIT - CHECK, MAIN
25.	0106750	O-RING - INDUSTRIAL, 3-5/8” X 3-7/8 X 1/8”
26.	0106763	PLUNGER KIT
27.	0001670	TUBE - RETURN, PLASTIC, 1/8” NPT X 4”
28.	0106751	TUBE - FILTER SUCTION, 1/8” NPT X 3.5”
29.	0106790	COVER
30.	0106753	PLUG - VENT, PLASTIC
31.	0106752	SCREEN - FILTER, SUCTION
32.	0101018	SCREW - THREAD FORMING, 10-24 X 3/8”
33.	NPN	RESERVOIR - DYNA CHUTE
34.	NPN	NUT - HEX, 5/16”-18
35.	NPN	WASHER - FLAT, 5/16”
36.	NPN	STUD - SPECIAL, 5/16-18 X 1”
37.	0106756	RESERVOIR - DYNA CHUTE, ALUM
38.	0106755	GASKET - RESERVOIR
39.	NPN	COVER ASSY
40.	NPN	SCREW - SOCKET HEAD, 1/4-20 X 3/4”
41.	NPN	SCREW - SOCKET, WASHER HEAD

M-723 DYNA CHUTE

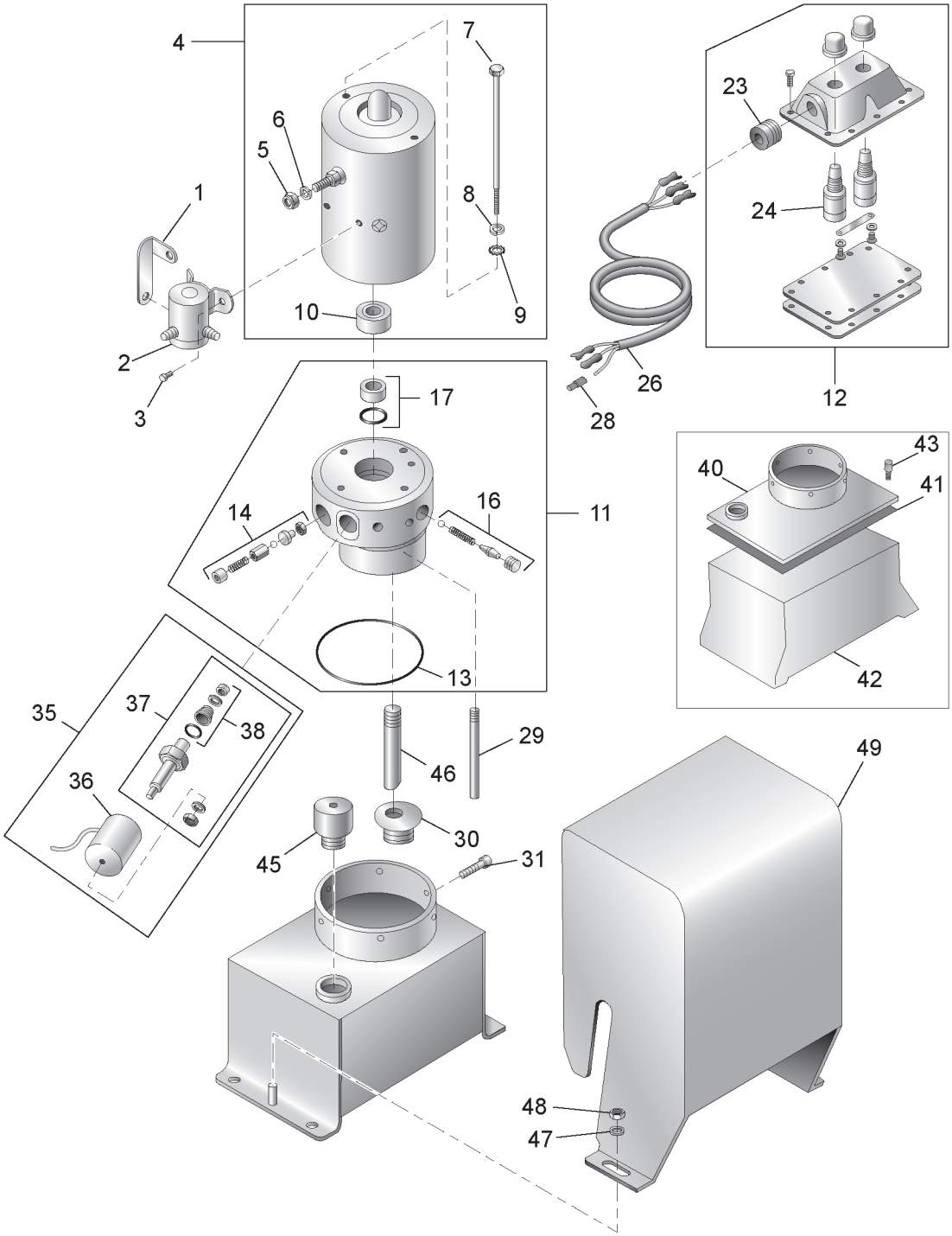

M-723 DYNA CHUTE		
Item	**MTM Part No.**	**Description**
	0106792	CHUTE LIFTER
1.	0106758	STRAP - MOTOR, SOLENOID CONNECTING
2.	0001619	SWITCH - SOLENOID, 12 VDC, 3 POST
3.	NPN	SCREW - ROUND, MACHINE HEAD, 10-32 X 1/4”
4.	NPN	MOTOR - ELECTRIC, 12 VDC
5.	NPN	NUT - HEX, 5/16-24
6.	NPN	WASHER - LOCK
7.	NPN	SCREW - HEX HEAD
8.	NPN	WASHER - STAR, 1/4”
9.	NPN	WASHER - LOCK, 1/4”
10.	0106701	BEARING - BASE, MOTOR
11.	0106702	PUMP ASSY
12.	0106707	PARTS KIT - MANUAL OVERRIDE (NOT SHOWN)
13.	0106750	O-RING - INDUSTRIAL, 3-5/8 X 3-7/8 X 1/8”
14.	0001675	PARTS KIT - VALVE ASSY, POPPET/BALL
15.	0106717	PARTS KIT - CHECK VALVE (NOT SHOWN)
16.	1419362	REPAIR KIT - RELIEF VALVE
17.	0106705	PARTS KIT - SEAL AND GASKET
22	0110180	BOX ASSY - PUSH BUTTON
23.	0110182	STRAIN RELIEF - PLASTIC
24.	0110184	SWITCH - PUSH BUTTON, 2 TERMINAL
26.	NPN	CORD - HARNESS
27.	0106739	FITTING - STRAIN RELIEF, SLOTTED (NOT SHOWN)
28.	NPN	TERMINAL - CLOSED END
29.	0001670	TUBE - RETURN, PLASTIC, 1/8” NPT X 4”
30.	0106752	SCREEN - FILTER, SUCTION
31.	0101018	SCREW - TREAD FORMING, 10-24 X 3/8”
32.	0001671	FILTER ASSY, INLINE, 4 5/8” LONG (NOT SHOWN)
33.	NPN	PARTS KIT - GASKET AND FILTER (NOT SHOWN)
34.	0106745	VALVE ASSY - COMPLETE, 12 VDC
	1334418	COIL AND CARTRIDGE (USE IN PLACE OF ITEMS 35-37)
35.	0106794 - NLA	VALVE - 2 WAY 2 POSITION, 12 VDC
36.	0106749 -NLA	COIL - 2 WAY 2 POSITION, 12 VDC
37.	0106795 - NLA	CARTRIDGE - 2 WAY 2 POSITION
38.	0106747	PARTS KIT - 2 WAY 2 POSITION
39.	NPN	STUD - SPECIAL, 5/16-18 X 1”
40.	0106756	RESERVOIR - ALUMINUM
41.	0106755	GASKET - RESERVOIR
42.	NPN	COVER ASSY - RESERVOIR
43.	NPN	SCREW - SOCKET HEAD CAP, 1/4-20 X 3/4”
45.	0106753	PLUG - VENT, PLASTIC
46.	0106751	TUBE - FILTER, SUCTION, 3/8 NPT X 3”
47.	NPN	WASHER - FLAT
48.	NPN	NUT - HEX, 5/16-18
49.	0106760	COVER - PROTECTIVE STEEL

THIS PAGE INTENTIONALLY LEFT BLANK

Brackets

ADVANCE / TEREX

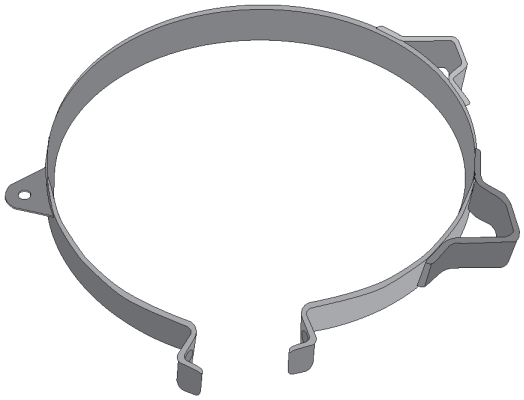

BRACKET - RESERVOIR, 14", w/TAB,BM

0182615 MTM

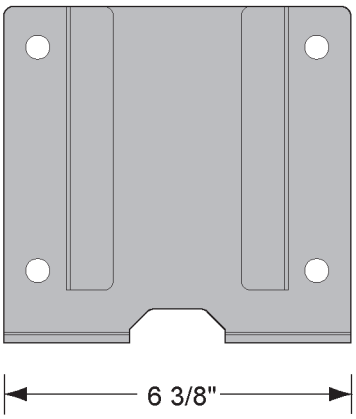

HOLDER - PENDANT, REAR

1321899 MTM 41424 TEREX

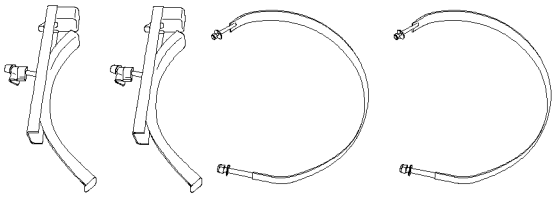

STRAP/BRACKET - FUEL TANK, 28" DIA (PER SET)

1226408 MTM 13187/13188 ADV

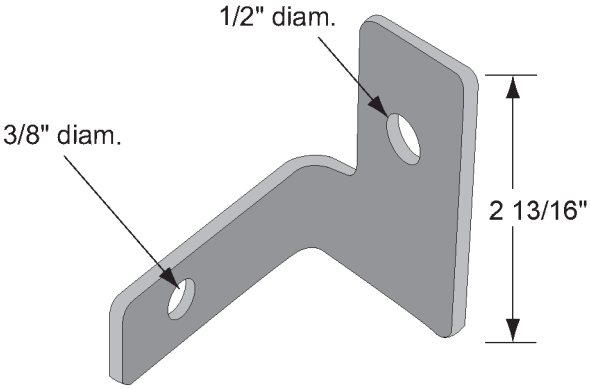

BRACKET - SENSOR, MAGNETIC

1235162 MTM 16616 TEREX

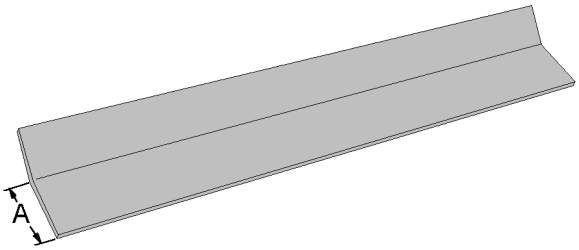

BRACKET - MUDFLAP ANGLE, 4 AXLE, A = 1-1/2"

1143217 MTM 11308 ADV

BRACKET - MUDFLAP ANGLE, 5 AXLE, A = 5-3/8"

1143219 MTM 11380 ADV

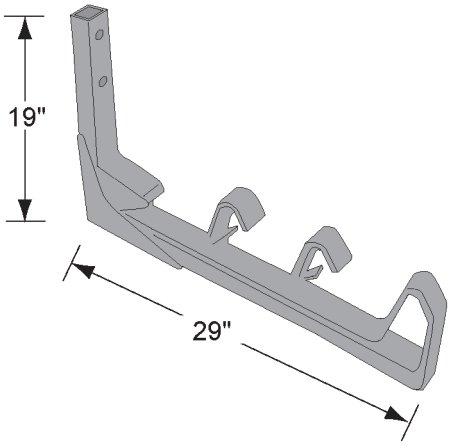

BRACKET - 3 CHUTE, L TYPE

0152930 MTM 40909 TEREX

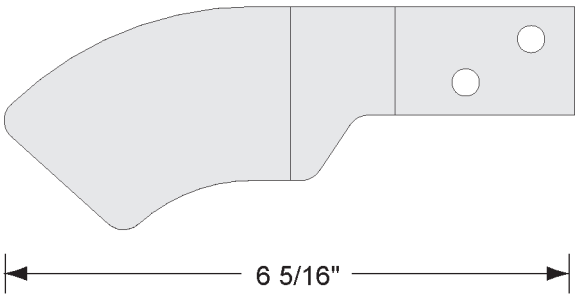

PLATE - SENSOR, TARGET

0189054 MTM 40748 TEREX

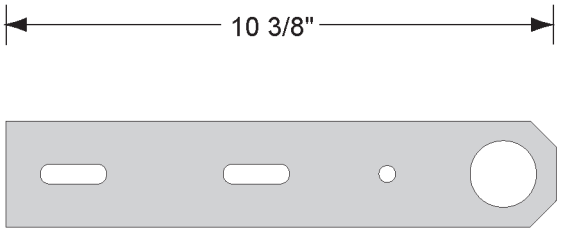

BRACKET - MOUNTING, SENSOR

0189053 MTM 40959 TEREX

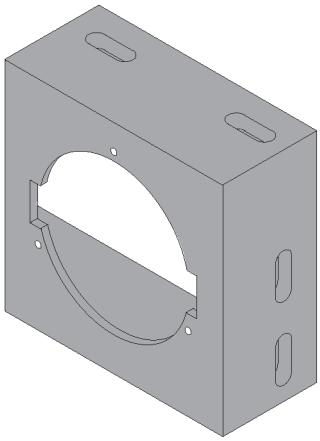

BOX - MOUNT, BM GAUGE

0085089 MTM 40426 TEREX

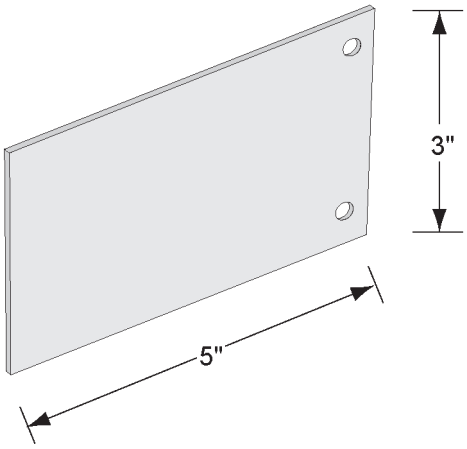

PAD - STOP, TRAILER AXLE, 3/4”

0189058 MTM 40188 TEREX

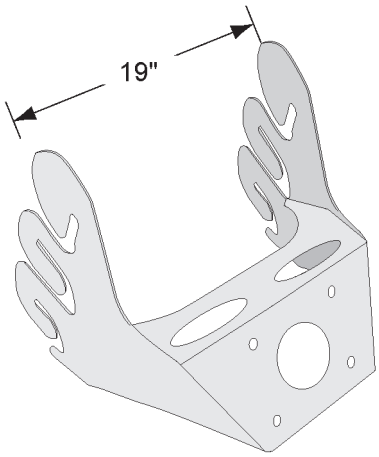

HANGER - 3 CHUTE, VERTICAL

1503879 MTM 40285 TEREX

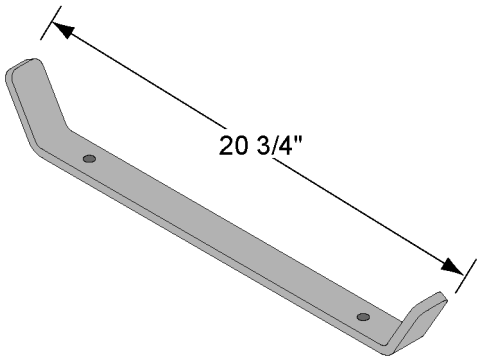

SUPPORT - HANGER, CHUTE

0150359 MTM 40288 TEREX

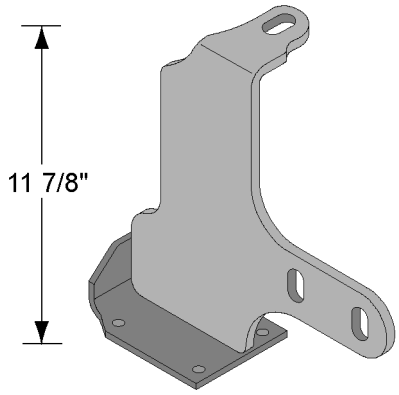

BRACKET - MTG, FDR, LH, BM AXLE, TEREX

1330302 MTM 41979 TEREX

BRACKET - MTG, FDR, RH, BM AXLE, TEREX

1330303 MTM 41978 TEREX

CBMW

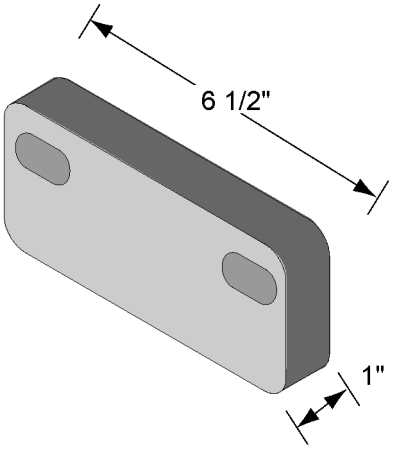

SPACER - ROLLER, PLATE

1331437 MTM 90353003 CBMW

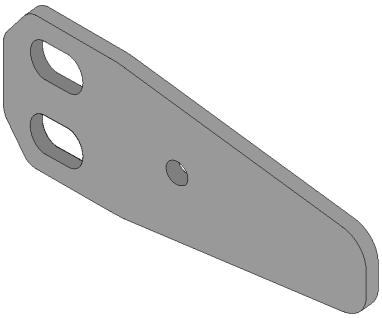

BRACKET - FRONT PED MOUNTING

1332105 MTM 90600105 CBMW

CCB

BRACKET - CHUTE, STANDARD

0013313 MTM 5041413 CCB

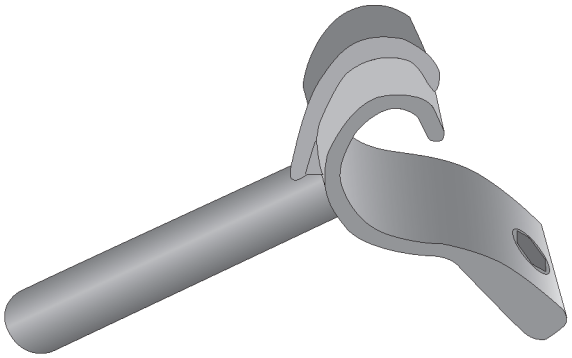

HOLD DOWN - CHUTE, HANDLE

0082650 MTM 5040845 CCB

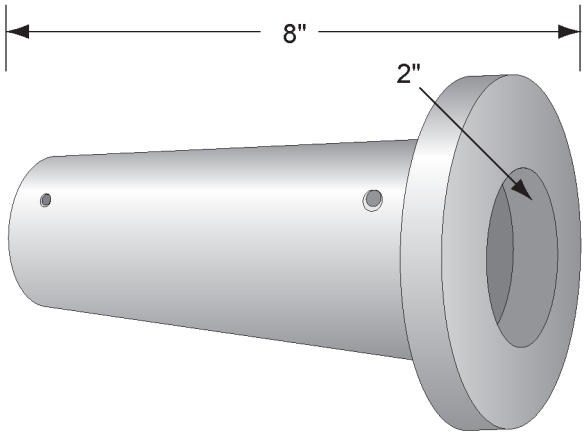

HOUSING - PIVOT

0016455 MTM 5027115 CCB

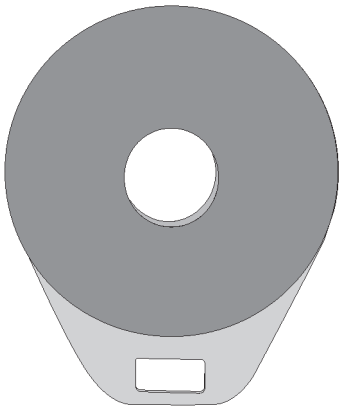

LOCK PLATE - CHUTE, w/PAD

1170292 MTM 5040849 CCB

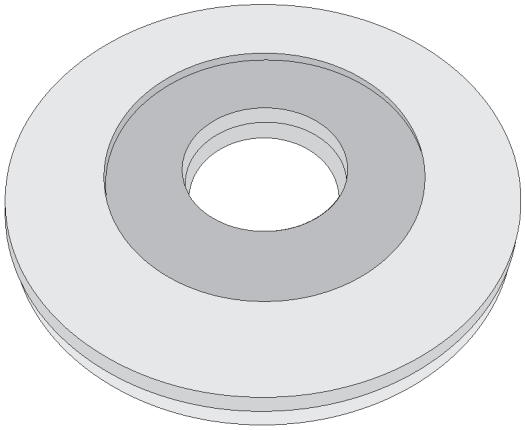

PISTON - BRAKE

0016422 MTM 5041915 CCB

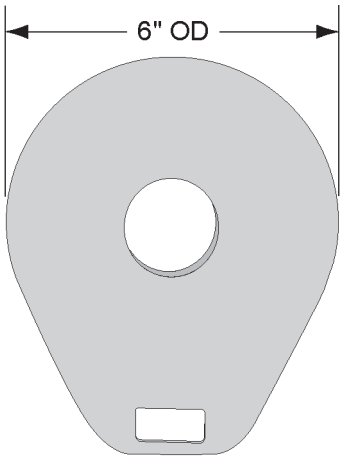

PLATE - CHUTE LOCK BARE

0016426 MTM 5041067 CCB

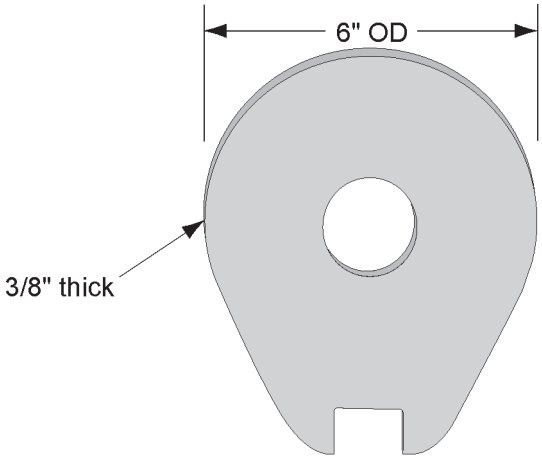

PLATE - CHUTE LOCK, TOP BRAKE

0016428 MTM 5040137 CCB

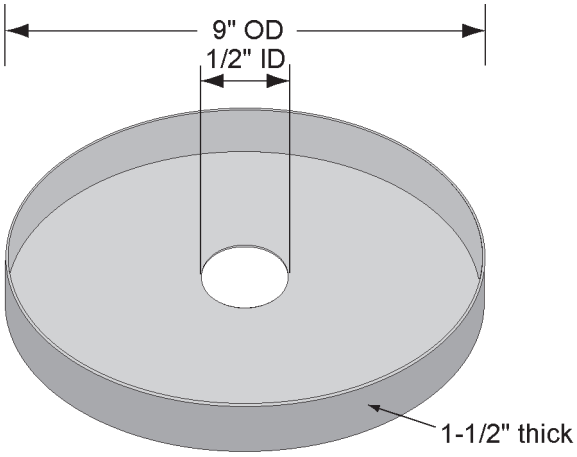

COVER - CHUTE LOCK BRAKE

0016447 MTM 5041374 CCB

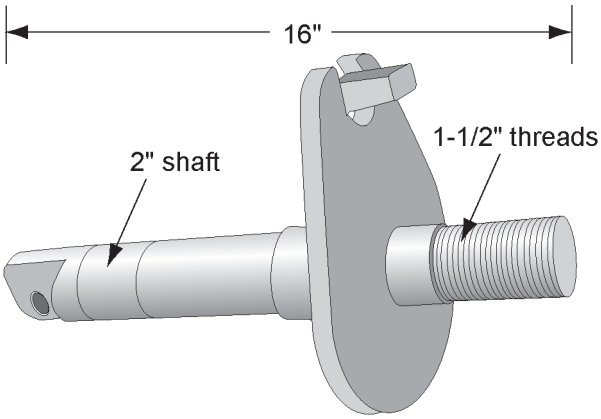

SHAFT - PIVOT

0016450 MTM 5040852 CCB

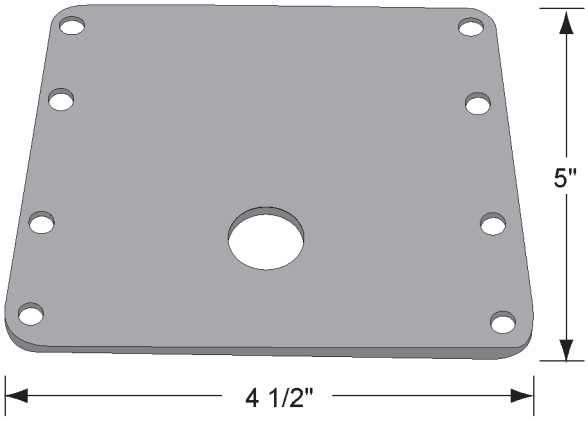

BRACKET - MOUNTING, PEDESTAL FRAME

0015350 MTM 5023289 CCB

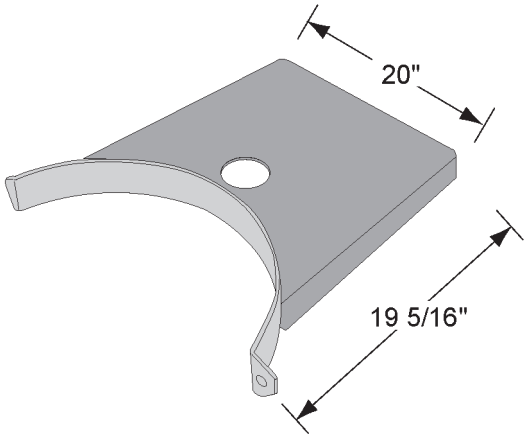

STAND - TANK, WATER, X-MOUNT

0014178 MTM 5051978 CCB

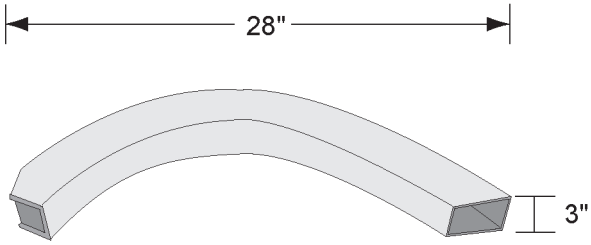

BRACKET - MOUNTING, WATER TANK

0011873 MTM 1400424 CCB

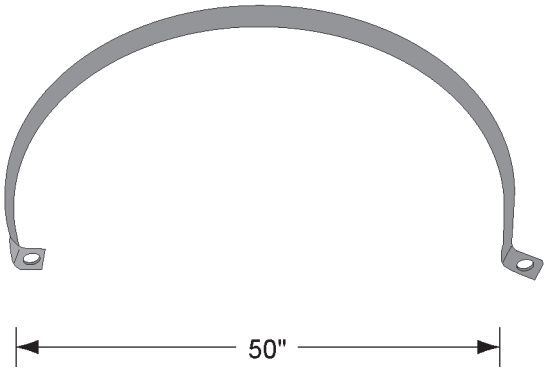

STRAP - BRACKET

0012637 MTM 5052111 CCB

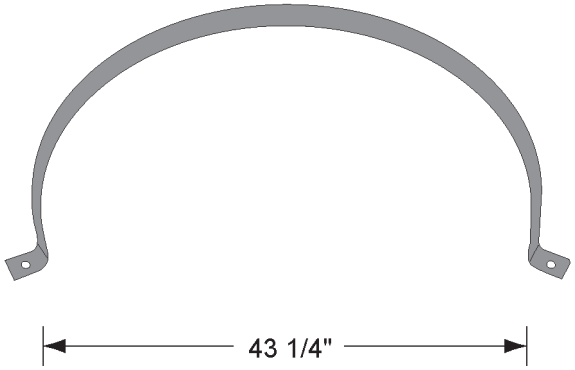

STRAP - TANK, STEEL, X-MOUNT

0014174 MTM 5023100 CCB

KIMBLE

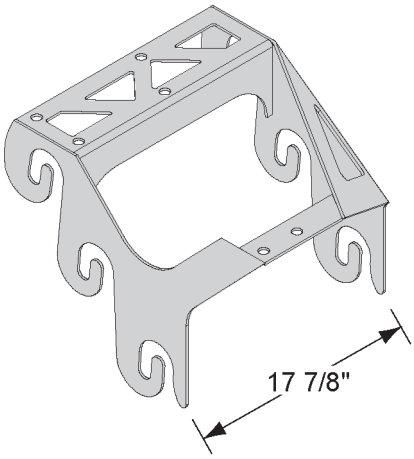

HANGER - 3 CHUTE, NARO

1330918 MTM S03-00BF0-00 KIMBLE

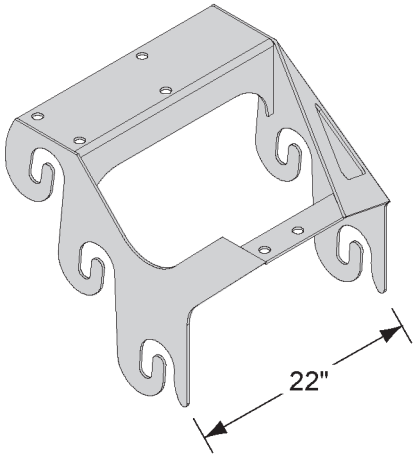

HANGER - 3 CHUTE

1330859 MTM S03-00CC00-00 KIMBLE

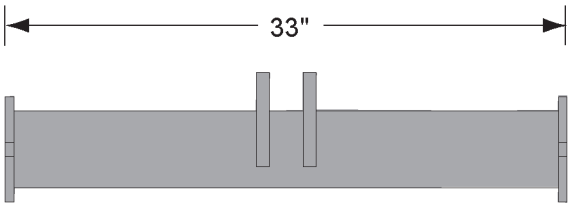

MOUNT - CYLINDER

1156449 MTM S12-00BL0-00 KIMBLE

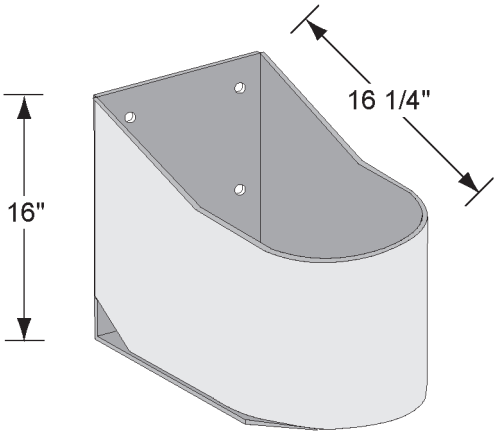

HOLDER - BUCKET, ALUM

1108359 MTM S12-00CM0-00 KIMBLE

HOLDER - BUCKET, STEEL

1114080 MTM

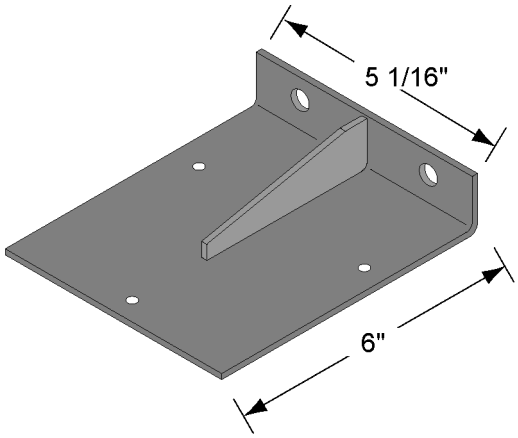

BRACKET - STROBE LT, WLDT, KIMBLE

1333603 MTM

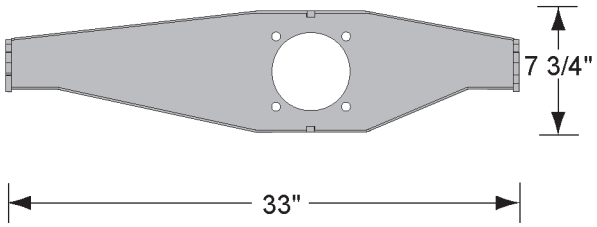

MOUNT - PUMP

1156444 MTM S012-280 KIMBLE

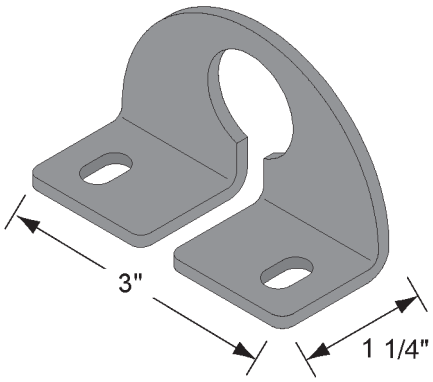

BRACKET - HPR SENSOR, KIMBLE

1332564 MTM S13-00550-00 KIMBLE

LONDON

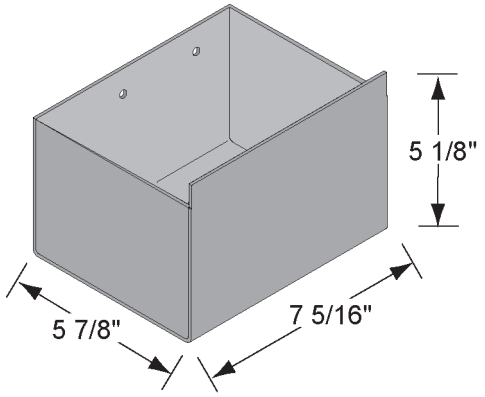

COVER - HYD MFD, WLDT, KIMBLE

1334479 MTM

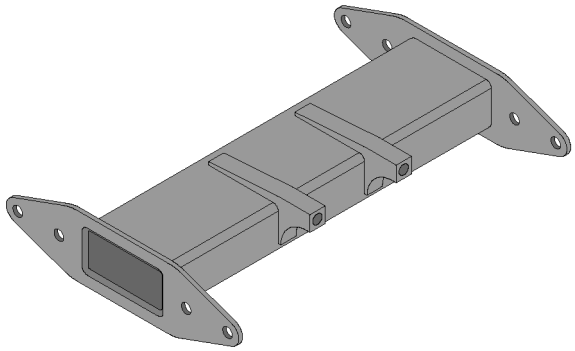

CYLINDER MOUNT

1339446 MTM S12-00CC0-00 KIMBLE

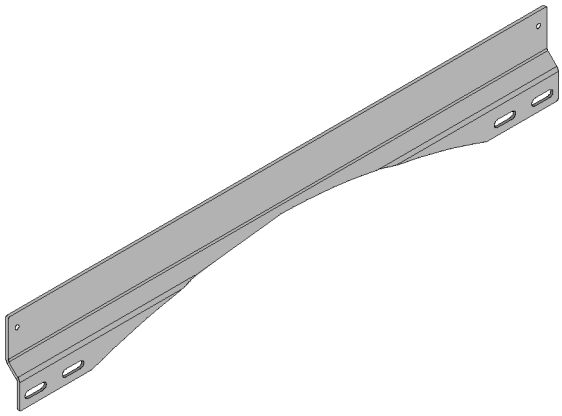

BRKT,SIGHT GA,WLDT

1339447 MTM S17-00250-00 KIMBLE

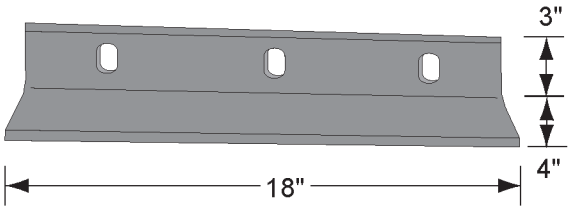

MOUNT - ANGLE, LOWER

1255587 MTM MB-38395 LONDON

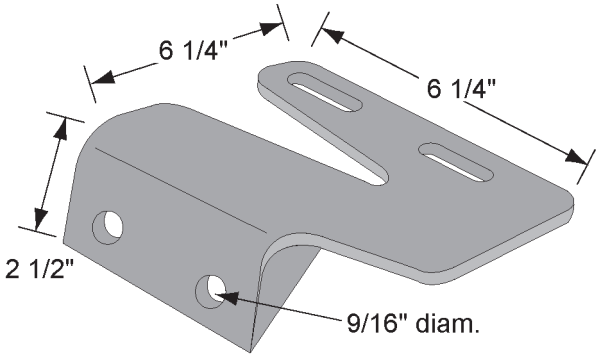

ADAPTER - FENDER, CENTER

1330310 MTM MB-38970 LONDON

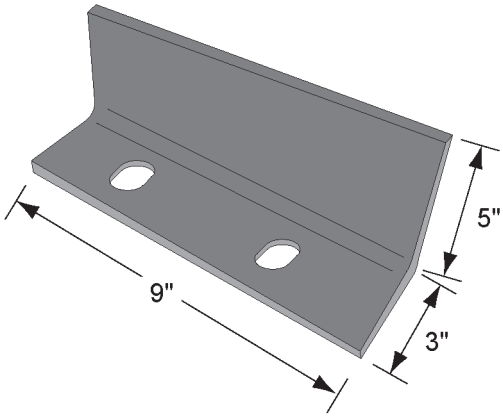

ANGLE - MOUNTING, LOWER

1331198 MTM MB-39178 LONDON

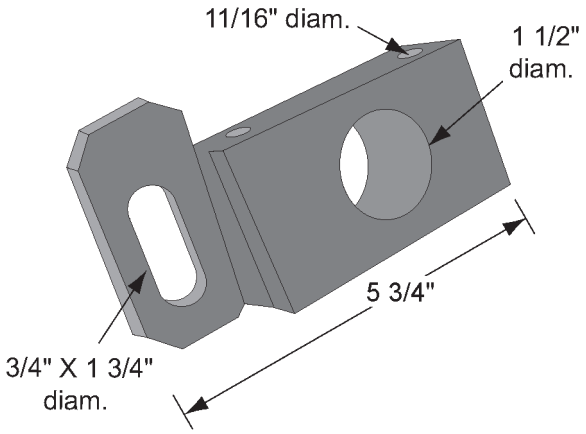

BLOCK - PIVOT, AXLE LATCH

1331091 MTM MB-39305 LONDON

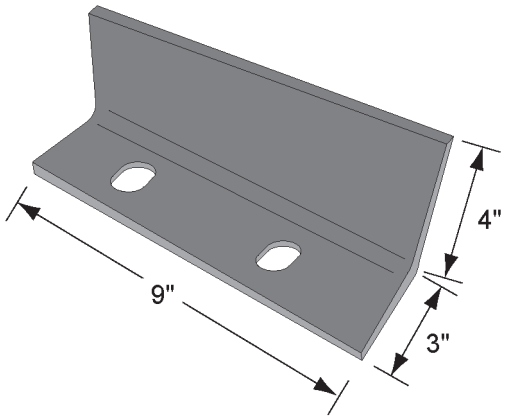

ANGLE - MOUNTING, UPPER

1331200 MTM MB-40460 LONDON

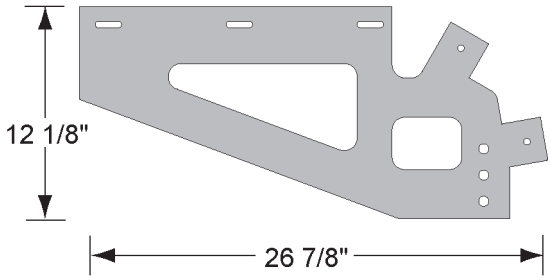

SUPPORT - FENDER, CENTER, T-RIDE

1321927 MTM MB-40965 LONDON

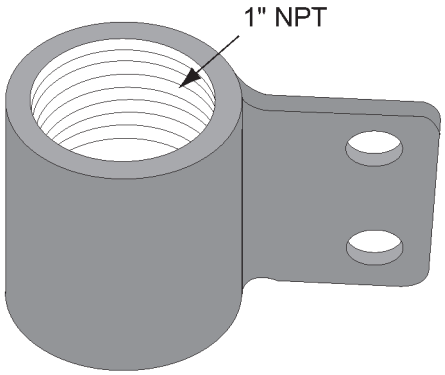

MOUNT - HOSE

1331197 MTM MA-35521 LONDON

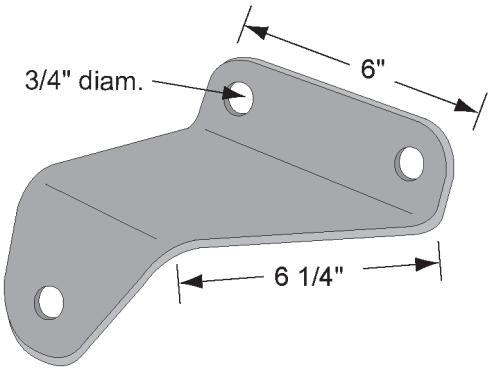

BRACKET - MOUNTING, SLUMP METER

1331670 MTM MB-38709 LONDON

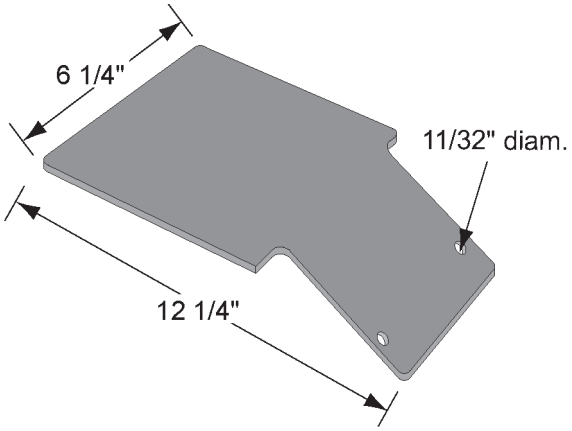

BRACKET - VALVE, PRV2

1331674 MTM MA-37757 LONDON

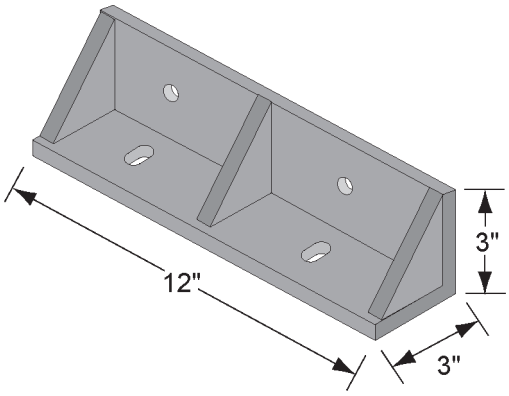

TIE DOWN - UPPER, W/ GUSSETS

1255562 MTM MB-36293-01 LONDON

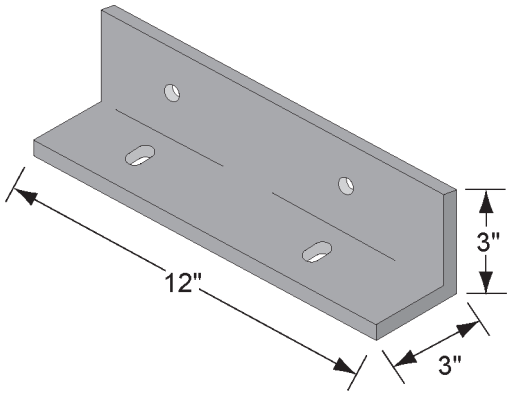

TIE DOWN - UPPER, W/O GUSSETS

1255564 MTM MB-36293-02 LONDON

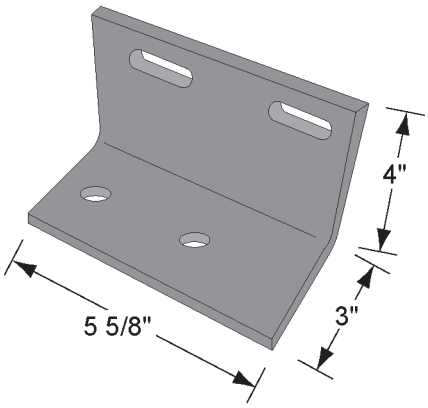

ADAPTER - CENTER, FENDER

1331673 MTM MB-38185 LONDON

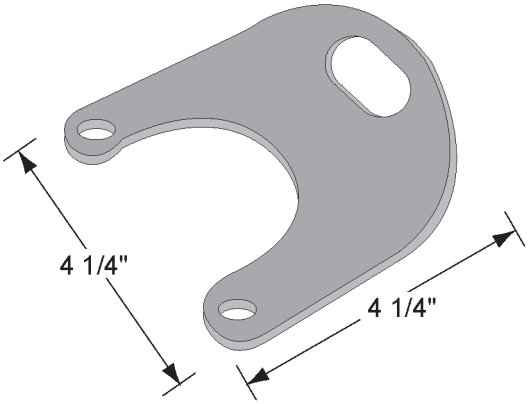

BRACKET - MOUNTING, PROXIMITY SWITCH

1331672 MTM MA-38379 LONDON

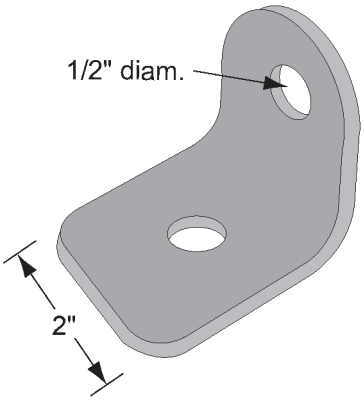

BRACKET - SWIVEL, WATER PIPE

1331671 MTM MA-38657 LONDON

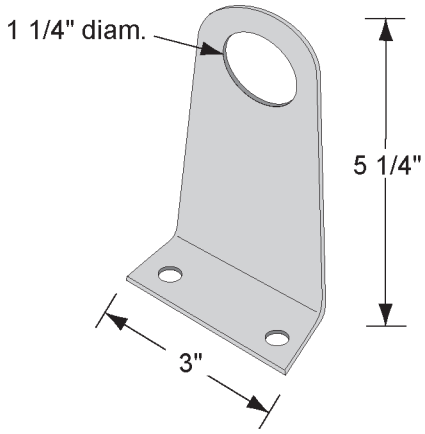

BRACKET - REGULATOR, CONTROL

1331669 MTM MB-39743 LONDON

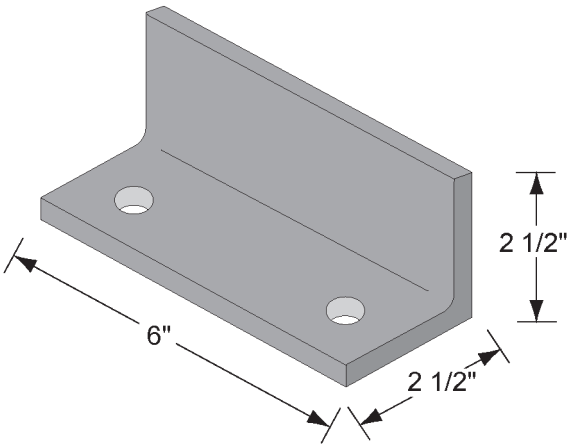

BRACE - COOLER, HYDRAULIC OIL

1331195 MTM MA-29014 LONDON

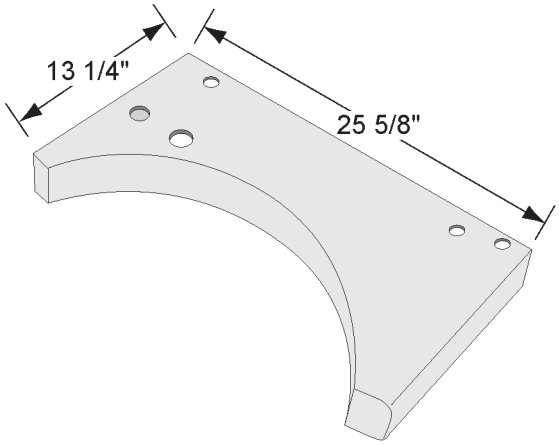

CRADLE - TANK

1255818 MTM MC-38409 LONDON

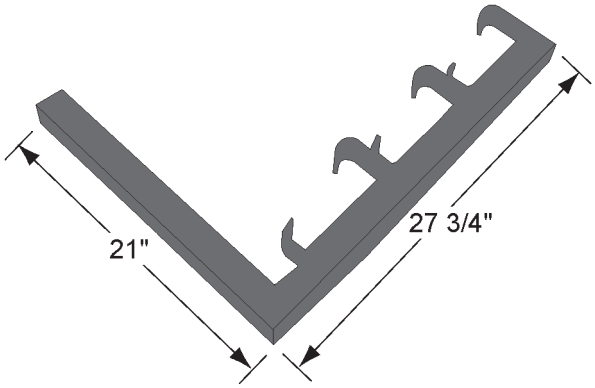

BRACKET - MOUNTING, 3 CHUTE HORIZONTAL

1256036 MTM MD-39432 LONDON

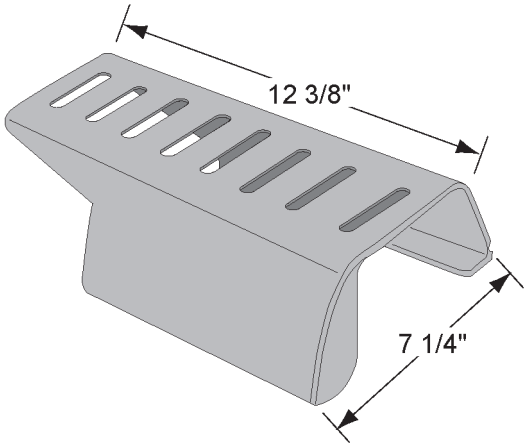

BRACE - ADAPTER, FRONT FENDER

1330308 MTM MB-38183 LONDON

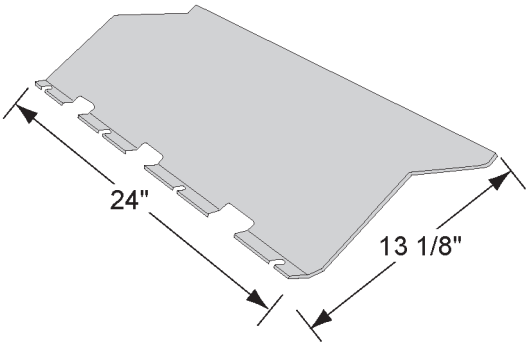

GUARD - FENDER, REAR

1255575 MTM MB-38973 LONDON

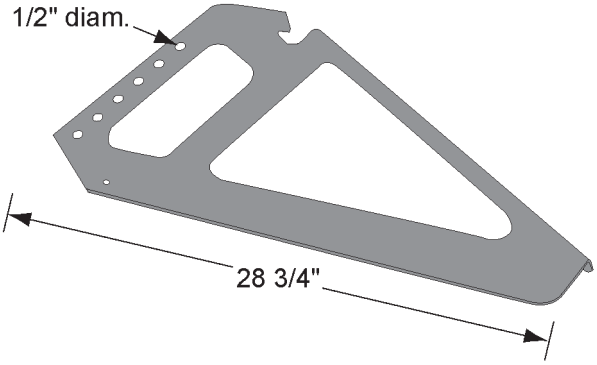

SUPPORT - FENDER, CENTER

1255609 MTM MB-38973 LONDON

No Image Available

BRACKET - FENDER, FRONT, LMI

1330308 MTM MB-38183 LONDON

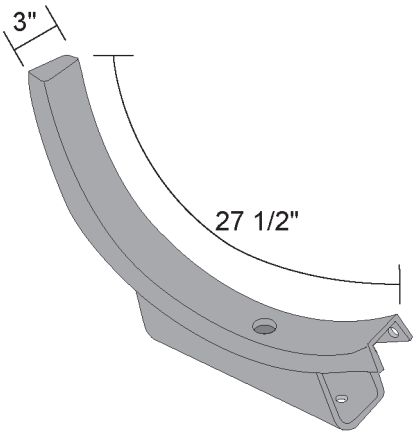

CRADLE - TANK, WATER, 24”

1256027 MTM MD-35482-01 LONDON

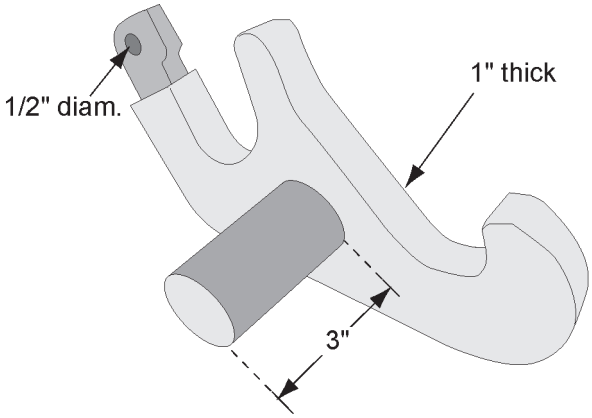

LATCH - AXLE

1331092 MTM MB-39308 LONDON

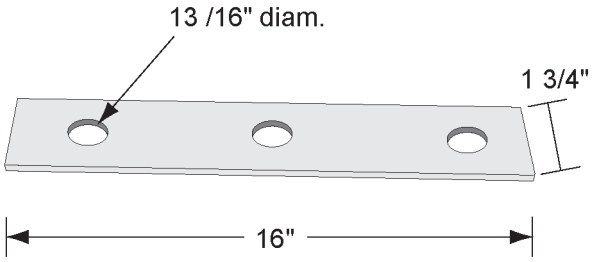

BAR - ALIGNMENT, TE DOWN BOLT

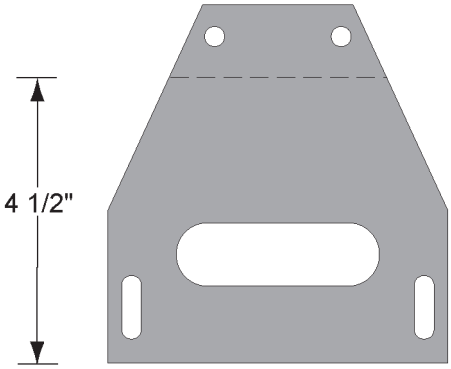

BRACKET - MOUNTING

MB-38415 LONDON

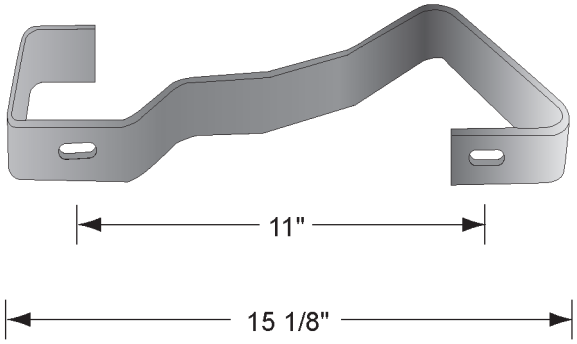

BRACKET - CHUTE, EXTENSION

1255771 MTM MC-30095 LONDON

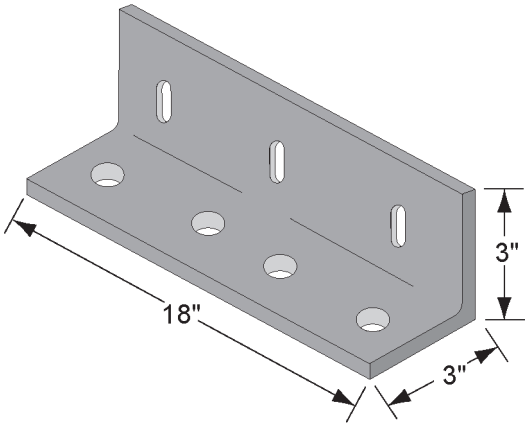

ANGLE - UPPER, FRONT/REAR

MB-36292-01 LONDON

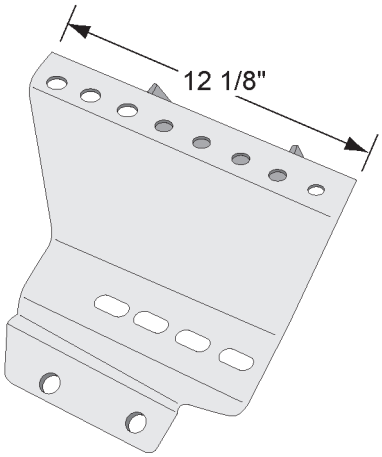

BRACKET - FENDER, REAR, RH

1113467 MTM MC-38184-01 LONDON

BRACKET - FENDER, REAR, LH

1330309 MTM MC-38184-02 LONDON

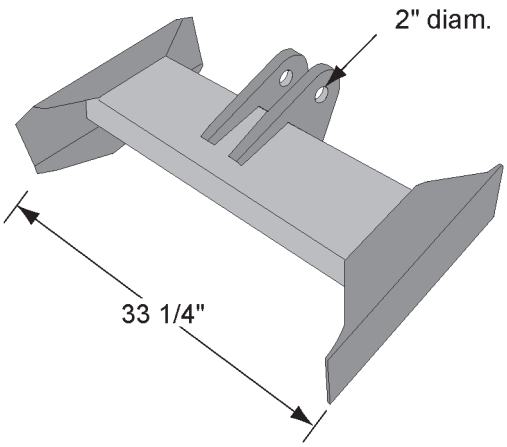

MOUNT - CYLINDER, 2" PIN

0183800 MTM

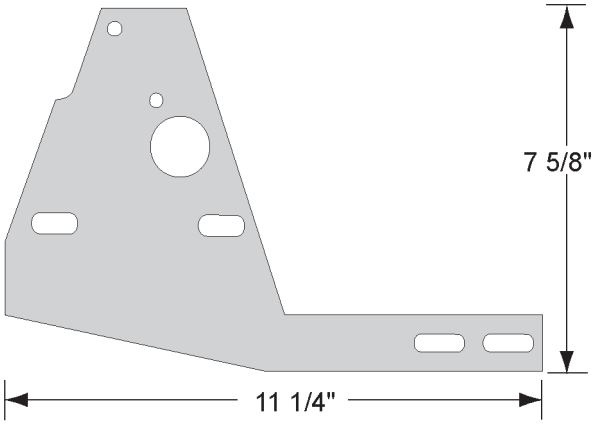

BRACKET - PUMP, CONTROL

MC-31697 LONDON

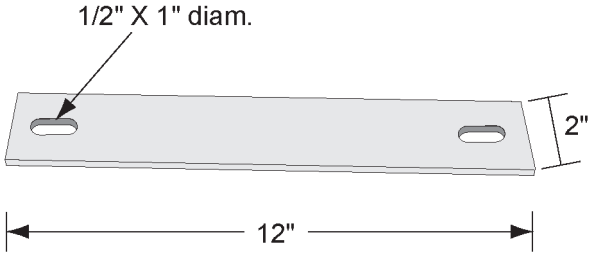

BRACKET - CHUTE, BACKUP STRAP

0082369 MTM

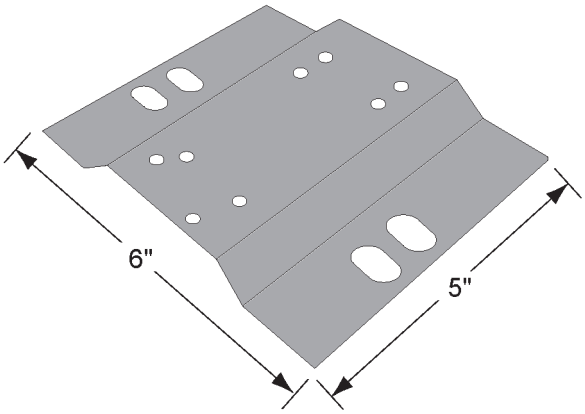

BRACKET - MOUNT, MAC DOUBLE VALVE

0084817 MTM

MTM

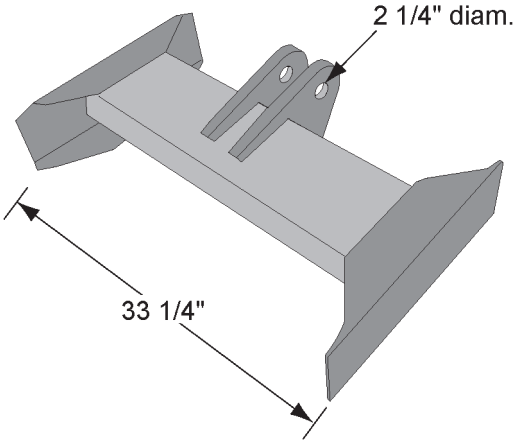

MOUNT - CYLINDER, 2.25" PIN

0183845 MTM

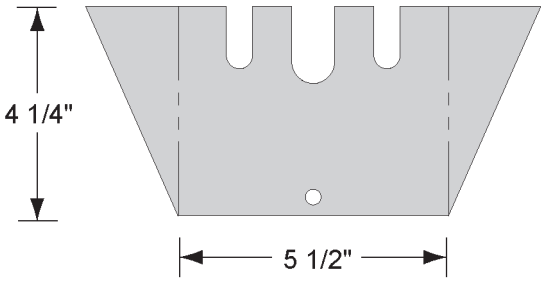

BRACKET - MOUNTING, AIR CANISTER

0151236 MTM

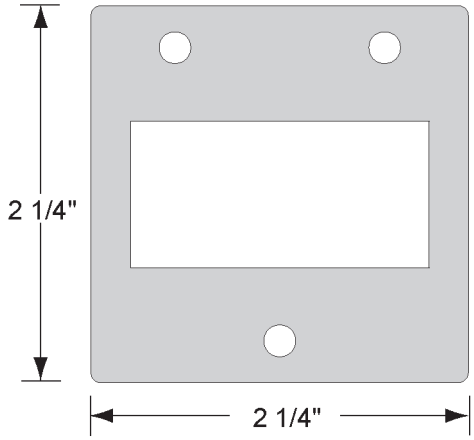

PLATE - MOUNTING, DIGITAL CONTROL ADAPTER

0110261 MTM

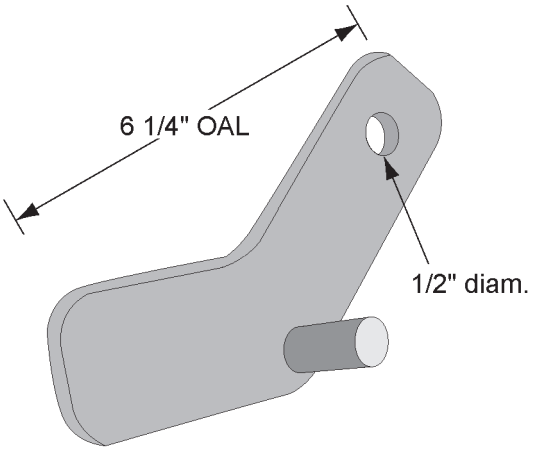

BRACKET - LATCH CHUTE, LH

0084965 MTM

BRACKET - LATCH CHUTE, RH

0084960 MTM

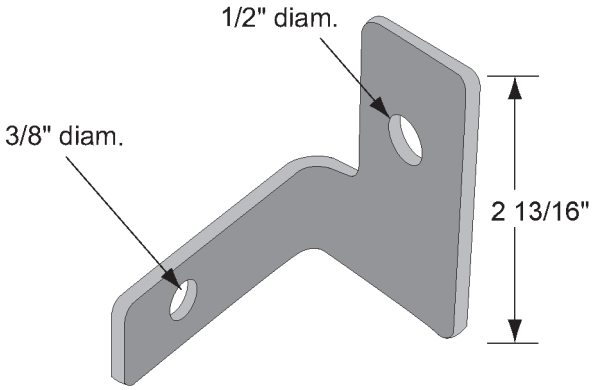

BRACKET - SENSOR, MAGNETIC

0500421 MTM

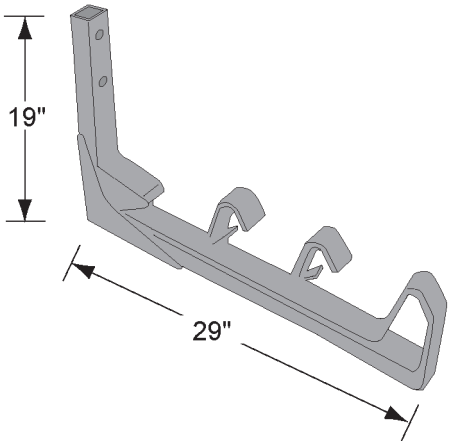

BRACKET - 3CHUTE, L TYPE

0152930 MTM

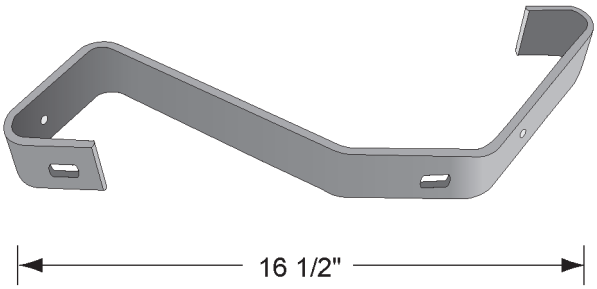

BRACKET - EXTENSION, CHUTE

0082368 MTM

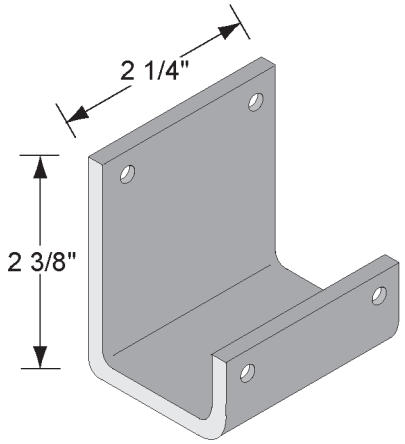

BRACKET - PENDANT HOLDER

0500423 MTM

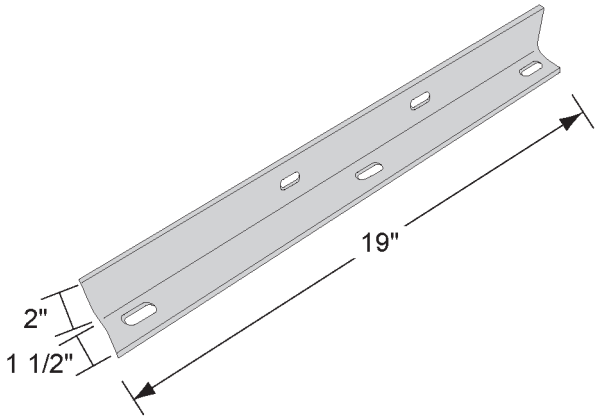

BRACE - FENDER, CENTER

0152717 MTM

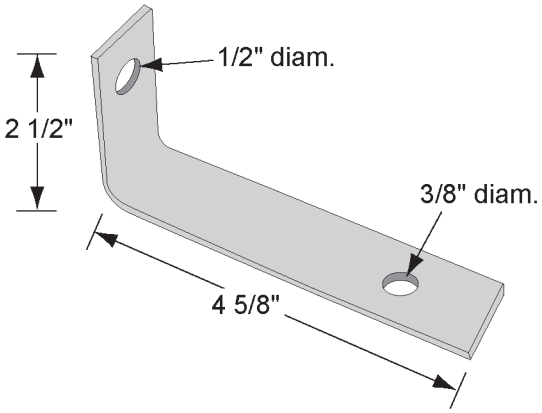

BRACKET - SENSOR, PROXIMITY

0084468 MTM

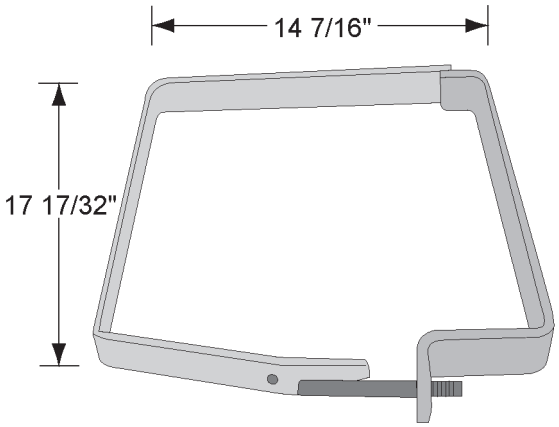

BRACKET - MOUNTING, OIL RESERVOIR

0150065 MTM

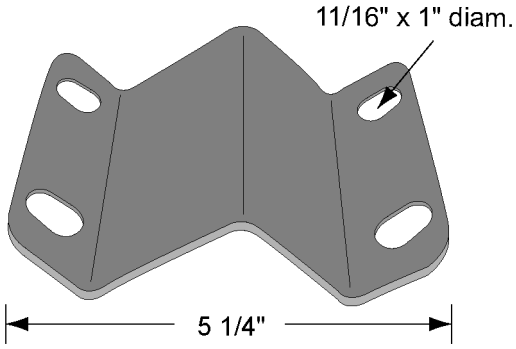

BRACKET - RETAINER, FENDER, PLASTIC

0183740 MTM

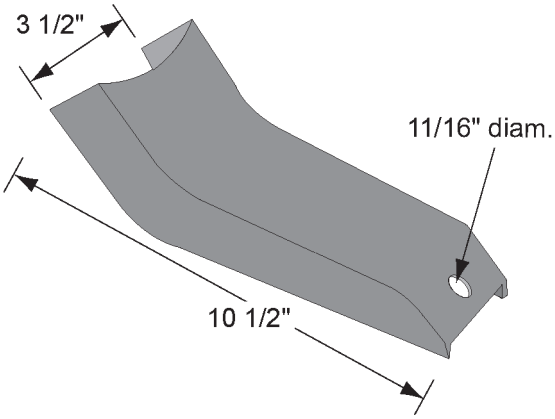

MOUNT - FENDER, ROTATION BAR

0184770 MTM

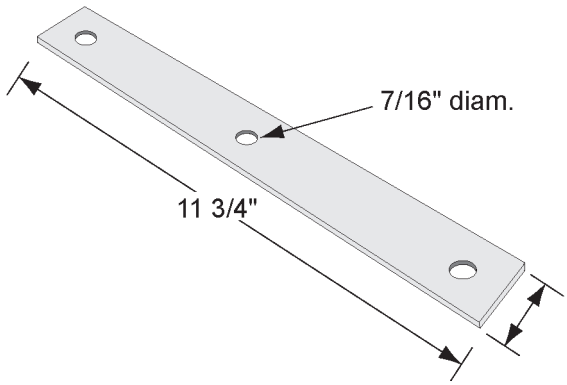

STRAP - MUDFLAP, BM/TAW

0085479 MTM

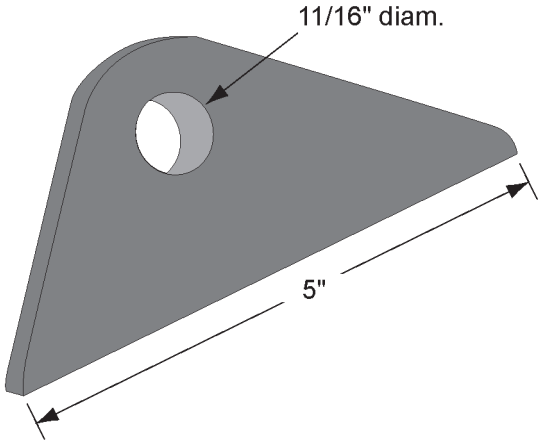

MOUNT - LUG

0182239 MTM

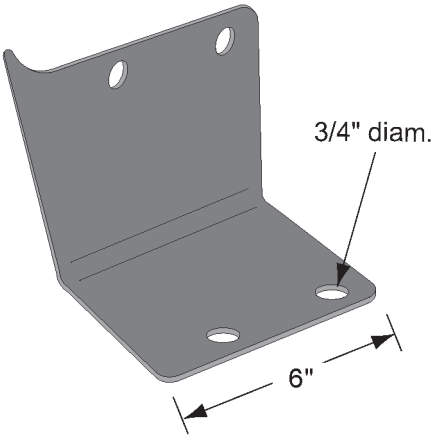

BRACKET - FENDER, ADD ON, PLASTIC, LH

0183739 MTM

BRACKET - FENDER, ADD ON, PLASTIC, RH

0183738 MTM

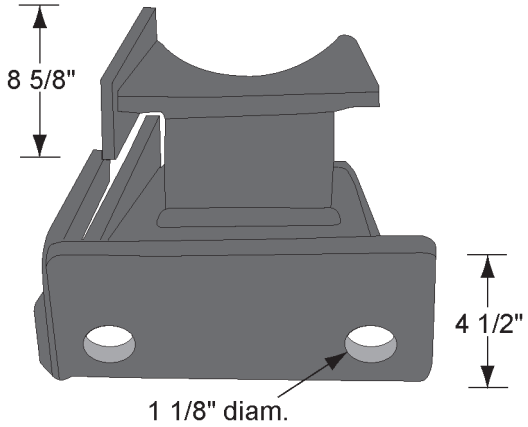

SADDLE - AXLE, BM III, LH

0086445 MTM

SADDLE - AXLE, BMIII, RH

0086440 MTM

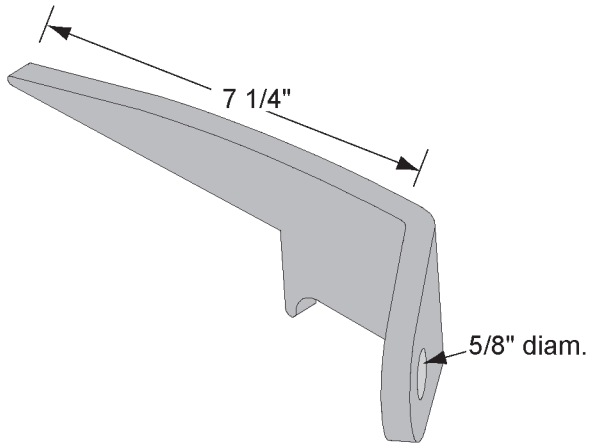

MOUNT - BASE, HOPPER CYLINDER

0153306 MTM

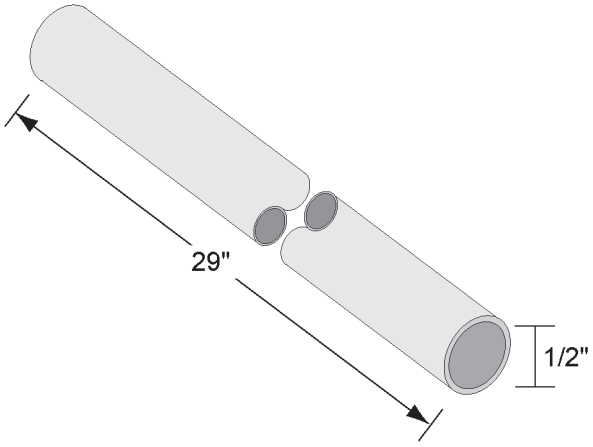

TUBE - WIRING

0130256 MTM

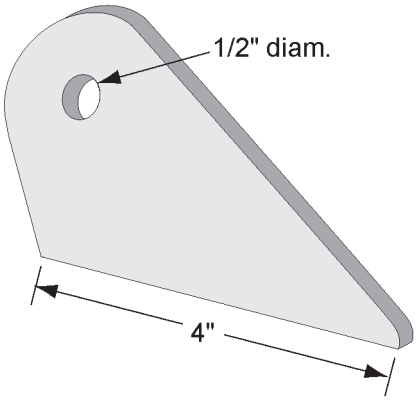

EYE - FLIP UP, HOPPER CYLINDER

0151259 MTM

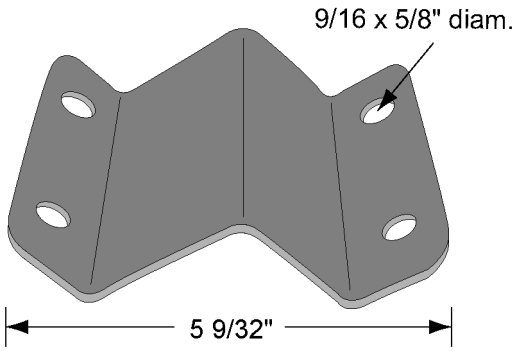

CLIP - RETAINER, PLASTIC, FENDER

0183484 MTM

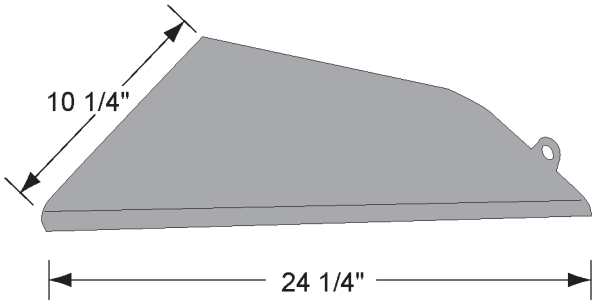

WING - SIDE, HOPPER, LH

0151257 MTM

WING - SIDE, HOPPER, RH

0151256 MTM

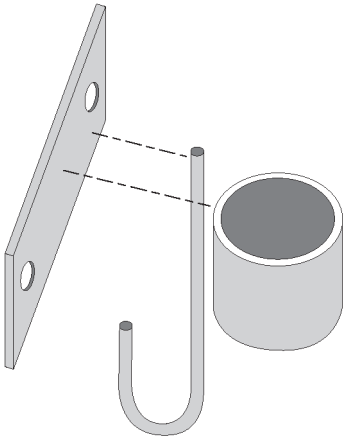

SCRAPER - CHUTE, HDR

1238300 MTM

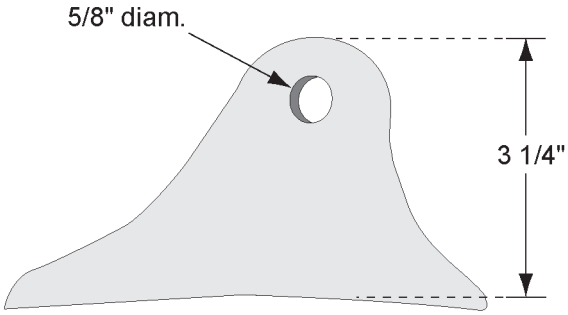

EYE - MOUNT, HOPPER CYLINDER

0153373 MTM

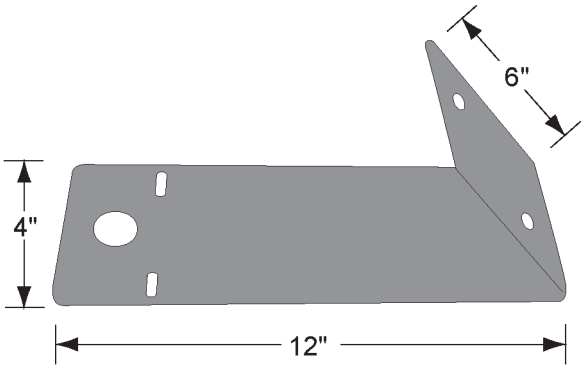

MOUNT - FLOOR, SLUMP METER

0084026 MTM

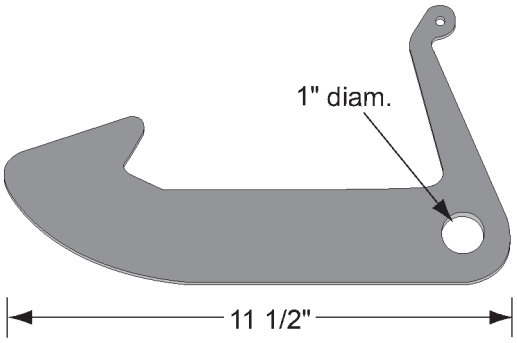

HOOK - LATCH, TAW, LH

0184933 MTM

HOOK - LATCH, TAW, RH

0184932 MTM

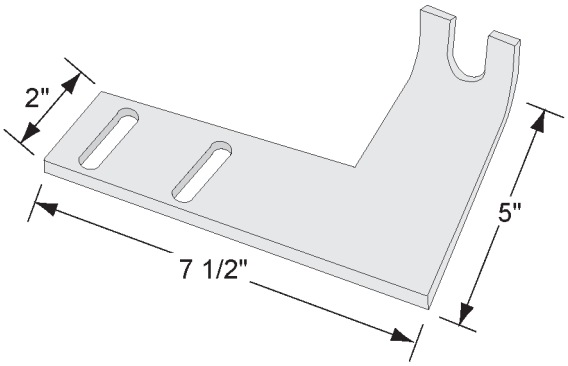

MOUNT - PUMP, REVERSE CABLE

0150925 MTM

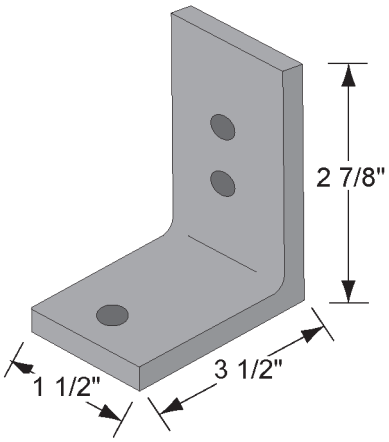

BRACKET - SIGHT GAUGE, WATER TANK

0150766 MTM

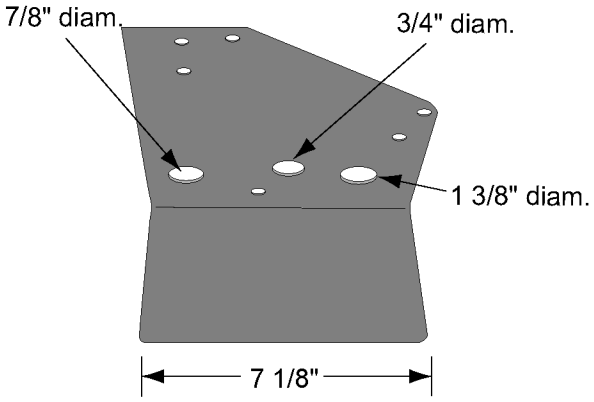

BRACKET - SIGHT GAUGE, WATER TANK

0500420 MTM

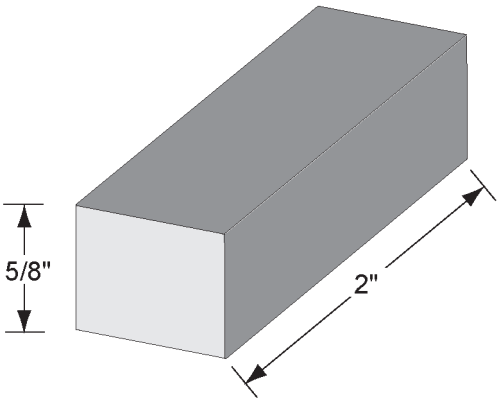

BRACKET - STOP, LATCH HOOK

0184935 MTM

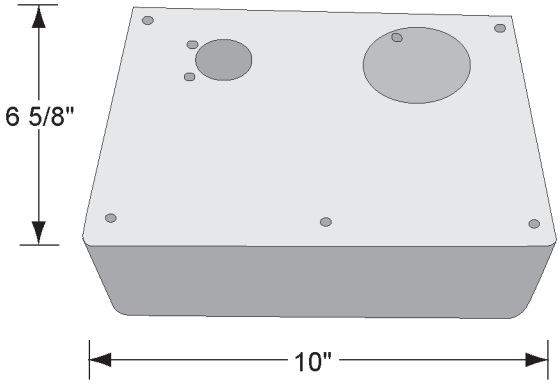

BOX - VALVE, 3 WAY, WATER TANK

0082401 MTM

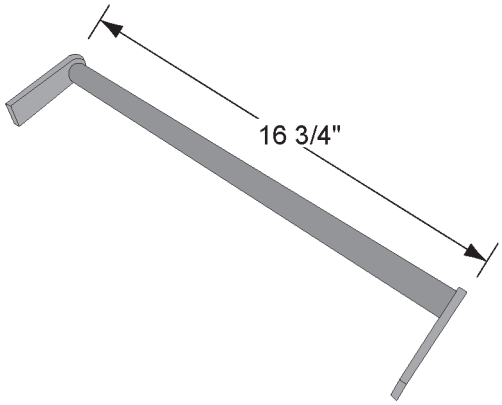

HANDLE - TANK, WATER

0182840 MTM

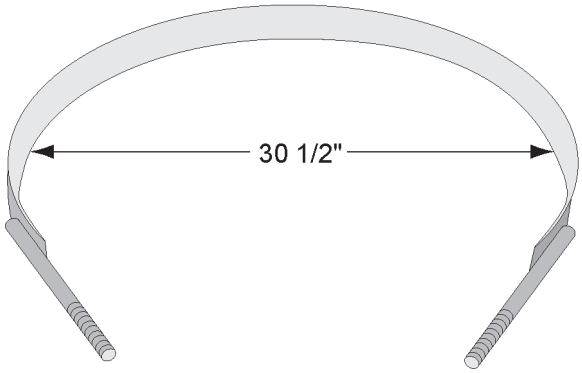

STRAP - TOP, TANK SADDLE

1146567 MTM

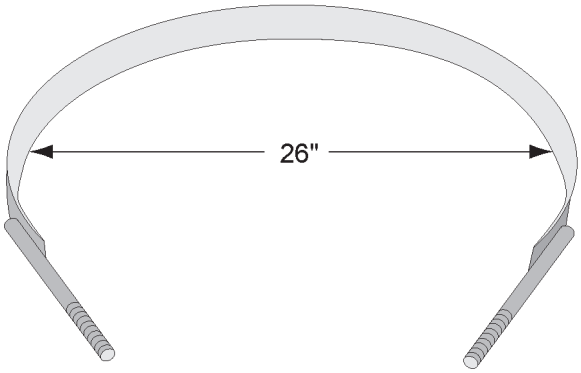

STRAP - TOP, TANK SADDLE

0182874 MTM

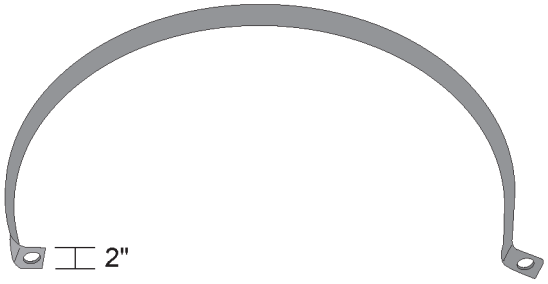

STRAP - TANK, SIDE MOUNT

0082379 MTM

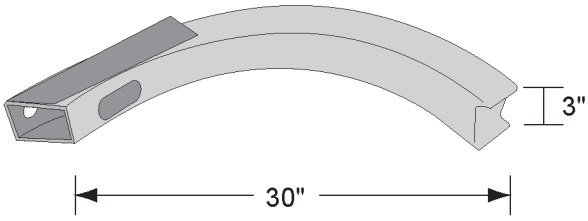

BRACKET - MOUNTING, LOWER WATER TANK

0082378 MTM

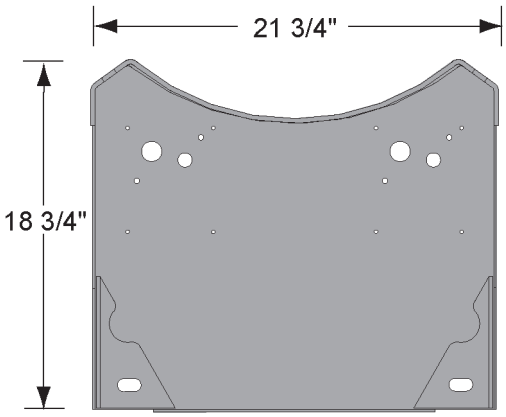

SADDLE - CROSSMOUNT, UNIVERSAL

1531582 MTM

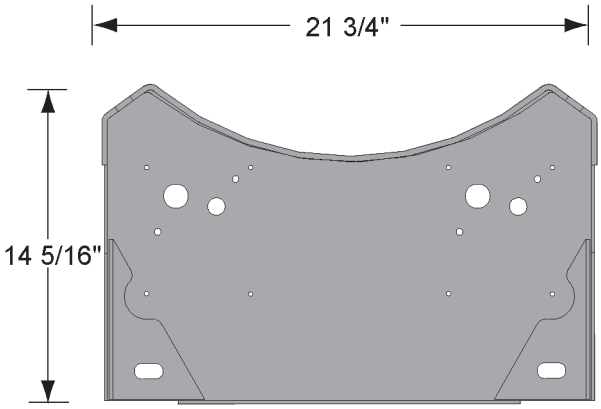

SADDLE - CROSSMOUNT, UNIVERSAL

1531581 MTM

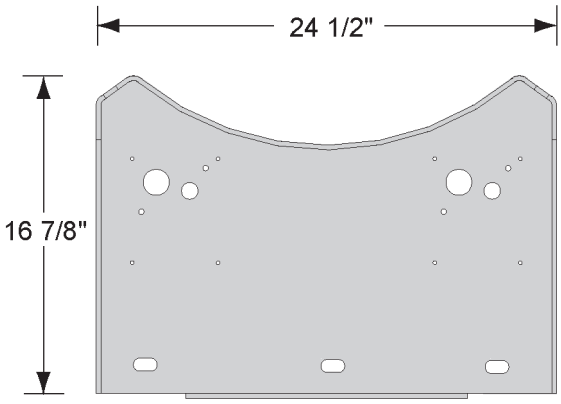

SADDLE - CROSSMOUNT, 200 GAL

1225135 MTM

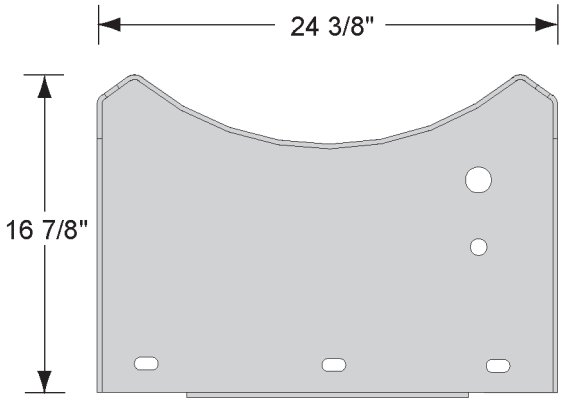

SADDLE - CROSSMOUNT, UNIVERSAL, 200 GAL

1221567 MTM

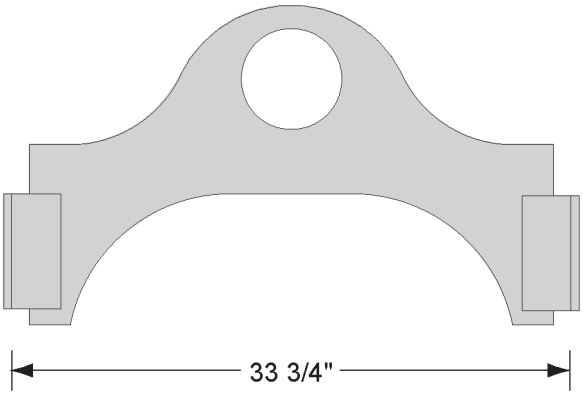

HOOK - TOW, HEAVY DUTY

0500665 MTM

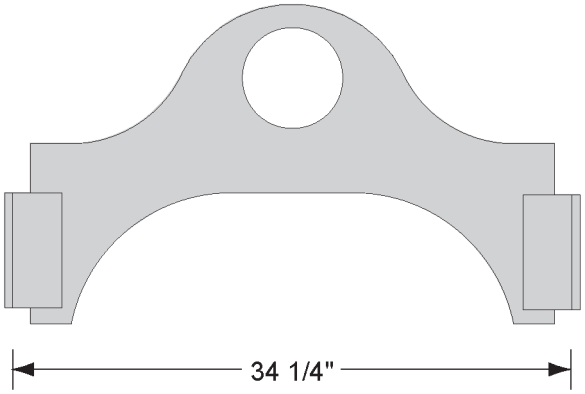

HOOK - TOW, HEAVY DUTY

0500670 MTM

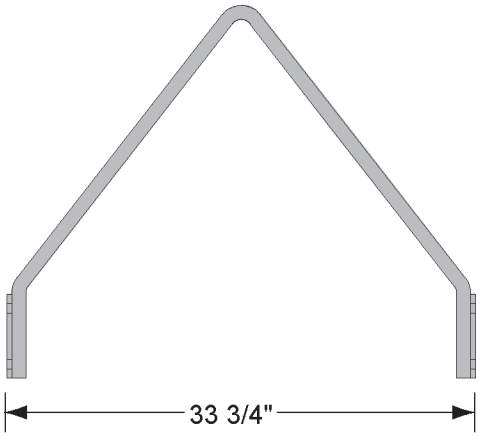

LOOP - TOW, REAR, '95

0150368 MTM

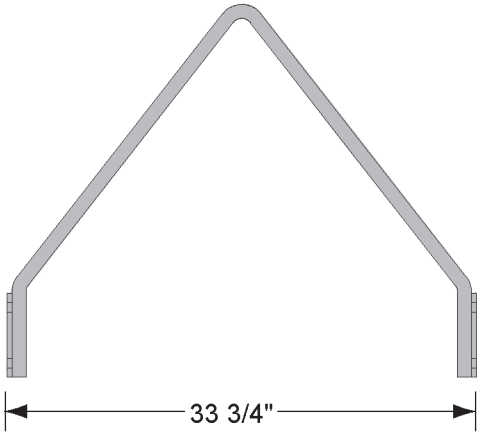

LOOP - TOW, DROP

0155033 MTM

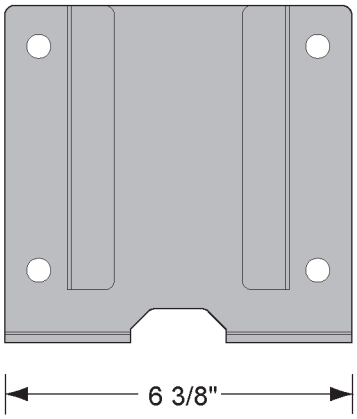

HOLDER - PENDANT, REAR

1321899 MTM

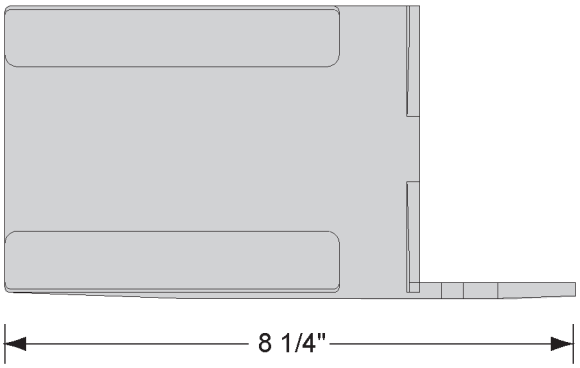

HOLDER - PENDANT, REAR, '98

0500440 MTM

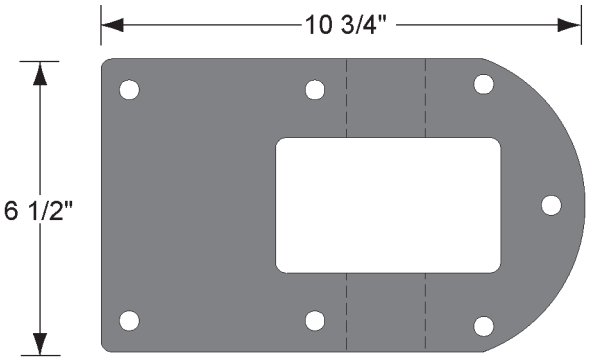

MOUNT - FENDER, CONTROL BOX

0500442 MTM

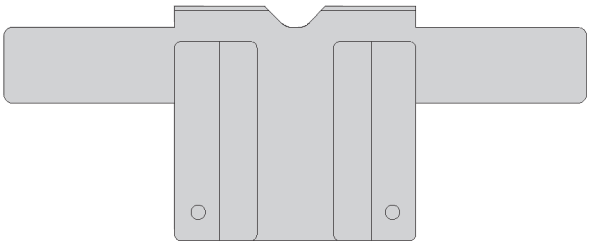

HOLDER - PENDANT, REAR, '95

0500435 MTM

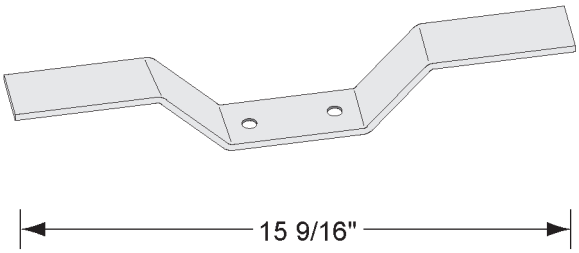

BRACKET - HOLDER, WIRE, BOLT ON

0084799 MTM

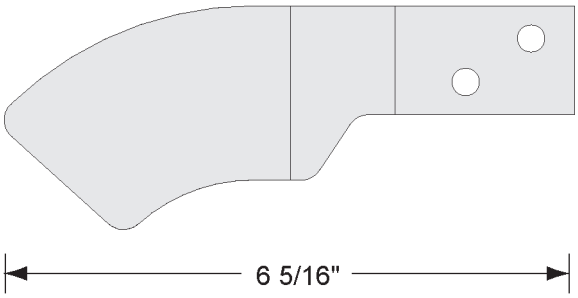

PLATE - SENSOR TARGET

0189054 MTM

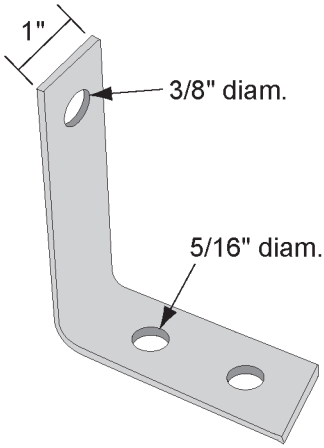

BRACKET - HINGE, WATER GAUGE

0152762 MTM

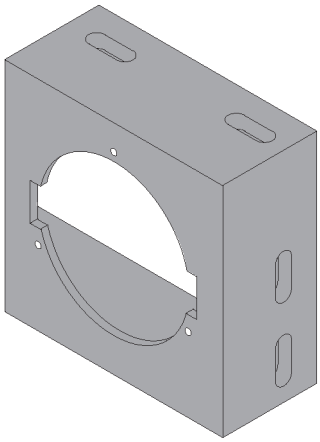

BOX - MOUNT, GAUGE, BM

0085089 MTM

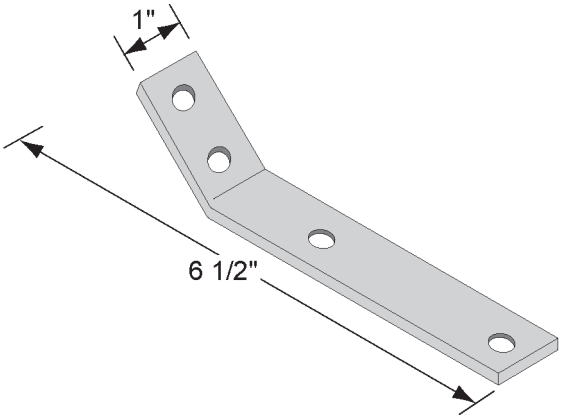

BRACKET - SLUMP METER, ZF FAN COOLER

0084325 MTM

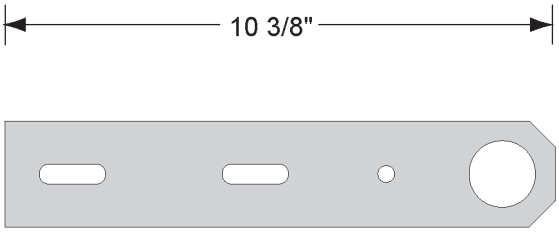

BRACKET - MOUNTING, PROXIMITY SENSOR

0189053 MTM

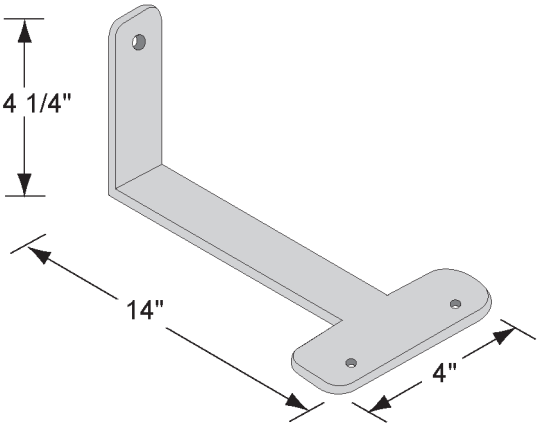

BRACKET - T-BAR, SLUMP METER

0500407 MTM

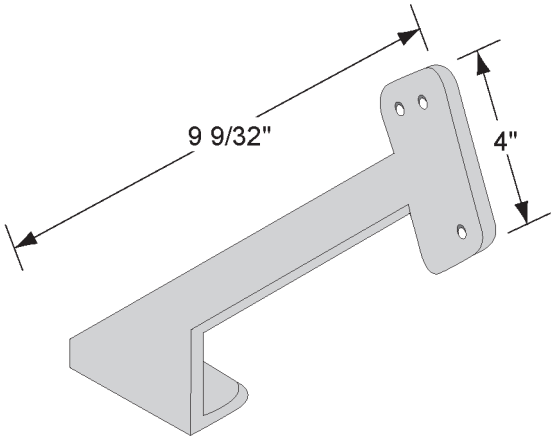

BRACKET - SLUMP METER, REAR PED

0084296 MTM

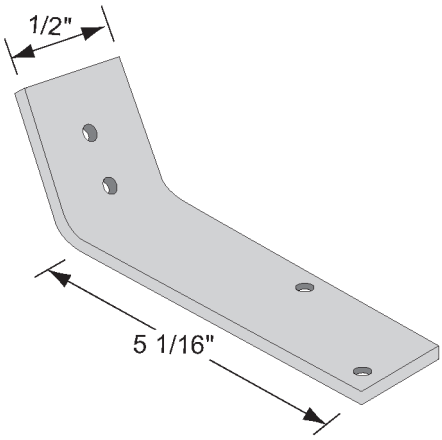

BRACKET - SLUMP METER, FRONT PEDESTAL

0500403 MTM

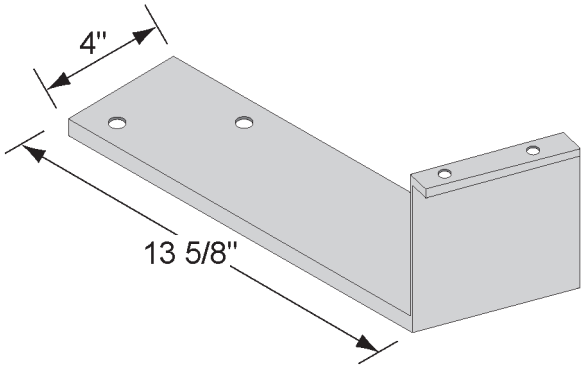

BRACKET - SLUMP METER

0084029 MTM

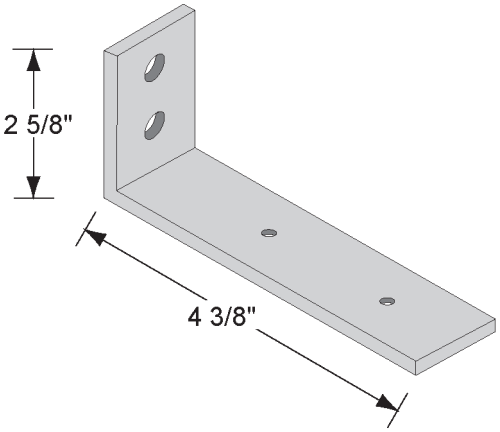

BRACKET - SLUMP METER (CAB BOX)

0500448 MTM

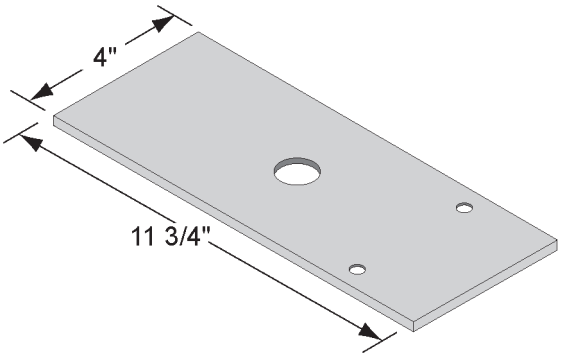

BRACKET - SLUMP METER

0084030 MTM

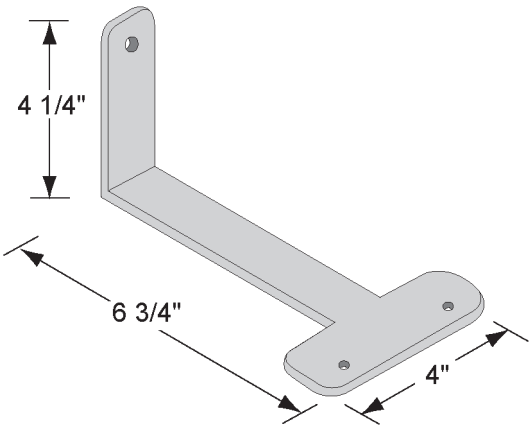

BRACKET - SLUMP METER, CROSSMEMBER

1263841 MTM

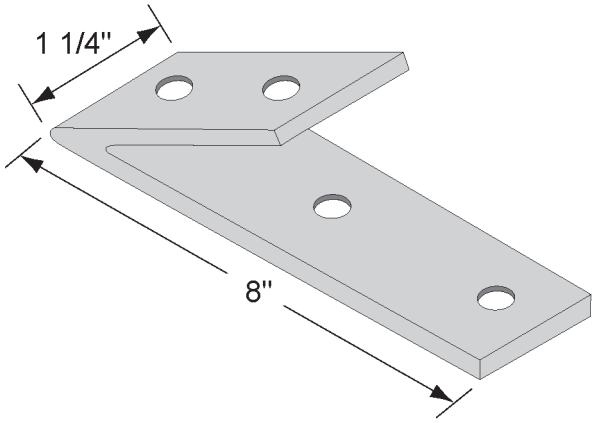

BRACKET - SLUMP METER, LO ANGLE, REAR PED

0151109 MTM

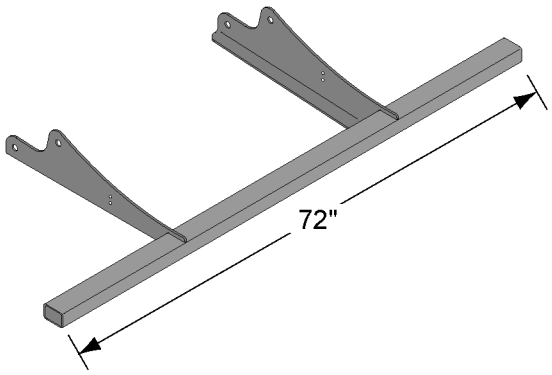

BUMPER - WELDMENT, 33 1/2”

1148250 MTM

BUMPER - WELDMENT, 34 1/4”

1148251 MTM

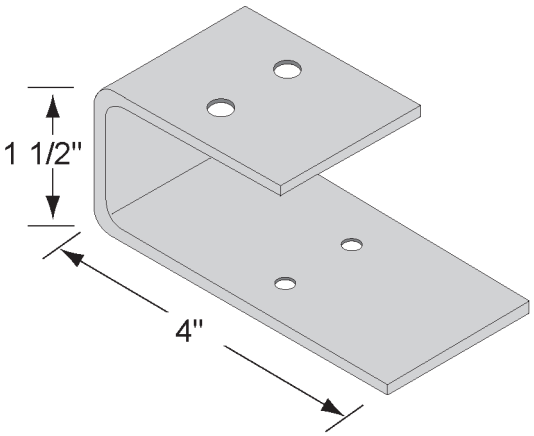

BRACKET - SLUMP METER, CAB

1107192 MTM

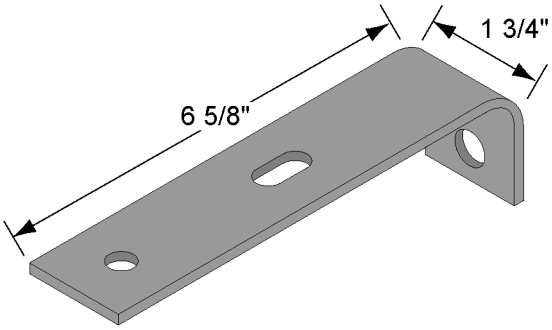

BRACKET - MAIN RAIL, HYD LINE

0084277 MTM

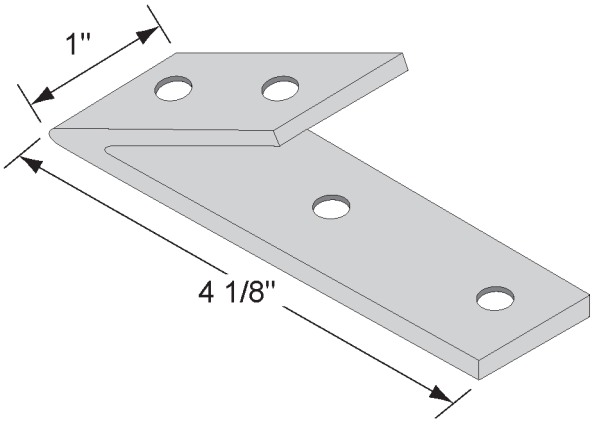

BRACKET - SLUMP METER, ZF

0084292 MTM

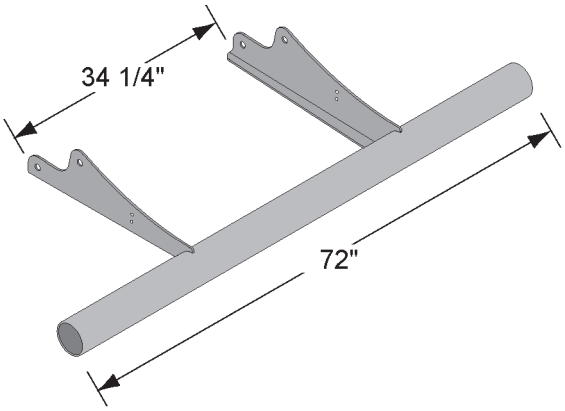

BUMPER - ROUND, 34 1/4”

1269278 MTM

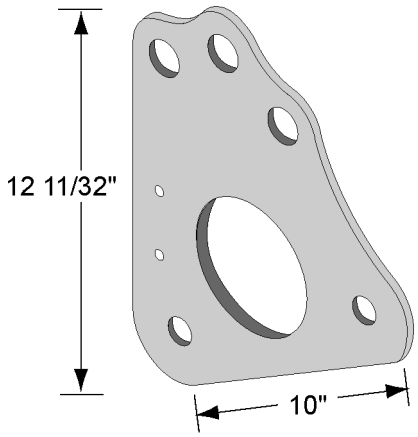

BRACKET - BUMPER, BOLT ON

0189001 MTM

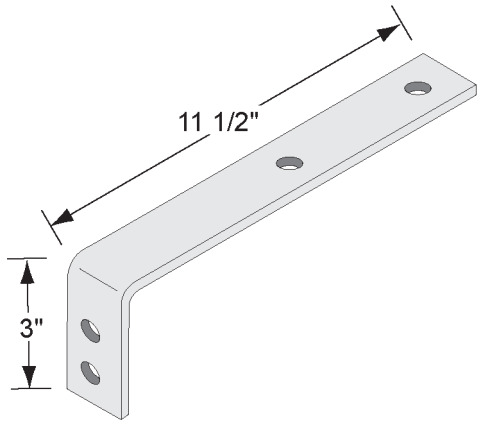

BRACKET - TAILLIGHT

1100346 MTM

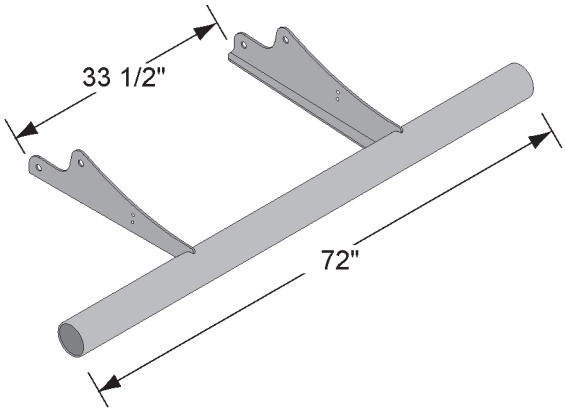

BUMPER - ROUND, 33 1/2”

1269277 MTM

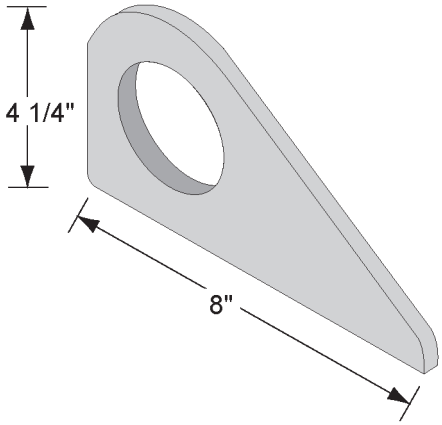

EYES - TOW, STAIBLIZER PAD

0151866 MTM

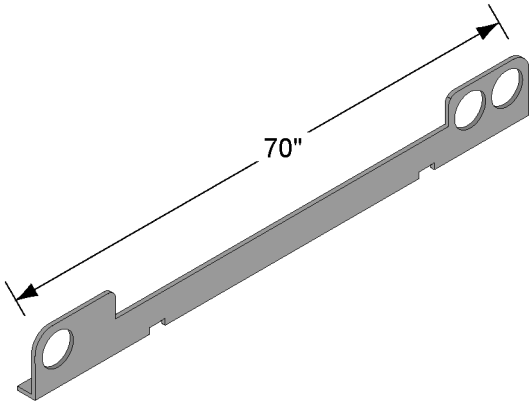

BUMPER - CHASSIS

1319670 MTM

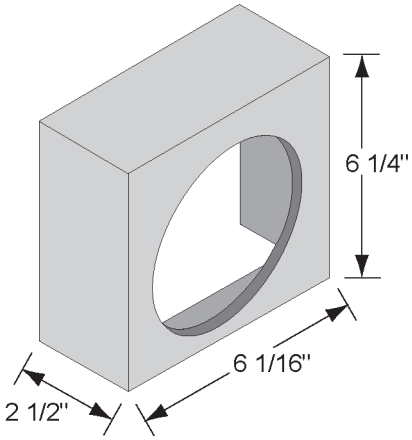

BRACKET - LIGHT, SINGLE, OPEN BACK

1144728 MTM

BRACKET - LIGHT, SINGLE, CLOSED BACK

1182192 MTM

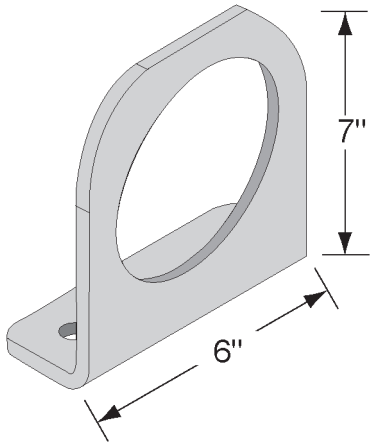

BRACKET - SIGNAL, STOP/TURN

0605602 MTM

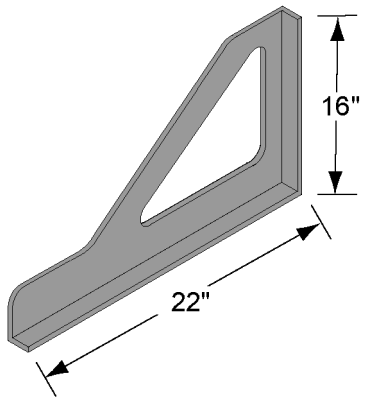

TOOL BOX SIDE BRACKET, LH

0240627 MTM

TOOL BOX SIDE BRACKET, RH

0240626 MTM

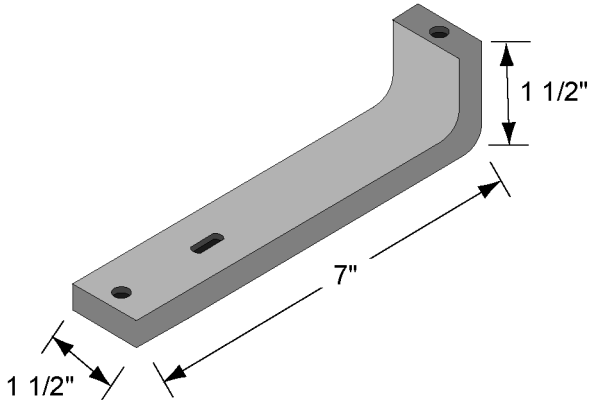

HANGER - HOSE, SHORT

0084574 MTM

REX

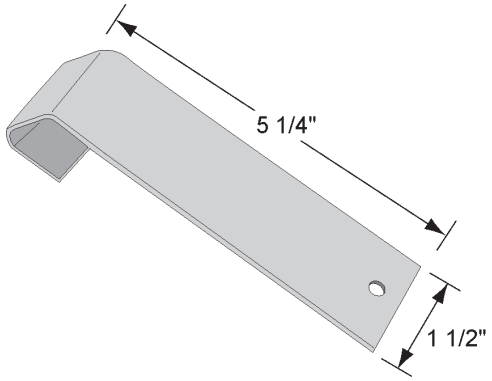

HOOK - CHUTE CARRIER

1113255 MTM 502-08484-80 REX

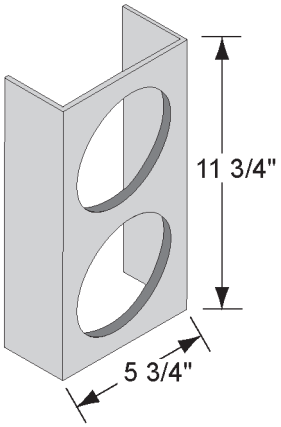

BRACKET - LIGHT, DUAL, OPEN BACK

0153218 MTM

BRACKET - LIGHT, DUAL, CLOSED BACK

0153220 MTM

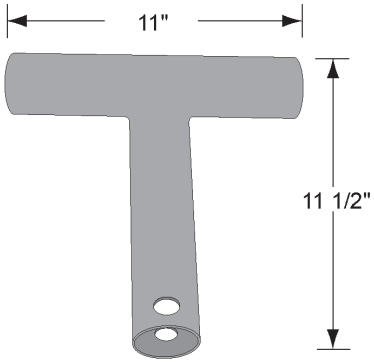

TEE - MOUNT, CYLINDER

1226344 MTM 102-09003-01 REX

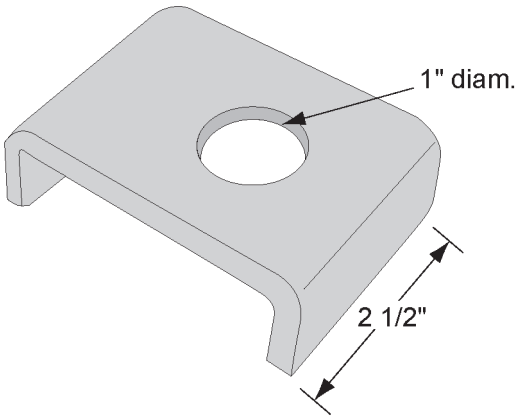

CLIP - EXTENSION, SPOUT

1112912 MTM 502-20046-02 REX

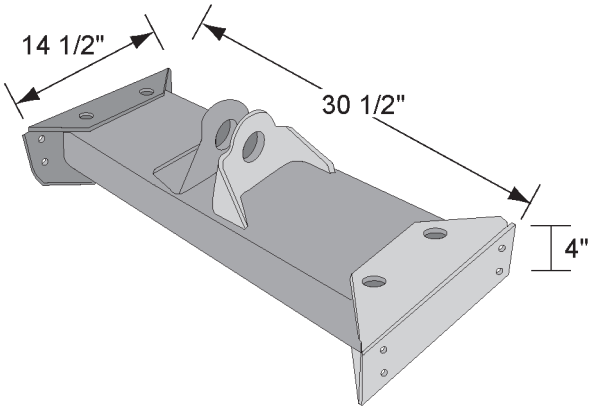

CROSSMEMBER - BOOSTER CYLINDER MOUNT

1113288 MTM 502-20821-80 REX

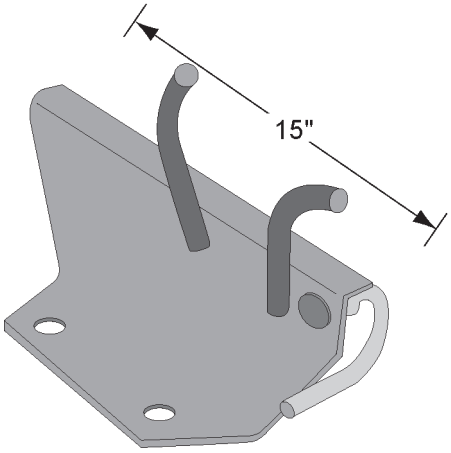

BRACKET - CHUTE HANGER, 2 HOOK

1112718 MTM 502-20242-81 REX

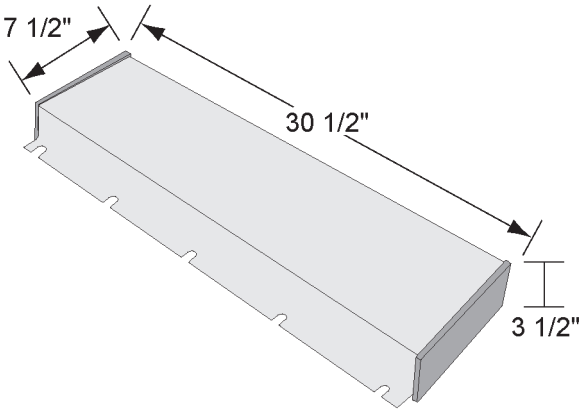

BRACKET - REAR, FENDER

1112731 MTM 502-20972-80 REX

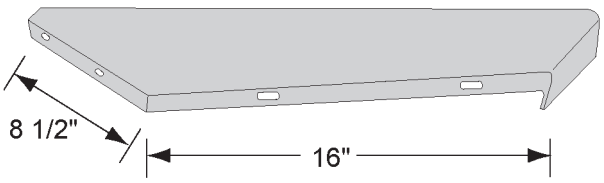

BRACE - FENDER, LH

1113162 MTM 502-00341-81 REX

BRACE - FENDER - RH

1113161 MTM 502-00341-80 REX

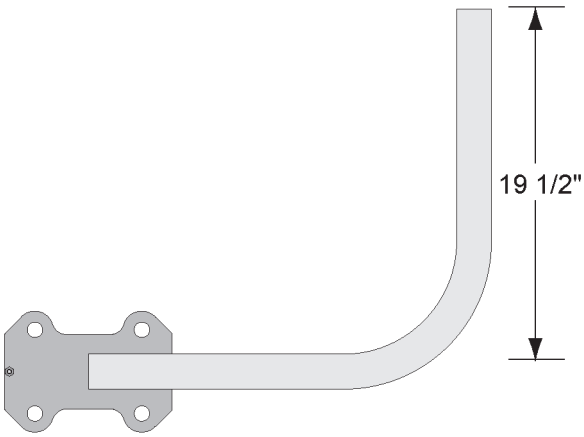

BRACKET - FENDER, BOOSTER, LH

1140415 MTM 502-30175-80 REX

BRACKET - FENDER, BOOSTER, RH

1140416 MTM 502-30175-81 REX

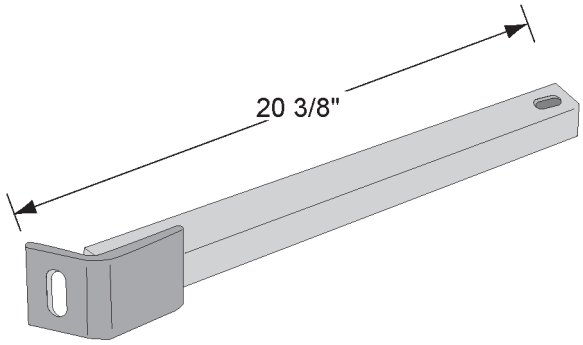

BRACKET - FENDER, CENTER

1113038 MTM 502-30323-80 REX

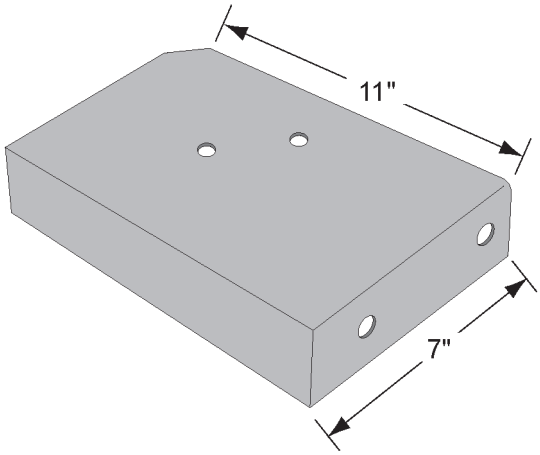

COVER - LIFT VALVE, HYDRAULIC LIFT

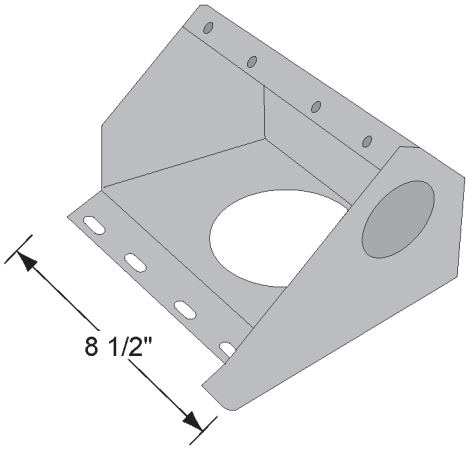

HOUSING - LIGHT, TAIL, BOOSTER, LH

1112925 MTM 502-20667-80 REX

HOUSING - LIGHT, TAIL, BOOSTER, RH

1113674 MTM 502-20667-81 REX

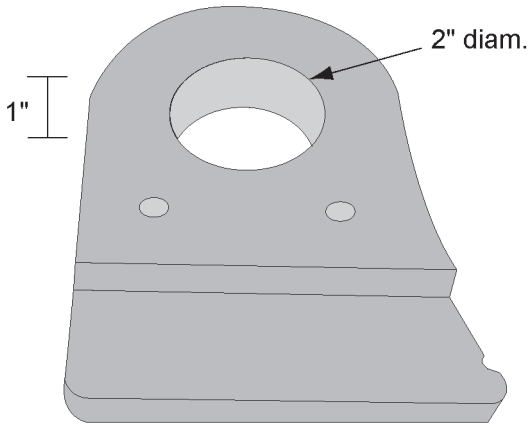

MOUNT - PIVOT, TRAILOR, LH

1114516 MTM 102-31466-02 REX

MOUNT - PIVOT, TRIALOR, RH

1113071 MTM 102-31466-01 REX

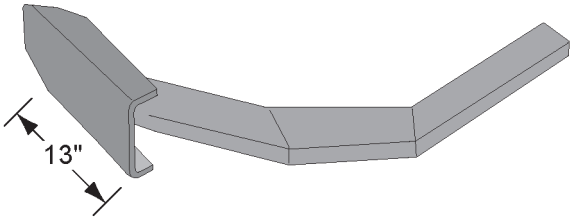

BRACKET - MOUNTING, FENDER

1112651 MTM 502-20259-80 REX

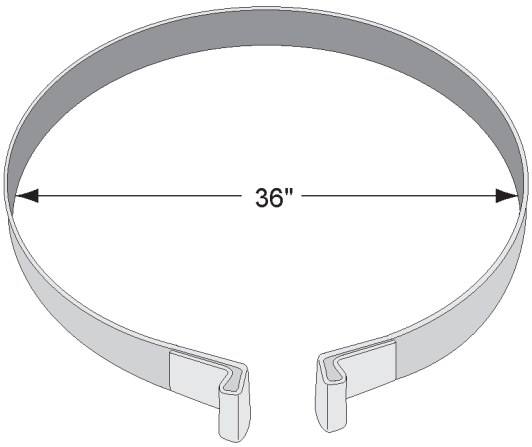

STRAP - TANK, WATER, 36”

1113814 MTM 502-06371-80 REX

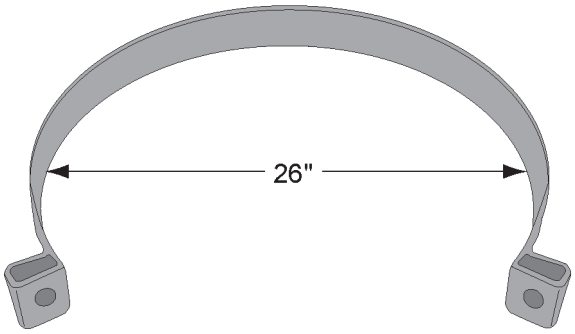

STRAP - TANK, WATER, 26”

1112882 MTM 502-20002-80 REX

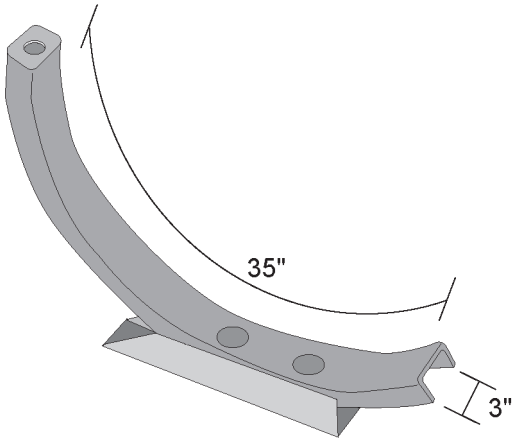

SUPPORT - TANK, WATER, 26”

1112779 MTM 502-08616-80 REX

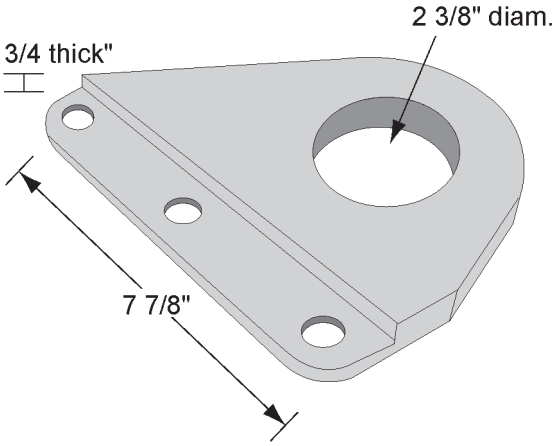

BRACKET - ROLLER, LH

1137461 MTM 102-31157-02 REX

BRACKET - ROLLER, RH

1113036 MTM 102-31157-02 REX

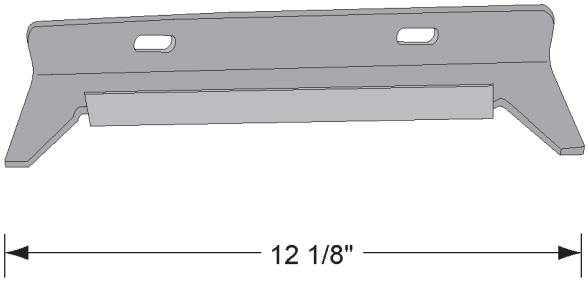

BRACKET - SUPPORT, HOPPER

1143445 MTM 502-30210-80 REX

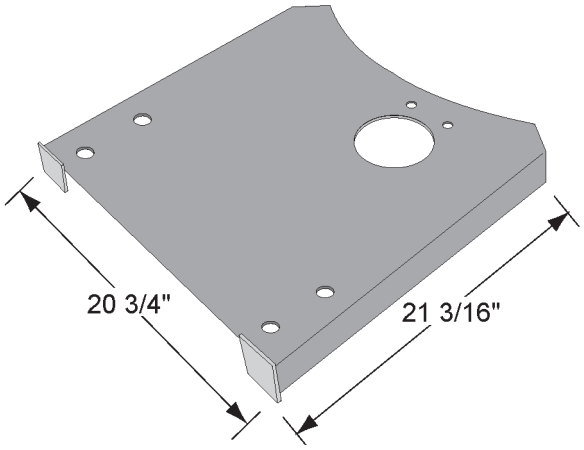

SUPPORT - TANK, WATER, TALL

1114469 MTM 502-20730-81 REX

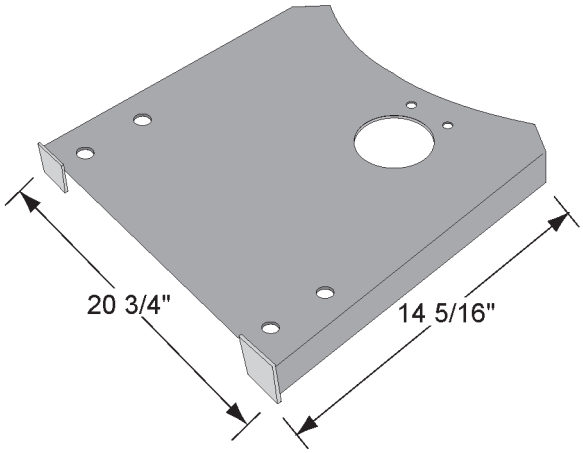

SUPPORT - TANK, WATER, SHORT

1114465 MTM 502-20730-80 REX

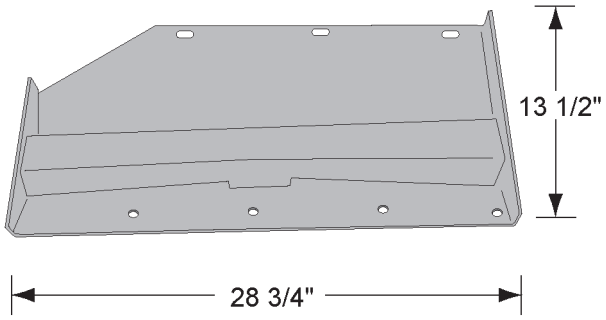

BRACKET - FENDER, FRONT, RH

1113047 MTM 502-20980-80 REX

BRACKET - FENDER, FRONT, LH

1113008 MTM 502-20980-81 REX

SMITH

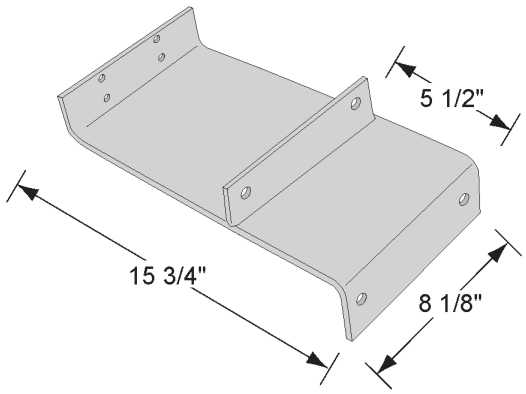

BRACKET - CONTROL, QUADCO CAB

1110159 MTM 3590001 SMITH

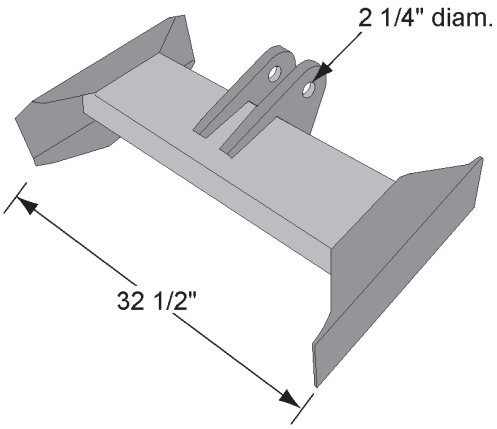

CROSSMEMBER - BM CYLINDER MOUNT

1110282 MTM 55000010 SMITH

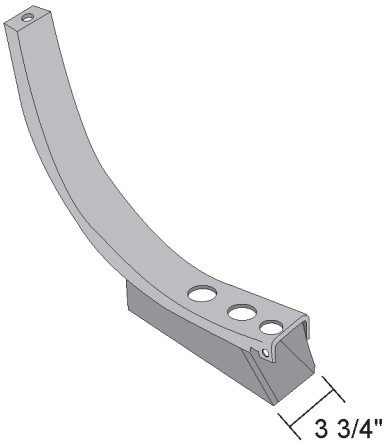

BRACKET - SADDLE, WATER TANK, 26”

1110175 MTM 33592 SMITH

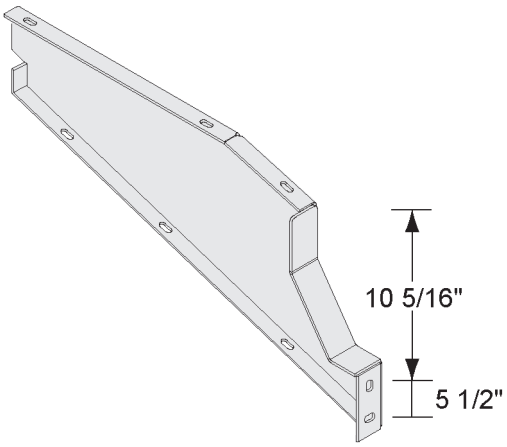

BRACKET - FENDER

1110168 MTM 43766009 SMITH

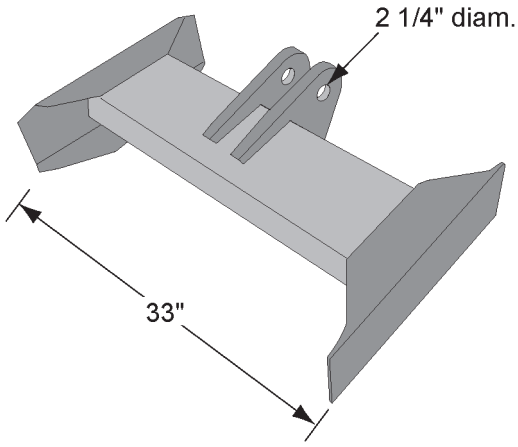

CROSSMEMBER - BOOSTER CYLINDER MOUNT

1114229 MTM 55000558 SMITH

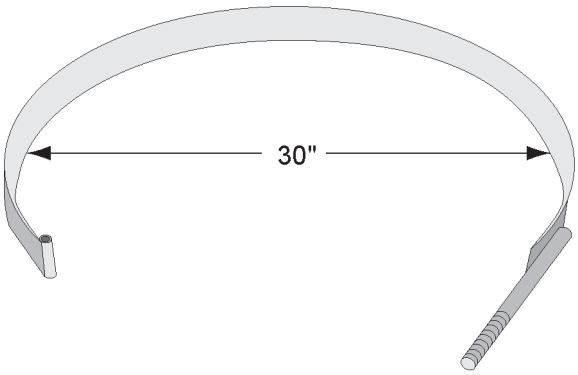

STRAP - TANK, 30”

1110134 MTM 28525 SMITH

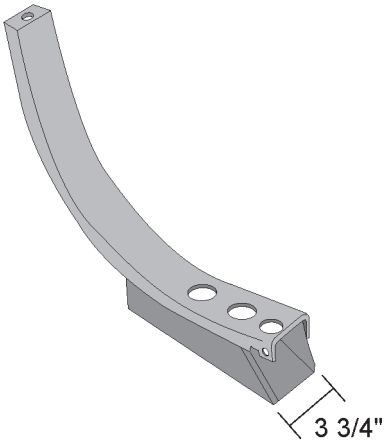

BRACKET - SADDLE, SIDE MOUNT, 30”

1110236 MTM 28522 SMITH

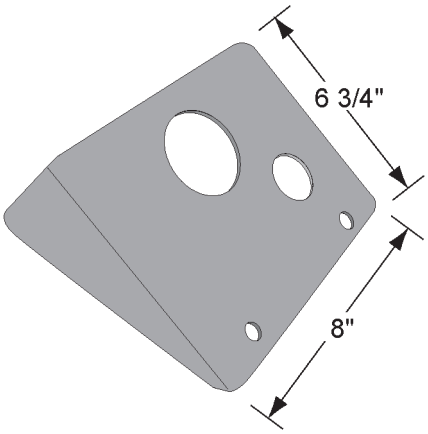

BOX - VALVE, 3 WAY, WATER TANK

1111629 MTM 437877001 SMITH

PUMP MOUNTS & PTO COVERS

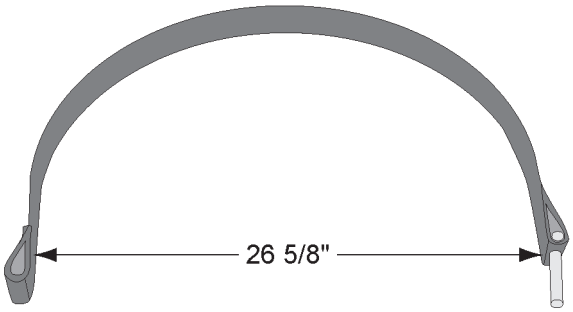

STRAP - TANK, 26”, STEEL

1111247 MTM 33593 SMITH

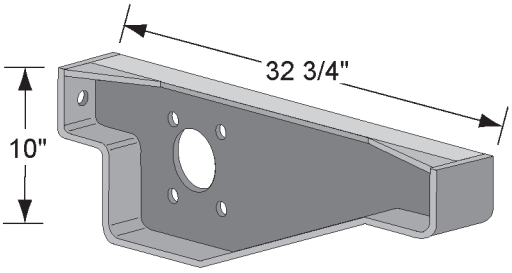

MOUNT - PUMP, MACK

0084040 MTM

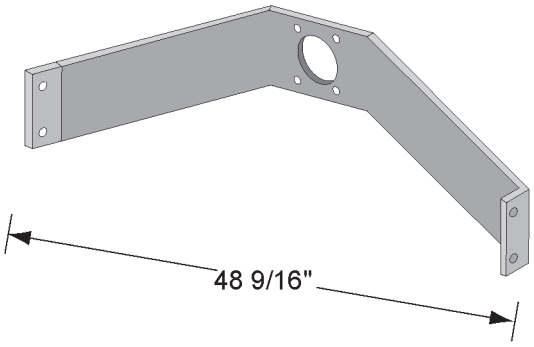

MOUNT - PUMP, MACK

0084149 MTM

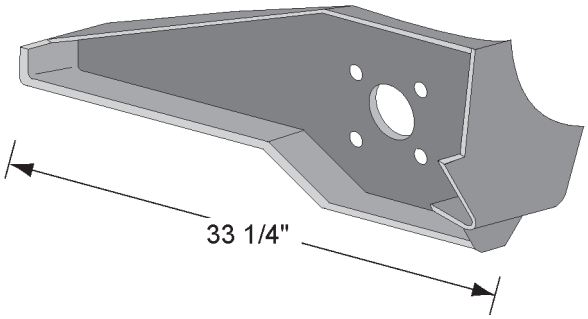

MOUNT - PUMP, IHC & KW

0084125 MTM

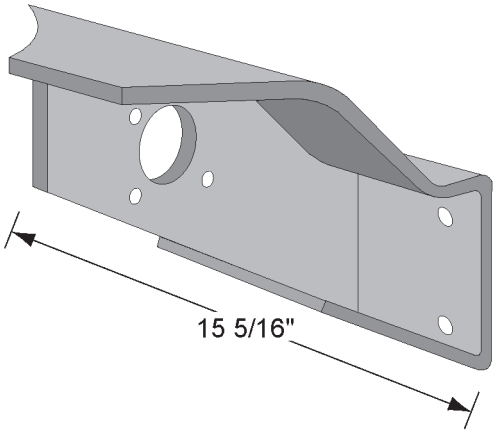

MOUNT - PUMP, I.H.

0084745 MTM

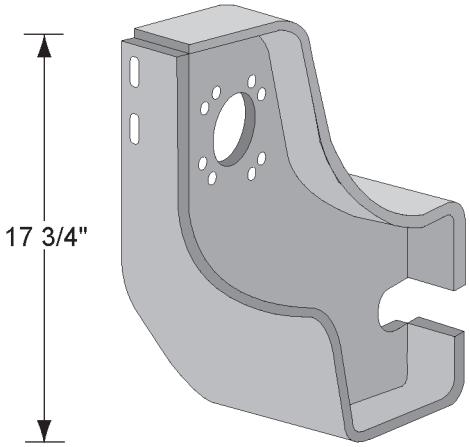

MOUNT - PUMP, KW, F-1

0500630 MTM

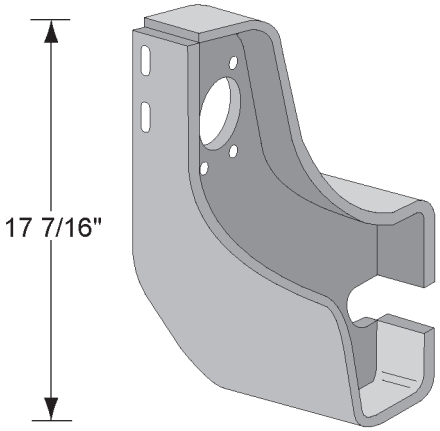

MOUNT - PUMP, I.H., E1

0500625 MTM

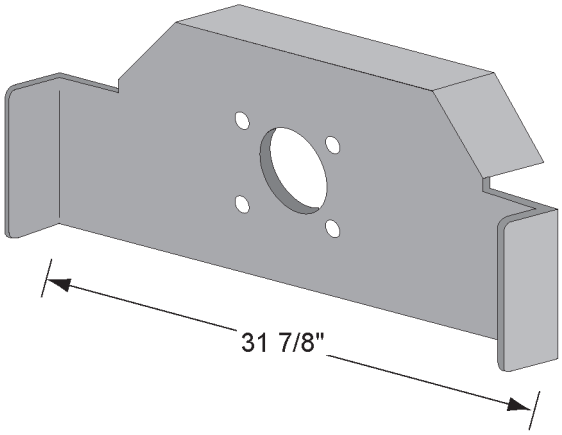

MOUNT - PUMP, FORD LT 9000

0084102 MTM

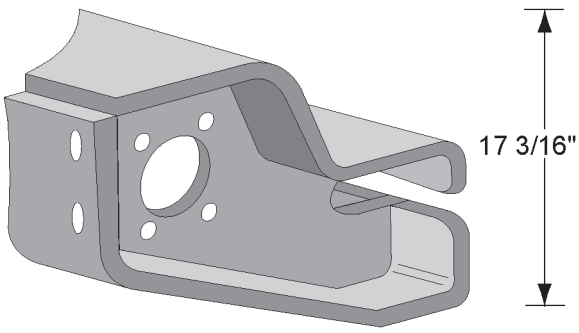

MOUNT - PUMP, STERLING CUMMINS 275

0500010 MTM

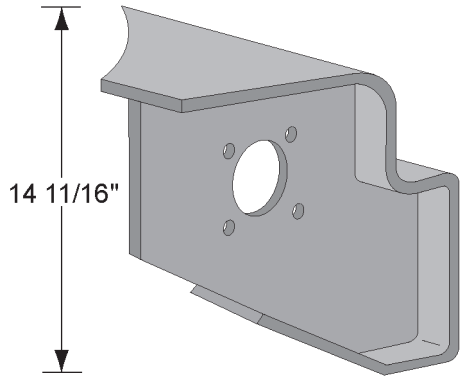

MOUNT - PUMP, FREIGHTLINER TYPE V

0500640 MTM

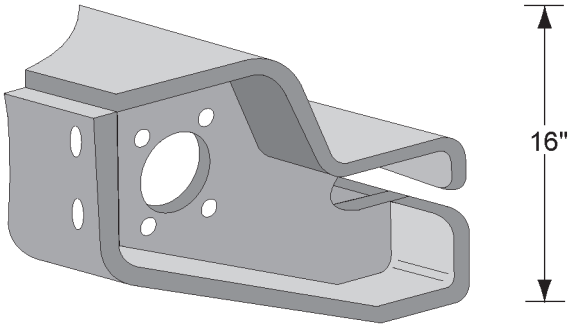

MOUNT - PUMP, FORD CUMMINS 257

0500635 MTM

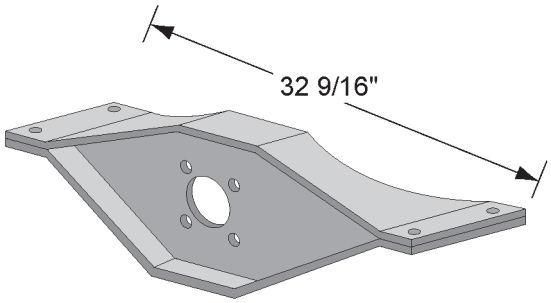

MOUNT - PUMP, FORD

0500025 MTM

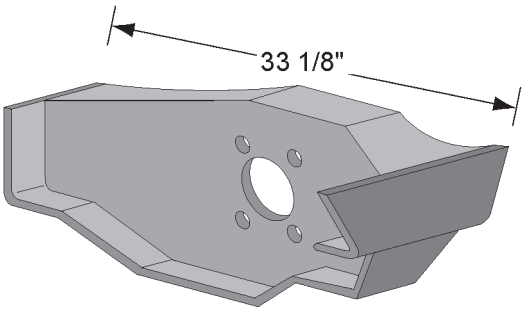

MOUNT - PUMP, PETERBUILT

0084150 MTM

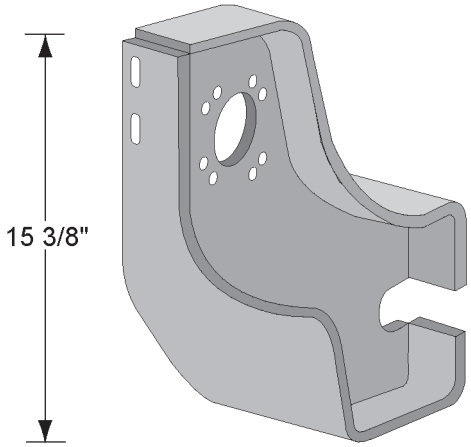

MOUNT - PUMP, PETERBUILT

1479601 MTM

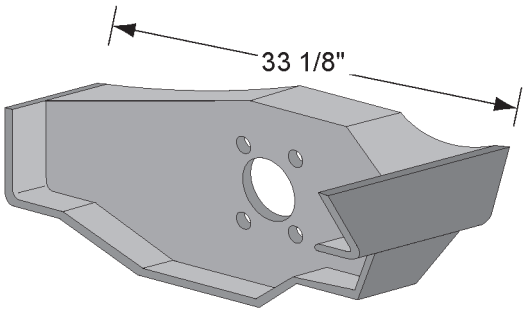

MOUNT - PUMP, AUTOCAR

0084180 MTM

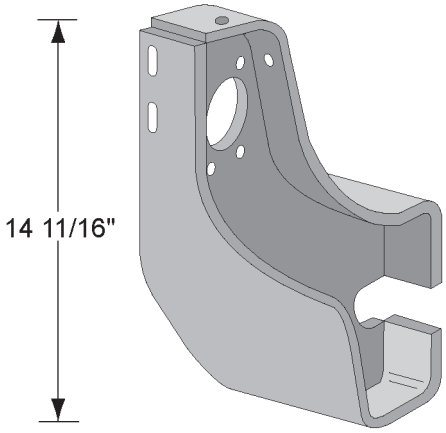

MOUNT - PUMP, VOLVO/AUTOCAR

1145003 MTM

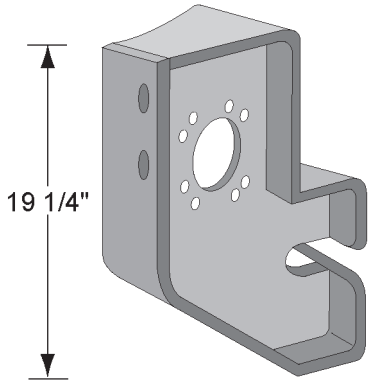

MOUNT - PUMP, OTC

0500040 MTM

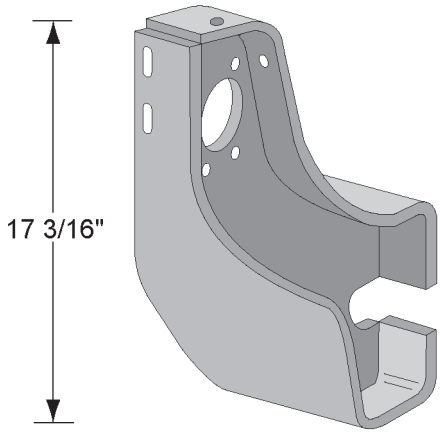

MOUNT - PUMP, LAFARGE

1105196 MTM

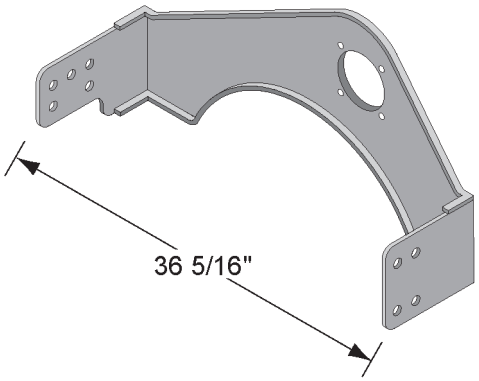

MOUNT - PUMP, FREIGHTLINER

1139962 MTM

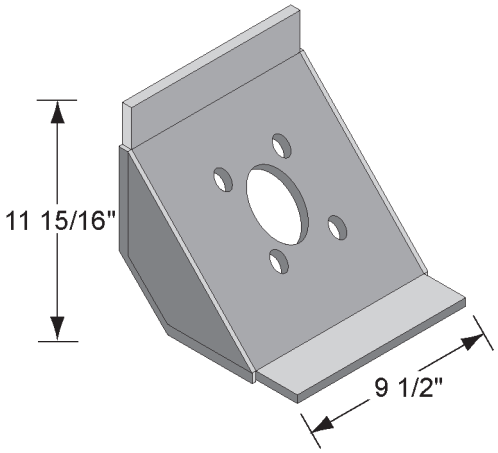

MOUNT - PUMP, VOVLO/AUTOCAR

1142836 MTM

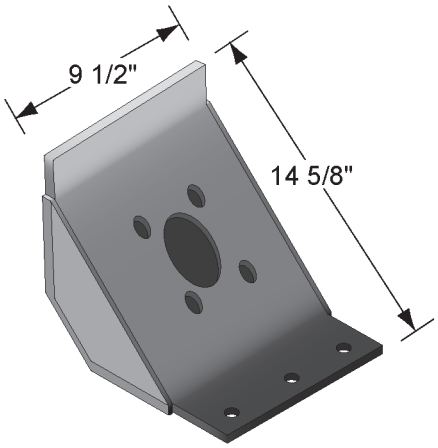

MOUNT - PUMP, VOLVO

1228876 MTM

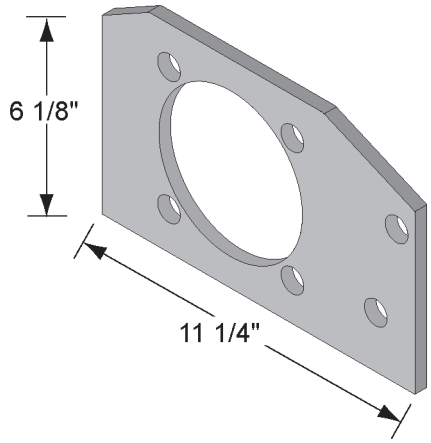

MOUNT - PUMP, VHD

1270773 MTM

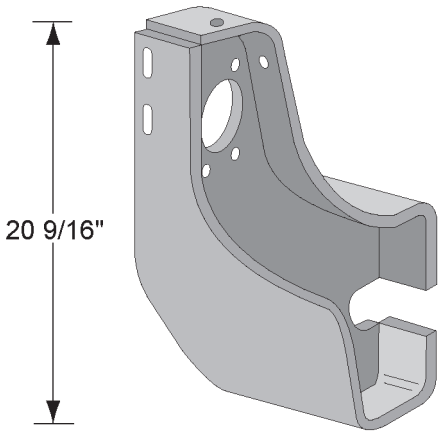

MOUNT - PUMP, STERLING CUMMINS

1238071 MTM

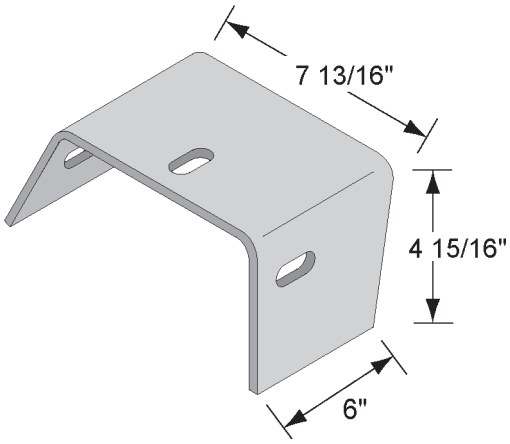

GUARD - PUMP, PTO, NARROW

1131275 MTM

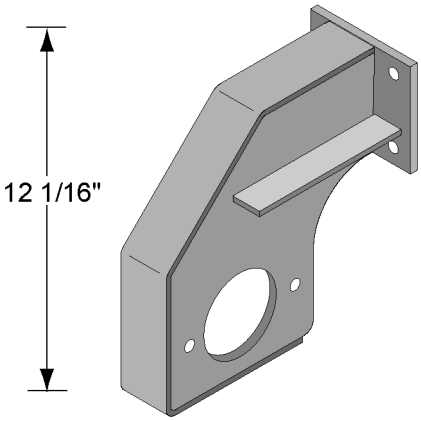

MOUNT - PUMP, INTERNATIONAL

1257046 MTM

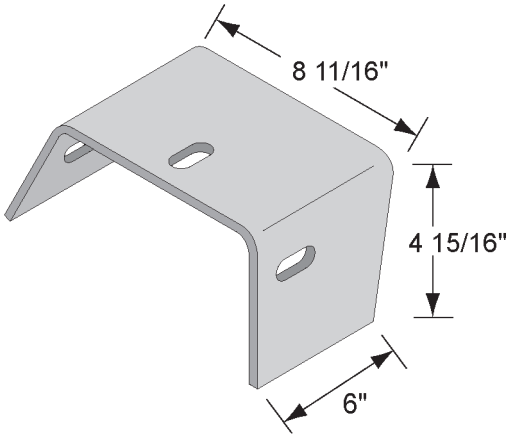

GUARD - PUMP, PTO, WIDE

1131280 MTM

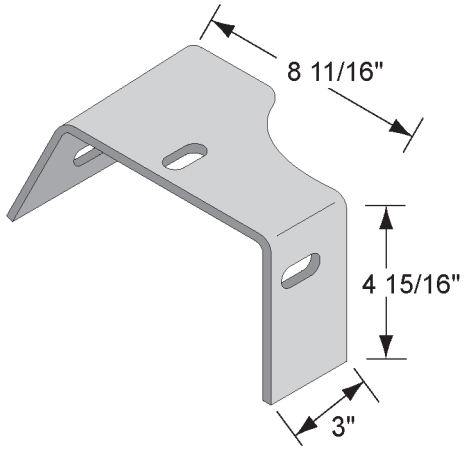

GUARD - PUMP, PTO, WIDE W/CUTOUT

1131794 MTM

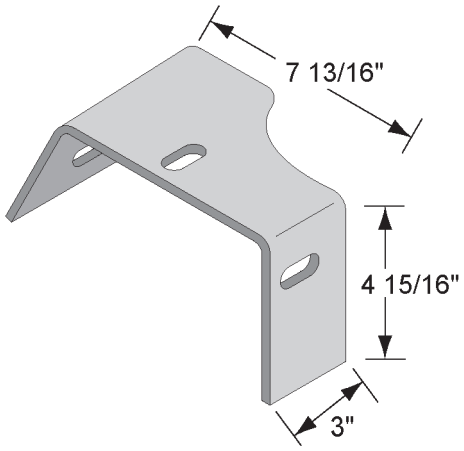

GUARD - PUMP, PTO, NARROW W/CUTOUT

1131789 MTM

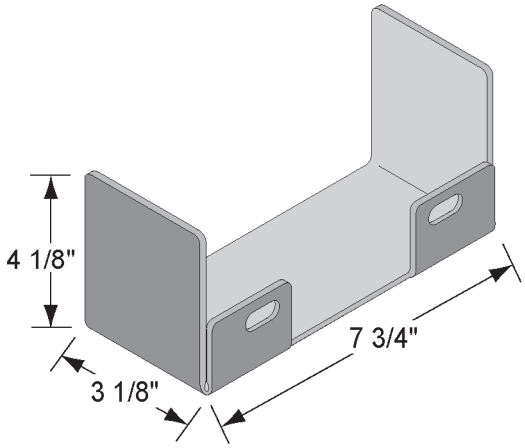

GUARD - PUMP, PTO, MACK

1132125 MTM

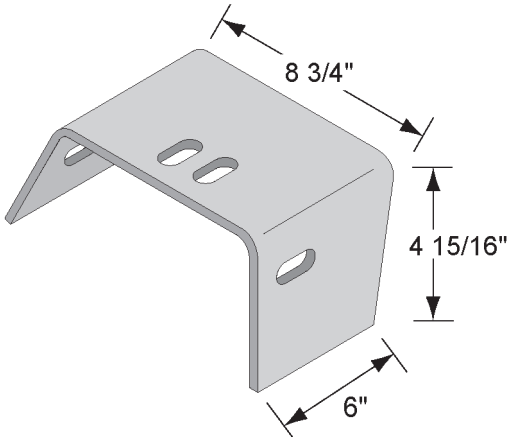

GUARD - PUMP, PTO, KW

1139350 MTM

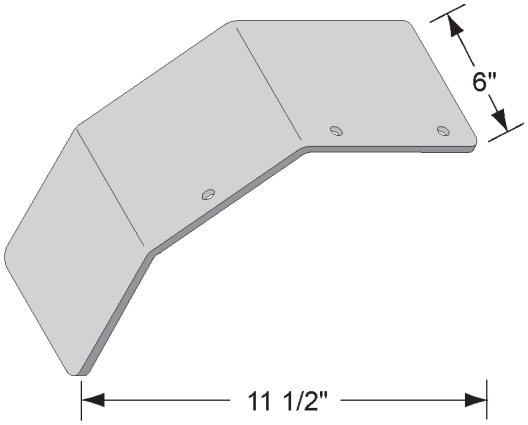

GUARD - SHAFT, PTO

1241076 MTM

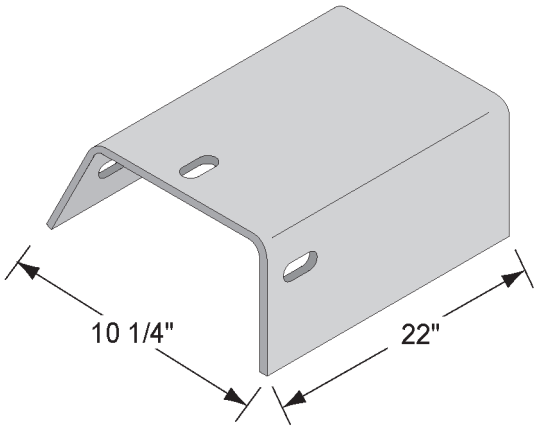

GUARD - PUMP, PTO, WIDE

1232219 MTM

PEDESTAL MOUNTING ANGLES

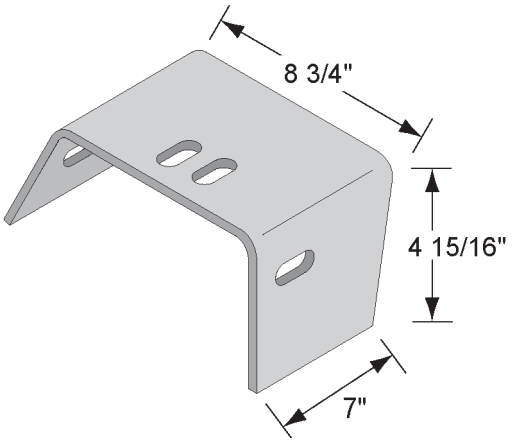

GUARD - PUMP, PTO, KW

1139351 MTM

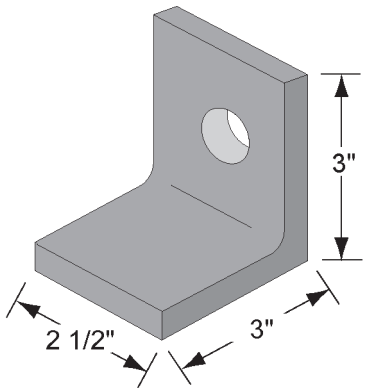

ANGLE - MOUNTNG, 1H/0H

0084004 MTM

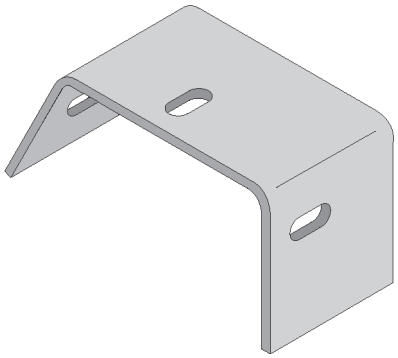

GUARD - PUMP, PTO, W/SLOTTED HOLES

0084396 MTM

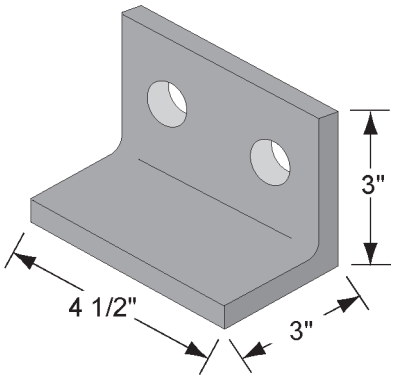

ANGLE - MOUNTING, 2H/0H

0150905 MTM

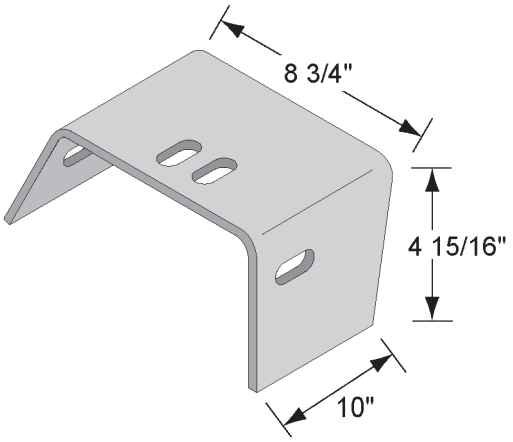

GUARD - PUMP, PTO, KW

1139354 MTM

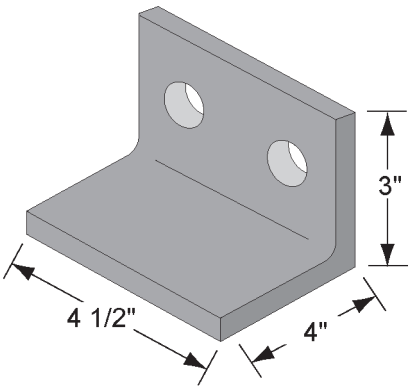

ANGLE - MOUNTING, 2H/0H

0150907 MTM

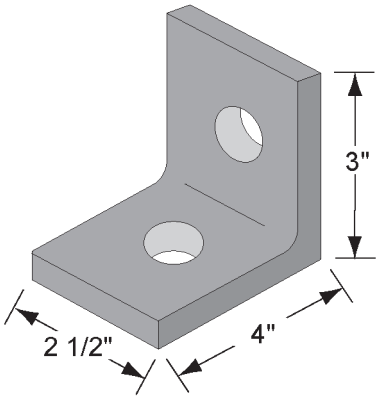

ANGLE - MOUNTING, 1H/1H

0084005 MTM

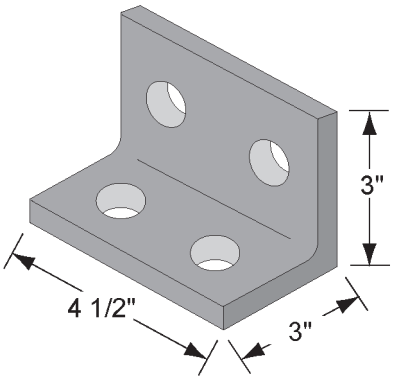

ANGLE - MOUNTING, 2H/2H

0150904 MTM

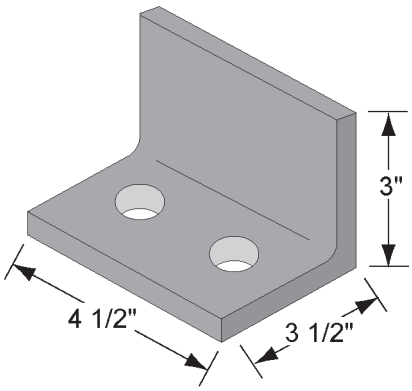

ANGLE - MOUNTING, 0H/2H

0150906 MTM

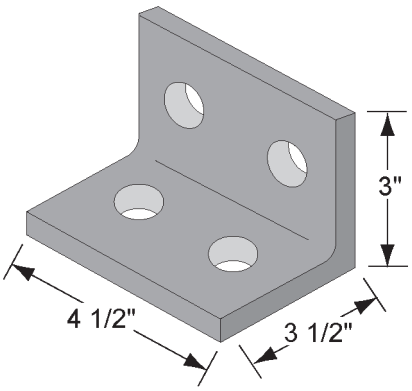

ANGLE - MOUNTING, 2H/2H

0150922 MTM

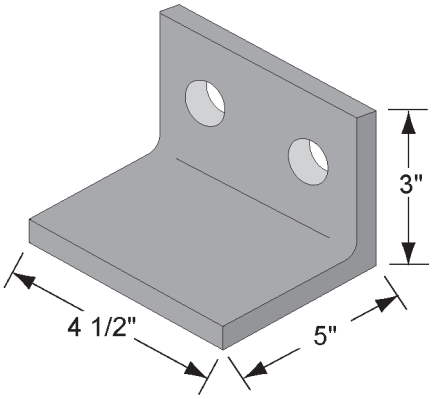

ANGLE - MOUNTING, 2H/0H

0084146 MTM

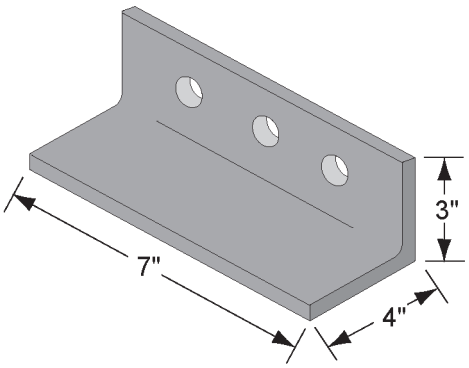

ANGLE - MOUNTING, 3H/0H

0084024 MTM

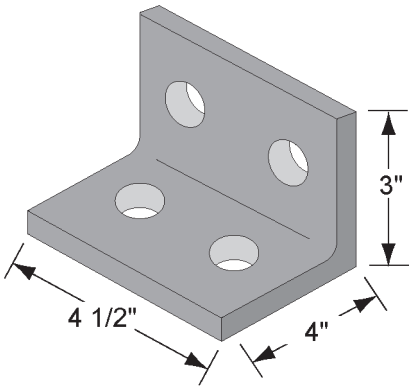

ANGLE - MOUNTING, 2H/2H

0150914 MTM

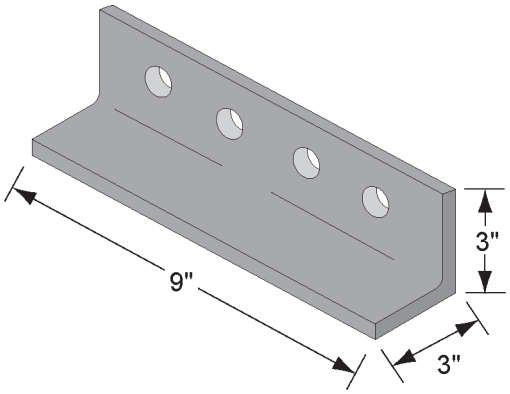

ANGLE - MOUNTING, 4H/0H

0084002 MTM

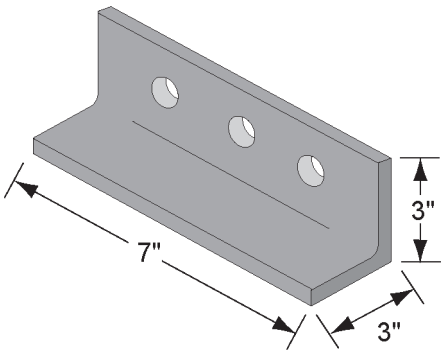

ANGLE - MOUNTING, 3H/0H

0084023 MTM

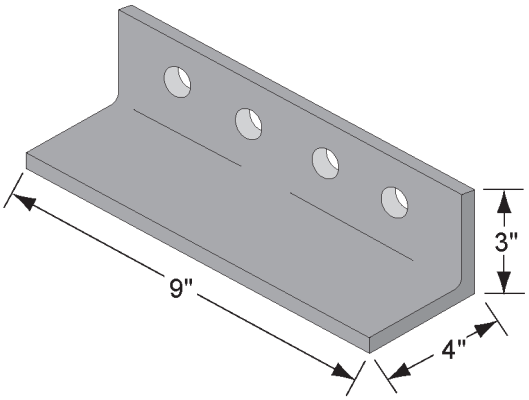

ANGLE - MOUNTING, 4H/0H

0500405 MTM

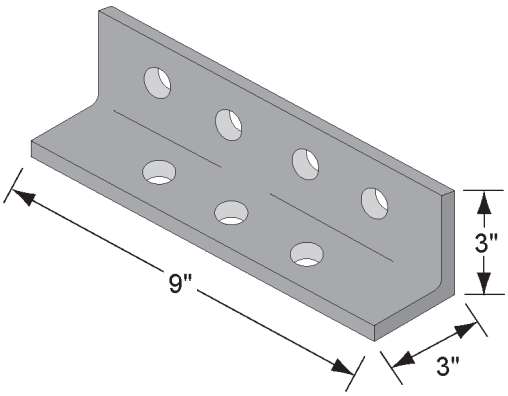

ANGLE - MOUNTING, 4H/3H

0150909 MTM

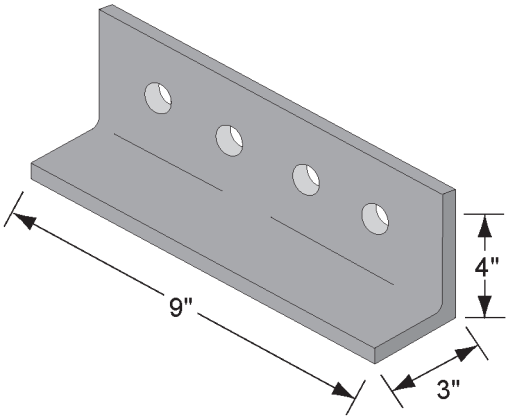

ANGLE - MOUNTING, 4H/0H

0084145 MTM

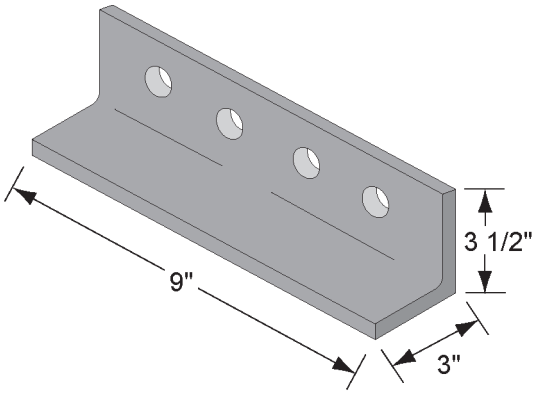

ANGLE - MOUNTING, 0H/4H

0150919 MTM

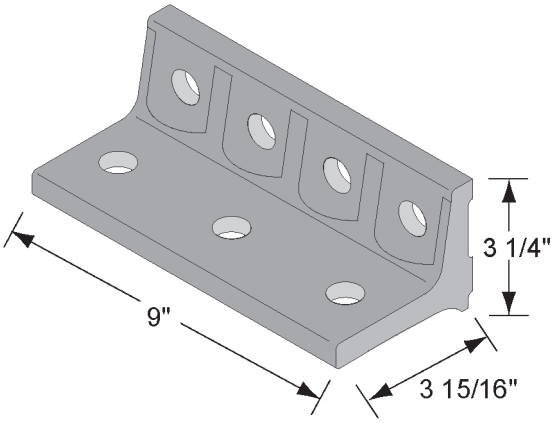

ANGLE - MOUNTING, 4H/3H

0150920 MTM

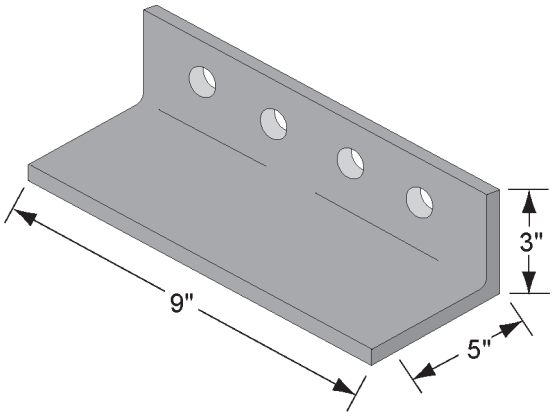

ANGLE - MOUNTING, 4H/0H

0084021 MTM

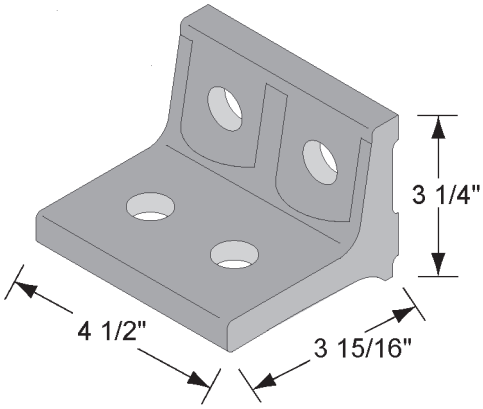

ANGLE - MOUNTING, 2H/2H

0150991 MTM

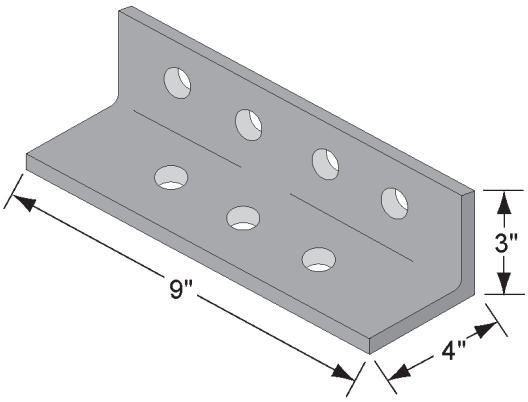

ANGLE - MOUNTING, 4H/3H

0084003 MTM

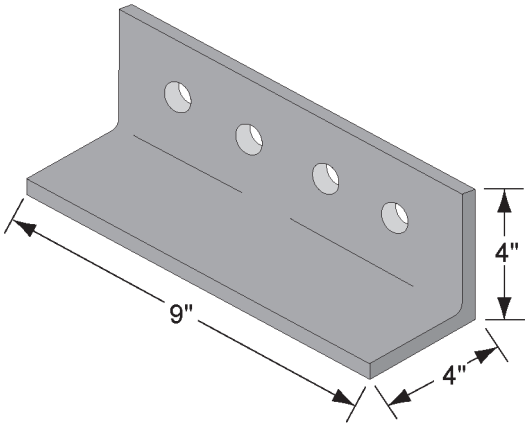

ANGLE - MOUNTING, 4H/0H

0084022 MTM

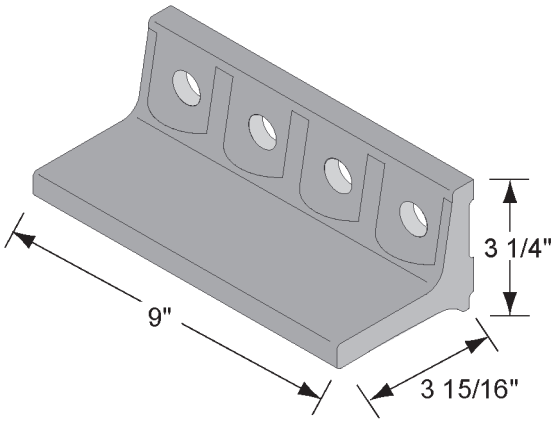

ANGLE - MOUNTING, 4H/0H

0150924 MTM

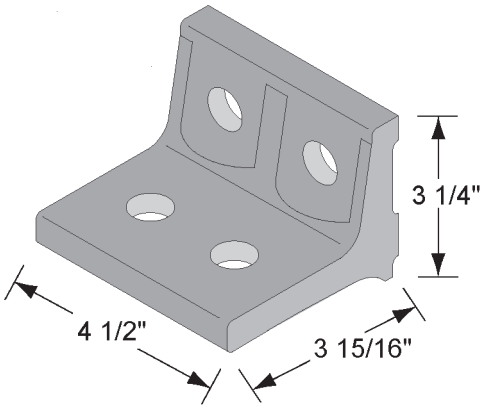

ANGLE - MOUNTING, 2H/0H

0150992 MTM

THIS PAGE INTENTIONALLY LEFT BLANK

THIS PAGE INTENTIONALLY LEFT BLANK

Accessories

DRIVE SOCKETS

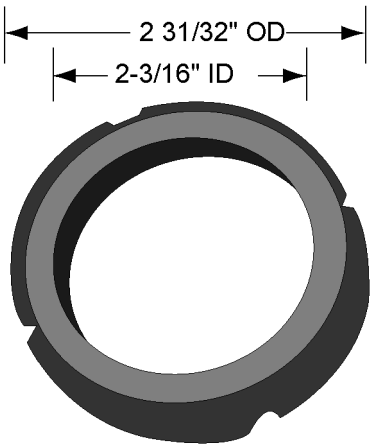

SOCKET - SPINDLE NUT, N-11
0100664 MTM

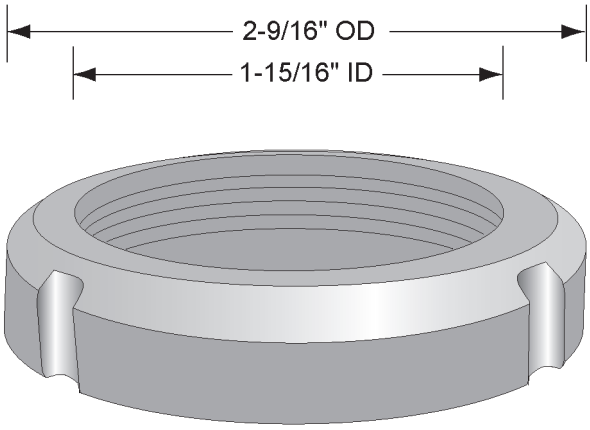

NUT - LOCK, ROLLER SHAFT, N-10
0082216 MTM

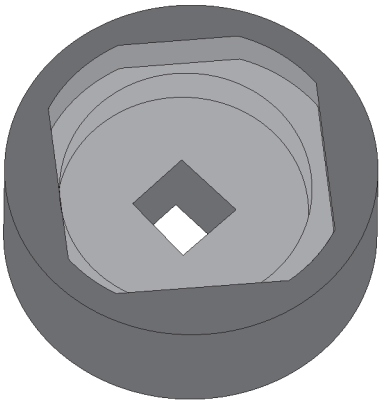

SOCKET - TAPERED KINGPIN CAP
0002047 MTM

HOOKS

HOOK - CHAIN
0115328 MTM

HARNESS - CHUTE SNAP
0016476 MTM

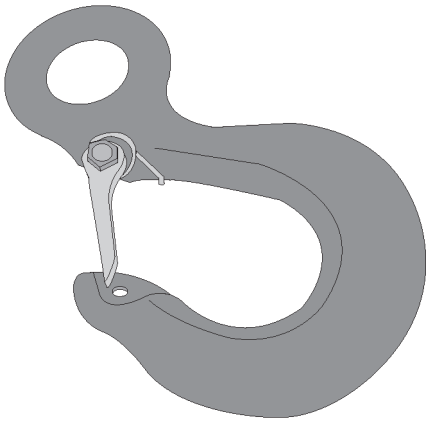

HOOK - W/LATCH ASSY, 1 TON, #320A
0012307 MTM

CHAIN - COLD SHUT, 7/16”

0012361 MTM

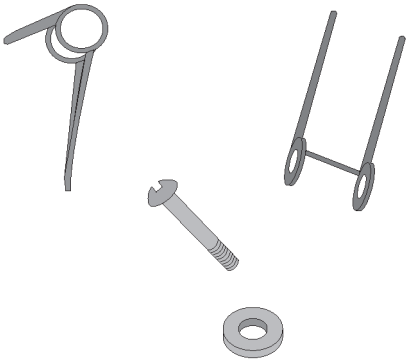

LATCH KIT - 5 TON, CROSBY

0012308 MTM

MOUNTING HARDWARE

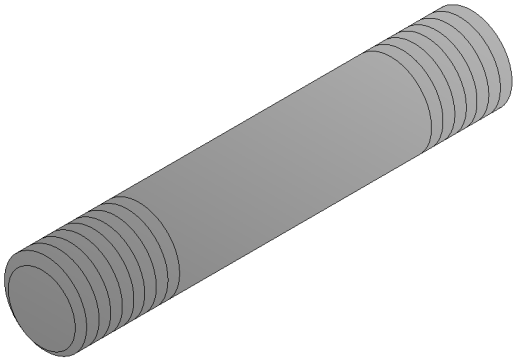

MOUNTING ROD - THREADED, PIVOT/MAIN, 7/8”

1362057 MTM

MUDFLAPS

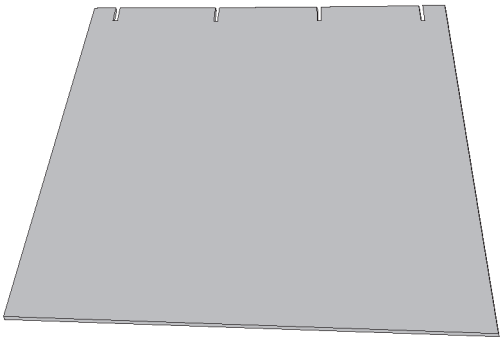

MUDFLAP - WHITE, 24” X 24”

0082651 MTM

MUDFLAP - WHITE, 24” X 28”

1133892 MTM

MUDFLAP - FLEX, 24” X 24”

0215203 MTM

MUDFLAP - ALUMINUM, 24” X 24”

1261528 MTM

MUDFLAP - TAW/BMIII, 12.9” X 9.25”

0085478 MTM

RUBBER PADS & STRIPS

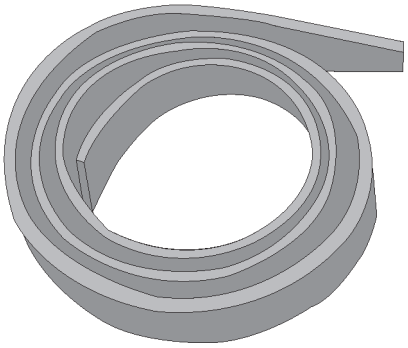

STRAP - WATER TANK, 2.5” ID, W/EDGE

0082526 MTM

STRIP - RUBBER, 1/8” X 2”

0215217 MTM

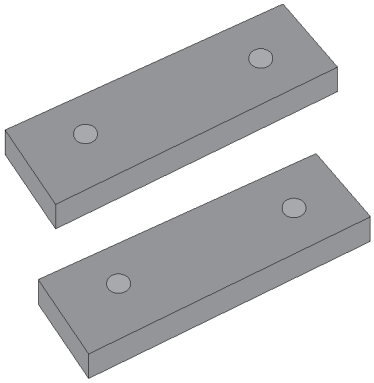

BUMPER - RUBBER, CCB HOPPER

0013702 MTM 1320359 CC

TOOL BOXES

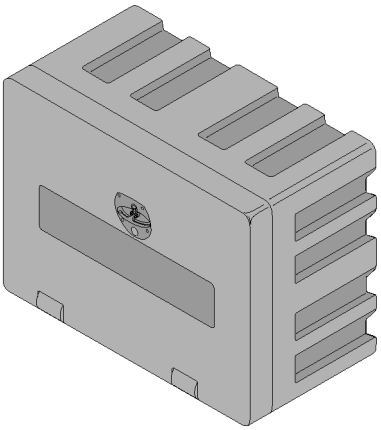

BOX-TOOL - POLY, 18”x24”x18”

1261632 MTM

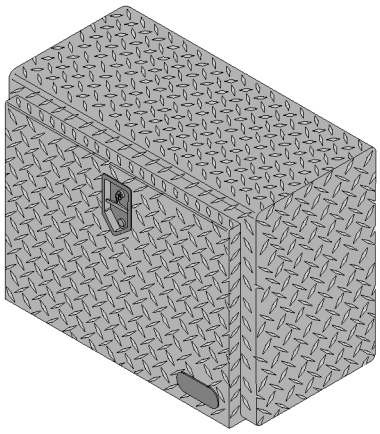

BOX-TOOL - ALUM, 18”x18”x30”

1236804 MTM

THIS PAGE INTENTIONALLY LEFT BLANK

THIS PAGE INTENTIONALLY LEFT BLANK

Index

Index

MANUFACTURER

ADVANCE

3-009-023 275
3-009-024 275
3-009-064 275
7400-00012 275
10017 276
11292 72
11295 72
11305 72
11308 436
11316 72
11317 72
11380 436
12109 111
12118 109
12357 276
12676 275
12677 276
12678 276
12682 276
12687 275
12688 275
12690 275
12708 275
13106 274
13187 436
13188 436
13209 275
14218 274
14220 274
14437 73
14454 90
14667 107
14669 107
15220 108
15249 111
15422 352
15423 352
15424 352
15453 274
15777 274
16930 352
17044 216
17356 274
19308 72
19479 274
19480 108
20208 109
20210 110
20366 110
20371 72
23236 216
23747 158
28219 112
40188 160
40190 160
40191 160
40285 160
40288 160
40289 160
40293 160
40375 160
40391 159
40435 159
40436 159
40442 159
40454 352
40820 158
40975 159
40988 158
40989 158
41238 158
41239 158
41428 160

BECK

36312 228
40300 10
43000 30

CBMW

10000590 203
10210200 365
10210300 365
10350038 203
10350592 203
10350594 203
10530092 11
10610121 75
10610701 75
10801810 227
10801815 227
10802203 228
10802213 227
10802214 228
10802215 228
50353001 203
50353002 203
50353021 203
50353022 203
50353023 203
50353024 203
50353031 203
50353032 203
50353061 203
50412100 229
50412104 229
50412106 229
50412108 229
80100782 276
80105734 228

80105735 228
80151692 144
80412124 230
80412125 230
80550136 216
80572116 295
80572117 295
80572118 295
90105415 161
90117100 91
90117101 91
90117125 91
90117126 91
90117150 91
90117151 91
90232100 345
90240160 90
90251200 145
90253214 144
90353000 203
90353003 ..... 203, 438
90353065 203
90353067 203
90512820 ..... 10, 12
90520108 11
90522436 11
90522489 11
90522495 11
90532300 11
90540900 31
90550500 64
90550700 64
90550800 64
90570220 190
90600105 438
90601911 162
90602404 161
90602411 161
90602412 161
90602503 161
90602505 161
90611300 152
90640687 ..... 74, 75
90640688 ..... 74, 75
90648001 75
90648002 75
90648003 74
90648004 74
90648005 74
90648006 74
90648100 74
800550425 216

CCB

12-500-001 100
103454 366
990141 317
990143 318
1010409 231
1030607 204
1031245 100
1031690 231
1031797 102
1031798 101
1032687 101
1032688 101
1032689 102
1032690 102
1050015 162
1050174 192
1050371 204
1050372 204
1050397 297
1050435 280
1050474 192
1050503 231
1050506 216
1050507 217
1050599 101
1050659 101
1050660 101
1050661 101
1070063 280
1090495 230
1110389 102
1110477 100
1111039 193
1170013 278
1170023 354
1170051 354
1170272 277
1300138 204
1300139 204
1300168 298
1300326 297
1300470 295
1300471 299
1300472 298
1300473 299
1300553 296
1320233 192
1320441 230
1320495 216
1400311 231
1400424 440
1400469 231
1500163 366
1520020 278
1520051 279
1520077 278
1520080 278
1520081 278
1520160 318

1520197 277
1520541 233
1520542 277
1520926 317
1520987 277
1521106 317
1521121 317
1521143 317
1521161 318
1521162 318
1521166 277
1521182 318
1540008 143
1540175 143
1540212 100
1540229 100
1540266 144
1540302 143
1540356 143
1540433 143
1540436 143
1540456 144
1540460 144
1540466 143
1540467 142
1570357 279
1571667 353
1571988 354
1573535 279
1574037 353
1575285 354
1575967 353
1610256 317
1610257 353
1690156 204
1690157 204
1690163 280
1690185 353
1690529 193
1690659 102
1690679 193
1690710 279
1691040 279
1710035 233
1710937 233
1711211 234
1711349 234
1720144 234
1720187 233
1720971 279
1721865 233
1920259 232
5002358 204
5010697 232
5010866 230
5010878 232
5010884 230
5011142 232
5011143 231
5011308 232
5021191 204
5021192 204
5021193 204
5021637 296
5022847 204
5022900 204
5022972 204
5023100 440
5023289 440
5023438 298
5023479 299
5023503 297
5024181 298
5024281 298
5024891 100
5024898 297
5025429 76
5025430 76
5025763 76
5026088 76
5026089 76
5027115 ..... 191, 438
5027774 297
5028025 299
5028230 163
5028231 163
5028235 163
5028354 296
5028371 298
5028526 ..... 297, 298
5029319 296
5029322 296
5040137 ..... 191, 439
5040141 13
5040593 162
5040792 31
5040809 14
5040810 14
5040845 438
5040849 ..... 192, 439
5040852 ..... 191, 439
5040900 65
5041067 ..... 191, 439
5041233 162
5041331 32
5041374 ..... 192, 439
5041375 65
5041413 438
5041860 37
5041861 34
5041869 191
5041914 192

5041915 ..... 193, 439
5041916 193
5041918 35
5041944 144
5041983 32
5042017 162
5042029 65
5042161 12
5042165 13
5042167 13
5042465 164
5042694 65
5042881 33
5043415 191
5043558 142
5043736 14
5043739 13
5043740 15
5043748 14
5043760 13
5043766 13
5043767 15
5043782 14
5043786 14
5044040 33
5044192 34
5044197 35
5044292 15
5044372 36
5044378 36
5050618 353
5050814 280
5050879 ..... 162, 296
5051667 164
5051720 164
5051772 164
5051833 163
5051978 440
5052060 164
5052111 440
5052442 280
5052444 280
5052492 280
5053410 316
5053745 278
5054159 280
5054169 279
5054793 91
5054794 91
5054795 91
5054804 91
5054930 163
5055145 163
5070476 234
5090192 234
5090223 232
10000590 204

DEUTSCH

0411-291-1405 264
0411-310-1605 264
0460-202-20141 266
0460-204-08141 266
0460-204-12141 266
0460-215-16141 266
0462-201-16141 266
0462-202-16141 266
0462-203-04141 266
0462-203-12141 266
2411-001-2405 264
2411-002-1805 264
2414-001-2486 264
2414-002-1800 264
2428-004-2405 265
112263-90 264
112264 264
114010 264
114020-90 264
114021 264
DT04-2P 262
DT04-3P 262
DT04-4P 262
DT04-6P 262
DT04-8P 262
DT06-2S 262
DT06-3S 262
DT06-4S 262
DT06-6S 262
DT06-8S 262
DTM04-2P 262
DTM04-2P-E004 263
DTM04-2S-E004 263
DTM04-3P 262
DTM04-4P 263
DTM04-6P 263
DTM04-12PA 263
DTM06-2S 262
DTM06-3S 263
DTM06-4S 263
DTM06-6S 263
DTM06-12SA 263
HD24-18-8PN 261
HD30-24BT 265
HD34-18-8PN 261
HD34-18-8SN 261
HD34-18-14-PN 261
HD34-24-31PT 261
HD36-18-14SN 261
HD36-24-31ST 261
HDC34-24 265
HDC36-24 9723 265
HDP24-18-14PN 261
HDP24-24-9SN 261

HDP24-24-16PE 261
HDP24-24-16PN 261
HDP24-24-16SN 261
HDP24-24-18PN 261
HDP24-24-19PN 262
HDP24-24-21PN 262
HDP24-24-23PN 262
HDP24-24-23SN 262
HDP24-24-29PE 262
HDP24-24-31PN 262
HDP24-24-31PT 262
HDP26-18-14SN 261
HDP26-24-16PN 261
HDP26-24-16SE 261
HDP26-24-16SN 261
HDP26-24-18SN 261
HDP26-24-19SN 262
HDP26-24-21SN 262
HDP26-24-23PN 262
HDP26-24-23SN 262
HDP26-24-29SE 262
HDP224-24-9PN 261
HDT-48-00 266
W2P 263
W2S-P12 263
W3P 263
W3S 263
W4P 263
W4S 263
W6P 263
W6S 263
W8P 263
W8S 263
W12P 263
W12S 263
WHDS-18-1 265
WHDS-18-2 265
WHDS-24-1 265
WHDS-24-2 265
WM-2P 263
WM-2S 263
WM-3P 263
WM-3S 263
WM-4P 263
WM-4S 263
WM-6P 263
WM-6S 263
WM-08PA 264
WM-08SA 264
WM-12P 264
WM-12S 264

JAEGER

59150-1 205
59152-1 205
59158-1 205
80699-1 205
80703-91 205
80703-91S 205
JAE80699-1 205
JCP644 205
JCP2613 205
JCP2614 205
JCP2615 205
JCP2616 205
JCP4516 205

KIMBLE

11413-03692 300
6356012 320
C55-02586-00 217
C61-25004-00 ..... 166, 299
C64-75200-00 166
C64-98250-00 ..... 165, 299
C79-75200-00 166
C95-00100-15 281
C95-03000-25 318
C95-05000-25 319
C96-34375-03 299
CP520-1-B-0-12D-H 321
CP-5201B012DHM 321
CP5301BO12DH 321
E14-10001-00 235
E15-10001-02 235
E16-10002-01 324
E17-00150-00 324
E17-00195-00 324
E93-320411-0R 235
H7-01278-00 319
H10-25500-00 349
H10-25500-01 347
H11-2391-00 347
H11-20260-30 390
H11-23910-00 320
H11-23911-00 ..... 320, 347, 349
H11-23912-00 349
H11-25600-01 ..... 322, 347
H11-109379-01 390
H12-21521-00 ..... 321, 322
H12-21524-00 322
H12-22701-00 323
H12-22702-01 321
H12-23910-00 ..... 323, 347
H12-25001-00 ..... 319, 347
H12-25500-00 ..... 319, 347, 349
H12-26000-01 349
H12-31244-00 323
H12-34001-00 322
H12-34002-00 323
H31-10001-23 390
H31-20003-00 390
H32-11021-30 390
H41-10013-00 145
H41-10100-00 146

H42-10011-00 145
H42-20010-00 145
H42-20021-02 146
H43-10010-00 145
H62-N0402-00 206
H70-19438-00 152
H71-01022-00 320
H71-01277-00 319
H71-12009-00 319
H71-12013-00 322
H71-12015-00 320
H71-12017-00 320
H71-12023-00 323
H71-12057-00 323
H80-20156-70 390
H80-20260-30 390
H80-21521-00 ..... 347, 349
H90-10012-00 354
H90-10021-00 355
H90-10026-00 354
H92-01917-06 152
K11-25600-01 321
S01-00AB00-00 17
S01-00AD0-00 17
S01-00CK0-00 16
S01-00SC0-00 17
S01-00Y00-00 16
S02-00AA0-00 17
S03-00BB0-00 164
S03-00BF0-00 ..... 165, 440
S03-00CC00-00 ..... 165, 441
S03-03440-00 165
S05-00DN0-00 77
S05-00DP0-00 77
S05-00DR00-00 77
S05-00DS0-00 77
S05-00DT0-00 77
S05-00DU0-00 77
S05-00100-00 76
S05-00110-00 76
S05-00970-00 78
S05-01890-00 77
S05-01960-00 78
S05-02070-00 76
S05-02080-00 76
S05-02490-00 77
S07-000K0-00 165
S07-00200-01 165
S07-00200-02 165
S07-00540-00 166
S07-00580-00 166
S08-00860-00 217
S09-00BN0-01 76
S09-00BN0-02 76
S09-01590-00 166
S10-000S-00 166
S12-00BL0-00 441
S12-00CC0-00 442
S12-00CM0-00 441
S012-280 441
S13-00BQ0-00 37
S13-00550-00 441
S14-00AA0-00 167
S14-000K0-00 167
S15-000F0-00 206
S15-000F0-02 206
S15-000F0-03 206
S15-000F0-04 206
S15-000F0-05 206
S15-000F0-06 206
S15-000F0-08 206
S15-000F0-09 206
S15-000F0-10 206
S15-000F0-12 206
S15-000F0-13 206
S15-000N0-01 206
S17-00250-00 442
S42-00011-00 217
S220A047 145
T91-00002-00 102

LONDON

700041 300
700068 301
HH-00104-025 207
HH-00116-053 207
HH-00356-140 207
HH-00835-003 236
HH-00878-002 281
HH-01070-000 237
HH-01095-007 281
HH-01145-003 236
HH-01182-001 237
HH-01189-001 237
HH-01192-002 281
LM-1022 238
LM-1075 167
MA-6008 207
MA-29014 445
MA-31737-01 366
MA-35521 443
MA-35899 325
MA-36290 281
MA-37730 325
MA-37731-01 366
MA-37731-02 366
MA-37733 325
MA-37757 443
MA-37781 237
MA-37890-01 237
MA-37895 237
MA-38267 300
MA-38379 444

MA-38537 236
MA-38657 444
MA-38710 238
MA-38816 300
MA-38965-01 79
MA-38965-02 79
MA-38965-03 79
MA-38965-04 79
MA-38965-05 79
MA-38967-01 79
MA-38967-02 79
MA-38967-03 79
MA-38967-04 79
MA-38967-05 79
MA-39231 324
MA-39238 236
MA-39269 325
MA-39688 325
MA-39790 324
MA-39915 300
MA-39996 235
MA-39997 235
MA-39998 236
MA-39999 236
MB-29048 170
MB-29142 207
MB-29376 217
MB-35124 170
MB-35571 193
MB-36292-01 446
MB-36293-01 444
MB-36293-02 444
MB-37313 300
MB-37737-30 102
MB-38183 445
MB-38185 444
MB-38269 301
MB-38395 442
MB-38415 446
MB-38566 217
MB-38576 146
MB-38602 169
MB-38614 146
MB-38709 443
MB-38712 170
MB-38741 170
MB-38970 442
MB-38973 445
MB-39109-01 235
MB-39178 442
MB-39297 194
MB-39305 ..... 170, 443
MB-39308 ..... 170, 446
MB-39743 444
MB-39939 169
MB-40407-01 168
MB-40407-02 168
MB-40460 443
MB-40665 171
MB-40779-01 324
MB-40882 171
MB-40965 443
MB-42022-01 168
MB-42022-02 168
MC-22473 18
MC-24544 17
MC-28852 207
MC-29102 18
MC-30095 446
MC-31697 447
MC-32617 194
MC-33359 65
MC-33559 18
MC-35745-01 168
MC-36396 169
MC-37822 18
MC-38184-01 447
MC-38184-02 447
MC-38226-01 91
MC-38226-02 91
MC-38226-03 91
MC-38409 445
MC-38571 167
MC-38646 193
MC-38686 18
MC-38839 18
MC-38841 169
MC-38856 17
MC-38969-01 78
MC-38969-02 78
MC-38972-01 78
MC-38972-02 78
MC-39314 65
MC-39782 168
MC-39877 169
MC-39878 167
MC-39880 169
MC-39883 168
MC-40030 167
MC-40590 66
MC-41161 171
MC-41165 171
MD-32089-00 207
MD-32123-00 207
MD-35482-01 446
MD-35696-01 91
MD-35696-02 91
MD-35696-03 91
MD-35696-04 91
MD-37051-01 91
MD-37051-02 91
MD-37287R 146

MD-39043-01 91
MD-39043-02 91
MD-39043-03 91
MD-39043-04 91
MD-39432 445
MD-39666 38
MD-39753 38
MD-40195 39
MD-40422 146
MD-40664 168
MM-6009 207
MM-6606 207
MM-6607 207
MM-19850 281
MM-22769 207

MTM

1HB799 266
1HR981 405
1KK819 123
1KS15 145
2BH166 ..... 395, 399, 407
2BH170 ..... 395, 399, 403, 409, 413
2BH175 ..... 395, 399
2DE514 276
2HB58 261
2HB192 263
2HB270 263
2HP105 368
3HB769 114
3HB773 129
3HS768 ..... 117, 129
3KK435 123
3KK436 123
3KK439 123
4GX31 ..... 207, 213, 313
4HS17 ..... 133, 135, 137, 139
6HB202 108
6HD689 113
6HR634 266
8HA490 123
8HR412 129
8HR413 129
8KK149 263
8KK498 262
0000259 ..... 190, 194
0000429 356
0000436 ..... 354, 355, 358
0000470 286
0000471 285
0000700 371
0000701 372
0000702 372
0000703 372
0000704 371
0000707 375
0000708 375
0000709 375
0000710 375
0000711 375
0000712 375
0000713 375
0000714 375
0000715 375
0000716 ..... 375, 376
0000717 375
0000718 375
0000719 375
0000720 375
0000721 375
0000722 375
0000723 375
0000724 375
0000725 375
0000726 375
0000727 375
0000729 375
0000730 375
0000731 375
0000732 375
0000733 375
0000734 375
0000735 375
0000736 375
0000737 375
0000738 375
0000739 375
0000740 375
0000741 375
0000742 375
0000743 375
0000744 375
0000745 375
0000746 375
0000747 375
0000748 375
0000749 375
0000750 375
0000751 375
0000752 375
0000753 375
0000754 375
0000760 371
0000774 276
0000800 260
0000801 260
0000805 257
0000806 257
0000807 257
0000808 257
0000809 257
0000810 257
0000811 257

0000812 257
0000813 257
0000814 257
0000815 257
0000816 257
0000817 257
0000818 257
0000819 257
0000820 257
0000821 257
0000822 ..... 257, 260
0000823 257
0000824 257
0000825 257
0000826 257
0000827 257
0000828 257
0000829 257
0000830 260
0000833 260
0000834 260
0000835 257
0000836 257
0000837 257
0000838 257
0000839 257
0000840 257
0000841 258
0000842 258
0000843 258
0000844 258
0000845 258
0000846 258
0000847 258
0000848 258
0000849 258
0000850 258
0000851 258
0000852 258
0000853 258
0000854 258
0000855 258
0000856 258
0000857 258
0000858 258
0000859 258
0000861 261
0000884 260
0001001 290
0001008 290
0001009 290
0001188 403
0001619 433
0001670 ..... 429, 431, 433
0001671 433
0001675 ..... 429, 433
0001691 387
0001739 367
0002000 370
0002040 267
0002041 267
0002047 480
0002060 25
0002063 25
0002064 26
0002113 368
0002115 368
0002225 368
0002227 387
0002228 365
0002243 364
0002245 364
0002257 365
0002266 364
0002268 364
0002269 367
0002313 367
0002408 ..... 387, 389
0002438 369
0002439 368
0002457 368
0002465 369
0002468 369
0002471 369
0002473 369
0002494 387
0002509 250
0002515 387
0002522 387
0002523 325
0002541 250
0002553 363
0002566 362
0002567 362
0002569 363
0002571 362
0003111 364
0003112 364
0003124 364
0003151 364
0003202 362
0003203 363
0003204 363
0003208 362
0003209 362
0003211 363
0003212 362
0003213 362
0003214 363
0003215 363
0003219 362
0003220 362

0003251 363
0003253 363
0003257 363
0003263 362
0003264 363
0003265 363
0003266 362
0003267 362
0005340 ..... 202, 208, 209, 210
0005344 205
0005365 ..... 202, 208
0005711 423
0010011 ..... 280, 288
0010012 ..... 276, 280, 288
0010013 280
0010015 280
0010021 279
0010022 280
0010024 277
0010025 280
0010037 164
0010041 163
0010053 279
0011010 12
0011136 36
0011234 175
0011390 65
011534R 399
0011539 278
0011801 317
0011844 280
0011873 440
0012020 13
0012066 ..... 415, 419
0012067 419
0012103 191
0012149 91
0012179 34
0012181 33
0012190 162
0012237 91
0012239 15
0012307 480
0012308 481
0012336 76
0012361 481
0012362 278
0012418 91
0012434 299
0012561 162
0012592 76
0012596 163
0012618 13
0012619 13
0012620 162
0012624 14
0012627 91
0012637 440
0012658 15
0012663 13
0012669 14
0012673 13
0012729 318
0012735 353
0012743 318
0012757 36
0012764 33
0012903 423
0012937 425
0012945 387
0012983 341
0013010 13
0013050 14
0013070 14
0013133 318
0013313 438
0013354 143
0013692 372
0013702 482
0013752 100
0013820 144
0013825 101
0013851 353
0013870 280
0014000 32
0014037 65
0014099 101
0014105 234
0014106 233
0014138 37
0014140 34
0014141 35
0014142 31
0014143 35
0014156 296
0014174 440
0014178 440
0014225 387
0014226 387
0014227 387
0014228 387
0014273 366
0014296 387
0014335 279
0014398 144
0014422 142
0014466 298
0014467 ..... 297, 298
0014482 423
0014527 65
0014544 65
0014545 14

0014546 32
0014553 ..... 277, 331
0014632 ..... 417, 421
0014685 387
0014686 387
0014709 ..... 415, 419
0014710 417
0014724 417
0014745 144
0014750 279
0014759 233
0014770 297
0014779 233
0014785 234
0014848 232
0014860 387
0014885 419
0014942 277
0014958 317
0014960 318
0014966 289
0014969 143
0015037 421
0015056 101
0015065 423
0015094 102
0015096 101
0015097 101
0015098 102
0015147 163
0015190 425
0015210 164
0015222 163
0015225 419
0015228 421
0015232 423
0015238 423
0015239 423
0015242 298
0015256 423
0015270 423
0015273 299
0015325 232
0015335 232
0015336 231
0015350 440
0015356 297
0015366 297
0015371 296
0015378 423
0015403 423
0015405 425
0015448 419
0015469 423
0015475 234
0015540 353
0015643 163
0015662 163
0015664 164
0015763 423
0015792 101
0015796 102
0015802 317
0015809 425
0015821 102
0015824 ..... 415, 419
0015860 280
0015876 144
0015878 143
0015888 100
0015920 ..... 279, 289
0015959 234
0016082 ..... 415, 419
0016083 ..... 415, 419
0016084 298
0016085 299
0016088 313
0016090 295
0016092 297
0016093 ..... 415, 419
0016094 415
0016095 415
0016096 ..... 415, 419
0016098 ..... 415, 419
0016099 ..... 415, 419
0016100 204
0016102 ..... 203, 204, 206
0016104 ..... 203, 204, 206
0016105 ..... 203, 204
0016110 ..... 203, 204, 206
0016111 ..... 203, 204, 206
0016112 ..... 203, 204, 206
0016113 ..... 203, 204, 206
0016114 ..... 203, 204, 206
0016117 ..... 203, 204, 206
0016118 ..... 203, 204, 206
0016209 296
0016213 259
0016253 417
0016289 76
0016292 76
0016295 299
0016306 425
0016315 423
0016317 423
0016375 ..... 229, 231
0016377 ..... 417, 421
0016378 ..... 229, 230
0016381 216
0016382 217
0016384 164
0016386 193

0016391 417
0016394 298
0016395 231
0016397 143
0016406 ..... 415, 419
0016407 ..... 415, 419
0016410 216
0016412 296
0016418 143
0016421 193
0016422 ..... 193, 439
0016423 193
0016424 193
0016426 ..... 191, 439
0016427 192
0016428 ..... 191, 439
0016435 232
0016437 ..... 229, 230
0016439 ..... 229, 231
0016446 297
0016447 ..... 192, 439
0016448 298
0016449 298
0016450 439
0016450A 191
0016454 192
0016455 ..... 191, 438
0016458 ..... 162, 296
0016460 191
0016465 192
0016467 162
0016468 ..... 415, 419
0016469 100
0016475 415
0016476 480
0016477 295
0016478 100
0016489 316
0016502 278
0016503 279
0016506 354
0016507 354
0016510 317
0016511 318
0016512 318
0016513 233
0016515 317
0016518 330
0016521 366
0016530 423
0016531 423
0016532 ..... 415, 419
0016533 ..... 415, 419
0016534 415
0016535 ..... 417, 421
0016536 ..... 415, 419
0016540 ..... 417, 421
0016550 ..... 229, 230
0016551 232
0016552 230
0016553 ..... 230, 231
0016555 259
0016556 259
0016557 259
0016558 259
0016559 259
0016560 259
0016561 259
0016562 259
0016563 259
0016564 259
0016565 259
0016566 259
0016567 259
0016568 259
0016569 259
0016580 260
0016581 260
0016582 260
0016583 260
0016587 259
0016592 354
0016593 ..... 417, 421
0016595 277
0016657 164
0016668 15
0016669 14
0016692 415
0016697 417
0016754 ..... 415, 419
0016756 419
0016824 353
0016875 ..... 368, 417, 421
0016887 102
0016889 ..... 415, 419
0016890 ..... 415, 419
0016900 423
0016901 423
0016906 415
0016908 230
0016925 192
0016928 353
0016933 ..... 417, 421
0016934 ..... 417, 421
0016950 ..... 415, 419
0016952 ..... 415, 419
0016956 234
0016977 239
0016979 241
0016980 142
0016998 192
0017097 143

0017098 143
0036125 205
0036126 205
0036127 205
0036128 205
0036129 205
0036130 205
0036131 205
0036132 205
0036133 205
0036134 205
0036135 205
0040200 288
0041090 22
0042025 23
0042040 23
0043030 ..... 16, 23
0044000 52
0044030 49
0044047 218
0044048 219
0044049 219
0045285 ..... 211, 423
0046201 211
0046202 211
0046206 211
0046208 211
0046209 211
0046214 211
0046505 357
0046531 260
0046551 382
0046552 382
0046553 382
0046558 149
0067001 220
0067065 260
0067076 ..... 207, 213
0067077 ..... 207, 213
0067078 ..... 207, 213
0067079 ..... 207, 213
0067081 ..... 207, 213
0067082 ..... 207, 213
0067084 ..... 207, 213
0067085 ..... 207, 213
0067088 ..... 207, 213
0067089 ..... 207, 213
0082023 ..... 352, 354, 355, 356
0082080 67
0082087 218
0082090 286
0082097 290
0082098 290
0082109 286
0082117 274
0082201 ..... 209, 210
0082203 ..... 209, 210
0082206 ..... 202, 203, 204, 206, 208, 209, 210, 212
0082209 ..... 209, 210
0082210 ..... 209, 210
0082211 ..... 209, 210
0082212 ..... 209, 210
0082213 ..... 202, 208, 209, 210, 212
0082214 ..... 202, 208, 209, 210, 212
0082215 ..... 209, 210
0082216 ..... 202, 203, 204, 206, 208, 209, 210, 212, 480
0082218 ..... 202, 208, 209, 210
0082219 ..... 202, 208, 209, 210
0082240 283
0082242 282
0082243 283
0082256 303
0082280 19
0082290 20
0082300 21
0082315 22
0082320 21
0082322 147
0082368 448
0082369 447
0082378 453
0082379 453
0082386 275
0082388 288
0082393 286
0082394 289
0082397 285
0082399 285
0082401 452
0082403 ..... 277, 285, 289, 290
0082404 278
0082408 285
0082412 278
0082413 278
0082433 240
0082446 ..... 233, 240
0082491 241
0082492 240
0082521 238
0082526 481
0082573 283
0082650 438
0082651 481
0082652 75
0082660 209
0082661 ..... 209, 210
0082662 ..... 209, 210
0082663 209
0082664 210
0082665 209

0082666 210
0082667 210
0082986 239
0084002 473
0084003 474
0084004 471
0084005 472
0084007 84
0084021 474
0084022 474
0084023 473
0084024 472
0084026 451
0084029 457
0084030 457
0084040 465
0084102 466
0084105 379
0084107 381
0084125 466
0084145 473
0084146 472
0084149 466
0084150 467
0084180 468
0084277 458
0084292 458
0084296 457
0084325 456
0084396 471
0084468 449
0084560 380
0084561 379
0084562 380
0084563 379
0084574 460
0084604 84
0084688 381
0084689 381
0084690 379
0084691 380
0084692 380
0084693 379
0084695 380
0084698 379
0084745 466
0084799 455
0084817 447
0084960 448
0084965 448
0085089 ..... 437, 456
0085232 ..... 276, 286
0085260 66
0085283 238
0085284 ..... 228, 238
0085287 284
0085288 ..... 228, 238
0085426 ..... 294, 305, 313
0085427 306
0085435 305
0085441 306
0085442 306
0085443 302
0085447 ..... 296, 306
0085449 307
0085455 148
0085456 148
0085478 481
0085479 450
0085605 312
0085649 286
0085693 ..... 227, 241
0085699 ..... 319, 328
0085712 327
0085757 326
0085782 329
0085886 148
0086440 450
0086445 450
0087008 113
0087011 282
0087014 282
0087015 283
0087024 116
0087027 409
0087036 282
0100663 101
0100664 ..... 100, 480
0101018 ..... 429, 431, 433
0101251 284
0101291 283
0101293 291
0101294 291
0101306 290
0101563 284
0101564 284
0101634 ..... 277, 287
0106555 ..... 352, 355, 356, 358
0106590 331
0106592 327
0106597 326
0106624 242
0106630 330
0106635 329
0106646 248
0106671 100
0106701 ..... 429, 431, 433
0106702 433
0106705 ..... 429, 431, 433
0106707 433
0106717 ..... 431, 433
0106739 433

0106745 433
0106747 ..... 429, 433
0106749 ..... 429, 433
0106750 ..... 431, 433
0106751 ..... 429, 431, 433
0106752 ..... 429, 431, 433
0106753 ..... 429, 431, 433
0106755 ..... 431, 433
0106756 ..... 431, 433
0106758 ..... 429, 433
0106760 ..... 429, 433
0106763 431
0106769 431
0106770 431
0106773 431
0106775 431
0106776 431
0106777 431
0106781 431
0106784 431
0106788 431
0106790 431
0106792 ..... 429, 433
0106793 429
0106794 ..... 429, 433
0106795 ..... 429, 433
0106796 429
0107052 429
0107104 365
0107577 ..... 142, 148, 150
0107596 142
0107616 ..... 144, 147
0108006 330
0108010 330
0108011 326
0108012 ..... 316, 330
0108115 ..... 316, 326
0108504 290
0108550 356
0108552 ..... 352, 355, 356, 358
0108555 ..... 353, 357
0108576 ..... 238, 331
0110015 ..... 429, 431
0110063 271
0110082 250
0110112 242
0110113 ..... 228, 243
0110114 ..... 228, 243
0110115 ..... 228, 243
0110116 ..... 228, 243
0110122 239
0110123 239
0110124 242
0110131 282
0110133 225
0110150 226
0110172 242
0110180 ..... 429, 433
0110182 ..... 429, 433
0110184 ..... 247, 429, 433
0110194 227
0110195 239
0110205 ..... 226, 241
0110208 239
0110209 240
0110213 240
0110233 226
0110234 226
0110236 267
0110237 267
0110238 267
0110239 266
0110240 266
0110241 ..... 266, 267
0110242 ..... 266, 267
0110243 266
0110244 266
0110245 266
0110246 266
0110247 266
0110248 266
0110249 267
0110250 243
0110251 243
0110254 244
0110255 ..... 227, 244
0110256 244
0110257 244
0110258 244
0110259 244
0110261 448
0110262 245
0110264 245
0110265 245
0115089 303
0115092 302
0115155 270
0115161 269
0115162 269
0115163 269
0115166 ..... 202, 203, 204, 205, 206, 207, 208, 209, 210, 212, 213
0115184 285
0115211 285
0115212 284
0115236 ..... 216, 218, 219
0115283 166
0115324R 395, 403
0115325 411
0115325R 407
0115328 480
0115705 372

0115802 258
0115851 232
0120009 264
0120062 264
0120063 266
0120201 ..... 229, 231
0120251 ..... 415, 419
0120291 81
0121415 356
0123001 227
0123023 370
0125025 ..... 103, 139
0125026 ..... 103, 139
0125027 139
0125028 139
0125057 139
0125058 ..... 133, 135, 137
0125059 ..... 133, 135, 137, 139
0125060 ..... 133, 135, 137, 139
0125065 ..... 118, 133, 137, 139
0125066 ..... 133, 135, 137, 139
0125070 133
0125071 139
0125072 139
0125605 135
0126013 327
0126091 326
0126137 ..... 242, 316
0126222 ..... 388, 390, 391
0126223 ..... 388, 390, 391
0126235 ..... 388, 390, 391
0126240 ..... 388, 390, 391
0126551 328
0127053 372
0127501 371
0127502 370
0127503 371
0127504 370
0127505 371
0127510 370
0128011 246
0128039 262
0128042 246
0128066 263
0128113 271
0128409 ..... 226, 248
0128725 250
0128730 240
0128775 261
0128776 261
0128777 265
0128778 265
0128779 264
0128781 266
0128782 266
0128796 264
0128797 262
0128821 261
0130256 450
0131830 288
0131831 288
0131832 287
0131833 287
0131834 287
0150050 154
0150065 449
0150204 172
0150205 172
0150215 178
0150225 179
0150245 173
0150260 40
0150270 40
0150320 195
0150359 ..... 160, 437
0150360 92
0150365 93
0150368 454
0150425 ..... 202, 208, 212
0150440 ..... 202, 208, 212
0150441 ..... 202, 208
0150442 ..... 202, 208, 212
0150443 ..... 202, 208, 212
0150444 ..... 202, 208, 212
0150550 20
0150766 452
0150769 284
0150830 284
0150831 286
0150832 287
0150833 287
0150860 92
0150870 93
0150880 92
0150904 472
0150905 471
0150906 472
0150907 471
0150909 473
0150914 473
0150919 474
0150920 474
0150922 472
0150924 475
0150925 452
0150991 474
0150992 475
0151109 458
0151236 448
0151256 451
0151257 451
0151259 451

0151260 41
0151277 ..... 190, 195, 197
0151300 195
0151303 196
0151310 ..... 190, 194, 197
0151560 19
0151600 20
0151650 ..... 10, 21, 24
0151660 22
0151665 21
0151690 22
0151763 ..... 92, 95
0151765 ..... 91, 92, 94, 95
0151770 ..... 91, 92, 94, 95
0151775 ..... 91, 92, 94
0151850 94
0151866 459
0152000 80
0152001 80
0152005 82
0152006 82
0152024 185
0152157 ..... 185, 186
0152160 185
0152161 ..... 185, 186
0152163 ..... 185, 186
0152164 ..... 185, 186
0152166 ..... 185, 186
0152180 185
0152185 186
0152255 41
0152290 194
0152294 ..... 295, 303
0152305 195
0152375 177
0152445 177
0152600 177
0152605 180
0152625 19
0152630 ..... 10, 20, 23
0152635 ..... 190, 195, 197
0152641 ..... 190, 195
0152645 19
0152716 79
0152717 ..... 83, 449
0152736 79
0152738 79
0152749 80
0152762 456
0152774 284
0152838 79
0152927 92
0152930 ..... 436, 448
0153218 460
0153220 460
0153289 173
0153295 194
0153302 175
0153306 450
0153320 174
0153330 ..... 64, 66
0153338 174
0153359 174
0153365 172
0153370 42
0153373 451
0153525 ..... 159, 179
0153535 ..... 64, 66
0153547 172
0153548 180
0153549 173
0153574 ..... 159, 179
0153576 173
0153577 173
0153585 19
0153605 ..... 42, 58
0153635 173
0153636 173
0153784 302
0153840 92
0153865 92
0153880 251
0153902 224
0153914 251
0153927 92
0153951 224
0153952 224
0155033 455
0155130 43
0155140 43
0157440 208
0160330 179
0160550 20
0160600 21
0181341 196
0182107 304
0182109 307
0182112 309
0182113 302
0182114 306
0182175 174
0182181 174
0182229 172
0182239 450
0182240 174
0182245 174
0182250 44
0182260 44
0182262 45
0182263 45
0182340 66
0182410 177

0182411 173
0182550 19
0182615 436
0182720 92
0182750 ..... 92, 94
0182760 ..... 91, 92, 94, 95
0182768 287
0182770 92
0182840 453
0182874 453
0182886 328
0183064 308
0183066 308
0183068 308
0183096 308
0183097 308
0183098 308
0183111 ..... 294, 295, 303
0183112 ..... 294, 295, 303
0183113 ..... 133, 135, 137, 139, 301
0183114 301
0183129 302
0183146 304
0183173 118
0183484 451
0183488 ..... 299, 313
0183710 80
0183715 80
0183717 80
0183718 80
0183738 450
0183739 450
0183740 449
0183751 81
0183752 81
0183800 447
0183808 304
0183825 307
0183845 447
0183878 ..... 185, 186
0183925 329
0184287 302
0184299 303
0184444 305
0184755 304
0184756 309
0184770 449
0184932 452
0184933 452
0184935 452
0187051 309
0187055 305
0188011 ..... 133, 135, 137, 139
0188012 ..... 133, 135, 137, 139
0188013 ..... 133, 135, 137
0188014 ..... 133, 135, 137, 139
0188019 ..... 133, 135, 137, 139
0188021 ..... 133, 135, 137, 139
0188024 ..... 133, 135, 137, 139
0188026 ..... 133, 135, 137, 139
0188032 118
0188051 ..... 133, 135, 137, 139
0188053 ..... 133, 135, 137, 139
0188054 ..... 133, 135, 137, 139
0188055 ..... 133, 135, 137, 139
0188057 ..... 133, 135, 137, 139
0188150 106
0188176 111
0188206 ..... 102, 103
0188209 109
0188210 ..... 114, 116
0189001 459
0189036 307
0189053 ..... 437, 456
0189054 ..... 437, 456
0189058 ..... 160, 437
0189069 304
0189072 309
0189076 305
0189098 245
0189099 245
0189118 247
0189119 248
0189120 246
0189123 247
0189124 247
0189126 252
0189136 241
0189185 103
0189186 103
0189187 ..... 133, 135, 137
0189188 ..... 133, 135, 137
0189189 ..... 133, 135, 137
0189192 ..... 133, 135, 137, 139
0189193 ..... 133, 135, 137
0189204 ..... 118, 133, 135, 137
0189205 ..... 118, 133, 135, 137
0189244 238
0189504 249
0189933 ..... 133, 135, 137, 139
0201600 ..... 279, 289
0214652 226
0215203 481
0215217 481
0215250 ..... 202, 208, 212
0215252 ..... 294, 295
0215258 ..... 202, 208
0215301 ..... 395, 399, 403
0215302 ..... 395, 399, 403, 409, 413
0215303 ..... 395, 399, 403, 409
0215304 ..... 395, 399, 403
0215305 399

0215306 ..... 395, 399
0215307 ..... 395, 399
0215308 ..... 395, 399
0215314 ..... 395, 399, 403, 409, 413
0215315 ..... 395, 399, 403, 409, 413
0215317 ..... 395, 399, 403, 409, 413
0215319 ..... 395, 399, 403, 409, 413
0215320 ..... 395, 399, 403, 409, 413
0215321 395
0215326 ..... 395, 399, 407
0215327 ..... 407, 411
0215331 395
0215332 ..... 409, 413
0215334 ..... 409, 413
0215335 ..... 409, 413
0215338 ..... 409, 413
0215339 ..... 395, 399, 403, 409, 413
0215346 ..... 407, 411
0215350 ..... 407, 411
0215352 411
0215356 407
0215357 407
0215358 407
0215362 ..... 407, 411
0215363 ..... 407, 411
0215364 ..... 407, 411
0215365 ..... 407, 411
0215366 ..... 407, 411
0215367 ..... 407, 411
0215368 ..... 407, 411
0215369 ..... 407, 411
0215370 ..... 407, 411
0215390 ..... 403, 409, 413
0215393 ..... 407, 411
0215397 ..... 395, 399, 403, 407, 411
0215401 ..... 395, 399, 403, 407, 411
0215402 ..... 395, 399, 403, 407, 411
0215403 397
0215405 ..... 397, 401, 405
0215407 ..... 397, 401, 405
0215408 397
0215409 ..... 397, 401, 405
0215412 ..... 395, 399, 403
0215413 395
0215414 ..... 395, 399, 403
0215420 395
0215421 ..... 395, 399, 409
0215422 ..... 395, 399, 403, 409, 413
0215423 ..... 395, 399, 403, 409, 413
0215424 ..... 395, 399, 407, 411
0215465 ..... 397, 401
0215467 397
0215476 ..... 407, 411
0215477 ..... 397, 401, 403
0215478 ..... 397, 401, 403, 409, 413
0215485 ..... 395, 399, 403
0215493 ..... 403, 413
0215494 ..... 399, 403, 409, 413
0215495 ..... 399, 409, 413
0215498 405
0215499 403
0215556 ..... 407, 411
0215557 ..... 407, 411
0215559 411
0215561 ..... 403, 409, 413
0215563 ..... 403, 411
0215565 ..... 395, 399, 403, 409, 413
0215566 ..... 409, 413
0215568 ..... 403, 413
0215605 395
0215800 ..... 399, 403
0215805 258
0215806 258
0215807 258
0215808 258
0215809 258
0215810 258
0215811 258
0215812 258
0215813 258
0215814 258
0215815 259
0215816 259
0215817 259
0215818 259
0215819 259
0215820 259
0215821 259
0215822 259
0215823 259
0215824 259
0215825 259
0215826 259
0215827 259
0215828 259
0215829 259
0215830 260
0215833 260
0240626 460
0240627 460
0250100 31
0250200 11
0250230 11
0250330 11
0500010 467
0500024 249
0500025 467
0500040 468
0500314 387
0500403 457
0500405 473
0500407 456

0500420 452
0500421 448
0500423 449
0500435 455
0500440 455
0500442 455
0500448 457
0500625 466
0500630 466
0500635 467
0500640 467
0500665 454
0500670 454
0605602 460
0620007 255
1000125 363
1000126 363
1100322 262
1100346 459
1100490 ..... 301, 307
1100713 266
1100948 92
1100961 265
1101005 105
1101360 153
1101361 153
1101363 153
1101462 307
1101754 264
1102207 153
1102208 154
1102875 247
1102916 249
1102919 26
1102920 26
1103346 262
1103574 176
1103579 247
1103582 248
1103584 249
1103586 252
1103591 252
1103862 176
1103987 177
1103988 176
1103991 269
1104299 ..... 294, 304
1104300 306
1104484 264
1104517 261
1104548 159
1104551 ..... 159, 175
1104655 175
1104668 ..... 159, 175
1104939 85
1105072 373
1105196 468
1105284 306
1105287 ..... 158, 176
1105288 ..... 158, 176
1105289 ..... 158, 175
1105290 ..... 158, 175
1105440 262
1105441 262
1105442 261
1105443 261
1105444 262
1105445 262
1105446 262
1105447 261
1105453 266
1105498 46
1105770 159
1106794 160
1106937 ..... 294, 301, 305
1106938 269
1106939 270
1106940 270
1107192 458
1107228 106
1107264 266
1107501 268
1107737 264
1108332 262
1108333 263
1108359 441
1109057 180
1110095 83
1110111 86
1110134 465
1110147 85
1110159 464
1110167 86
1110168 ..... 86, 464
1110170 86
1110171 86
1110175 464
1110191 184
1110201 84
1110209 85
1110214 82
1110215 85
1110222 25
1110223 ..... 16, 18
1110236 465
1110242 25
1110246 197
1110249 184
1110255 24
1110258 24
1110259 24
1110276 85

1110277 198
1110282 464
1110283 ..... 65, 68
1110285 68
1110288 ..... 207, 213
1110304 85
1110315 96
1110317 24
1110318 22
1110324 95
1110325 60
1110328 59
1110332 24
1110345 95
1110348 95
1110350 95
1110352 95
1110353 95
1110357 96
1110358 96
1110359 96
1110362 95
1110367 50
1110368 96
1110370 96
1110442 255
1110567 369
1110683 313
1110685 253
1110708 82
1110764 256
1110767 256
1110787 370
1110883 341
1110937 17
1111033 18
1111049 220
1111074 275
1111148 17
1111197 255
1111232 183
1111247 465
1111261 255
1111342 256
1111397 413
1111433 255
1111500 84
1111551 341
1111583 357
1111588 197
1111609 250
1111629 465
1111634 359
1111759 67
1111826 256
1111835 359
1111860 340
1111862 340
1111863 340
1111864 341
1111865 340
1111866 341
1111970 359
1112087 366
1112088 366
1112155 368
1112200 359
1112325 96
1112421 104
1112623 333
1112627 254
1112628 366
1112640 310
1112651 462
1112665 367
1112667 310
1112682 182
1112711 357
1112718 461
1112723 313
1112726 310
1112731 461
1112747 67
1112748 182
1112753 ..... 365, 367
1112756 219
1112766 181
1112769 332
1112774 310
1112777 83
1112779 463
1112783 253
1112785 181
1112792 150
1112808 83
1112842 82
1112846 148
1112849 181
1112853 333
1112855 219
1112863 311
1112882 463
1112884 253
1112900 83
1112903 333
1112905 219
1112912 461
1112925 462
1112968 311
1112969 312
1112973 332
1112974 332

1112994 149
1113004 253
1113008 464
1113012 67
1113015 312
1113016 196
1113036 463
1113038 462
1113040 ..... 182, 311
1113047 464
1113057 149
1113058 149
1113062 310
1113063 148
1113067 312
1113068 288
1113071 462
1113073 22
1113095 53
1113096 149
1113097 53
1113099 197
1113100 67
1113161 461
1113162 461
1113177 83
1113194 49
1113230 18
1113255 460
1113268 333
1113276 196
1113288 461
1113289 254
1113467 447
1113473 48
1113511 48
1113642 84
1113674 462
1113814 463
1113910 94
1113920 15
1113931 94
1113934 82
1113965 16
1113977 16
1113979 16
1114066 357
1114072 23
1114080 441
1114094 15
1114096 15
1114229 465
1114241 52
1114386 211
1114395 256
1114460 181
1114465 464
1114469 463
1114481 50
1114482 54
1114514 94
1114515 94
1114516 462
1114517 51
1114544 182
1114550 54
1114551 55
1114556 181
1114625 51
1114626 55
1114627 56
1114628 57
1114630 57
1114632 58
1114633 56
1114634 94
1114638 94
1114641 94
1114644 94
1114649 94
1114685 94
1130037 271
1130106 46
1131275 469
1131280 469
1131453 115
1131485 262
1131486 263
1131487 262
1131488 262
1131489 263
1131490 262
1131492 262
1131493 263
1131494 262
1131495 263
1131497 262
1131498 263
1131499 262
1131500 263
1131501 263
1131504 266
1131507 263
1131508 262
1131789 470
1131794 470
1131888 225
1131892 245
1131893 246
1131894 224
1131895 225
1131896 225

1131897 225
1132125 470
1132220 224
1132222 224
1132298 270
1132352 252
1132523 310
1133813 249
1133892 481
1133937 276
1133970 109
1134005 90
1134006 90
1134007 90
1134037 274
1134039 275
1134133 274
1134134 274
1134189 111
1134193 352
1134194 352
1134195 352
1134197 274
1134202 274
1134319 110
1134405 387
1137247 312
1137266 72
1137282 286
1137461 463
1137466 268
1137467 268
1137468 268
1137469 268
1137471 268
1137472 269
1137479 270
1137481 270
1137601 72
1137691 312
1138064 332
1138122 283
1138152 251
1138153 251
1138154 251
1138940 328
1138978 107
1138990 108
1138994 107
1139086 285
1139095 ..... 388, 390, 391
1139224 332
1139326 331
1139350 470
1139351 471
1139354 471
1139838 ..... 142, 147, 150
1139840 147
1139943 181
1139962 468
1140069 311
1140231 309
1140308 ..... 133, 135, 137
1140415 461
1140416 461
1140420 289
1140521 11
1140522 11
1140523 ..... 16, 18
1140768 389
1140769 251
1140780 ..... 216, 218, 219
1140791 261
1140851 172
1141081 149
1142326 216
1142686 246
1142706 73
1142776 283
1142833 331
1142836 468
1142957 106
1143217 436
1143219 436
1143239 276
1143261 275
1143287 72
1143445 463
1143736 72
1143741 275
1143742 275
1143743 275
1143744 275
1143745 275
1143746 275
1143994 311
1144206 252
1144332 365
1144608 182
1144713 311
1144728 459
1145003 468
1145049 389
1145139 246
1145140 248
1145141 248
1145694 125
1145695 ..... 123, 125
1145714 252
1145715 252
1145717 252
1146230 72

1146232 72
1146233 72
1146363 ..... 142, 147
1146364 147
1146518 253
1146567 453
1146598 110
1146611 352
1146614 90
1146730 265
1146731 265
1146732 265
1146733 265
1147503 80
1147505 80
1147507 ..... 80, 81
1147509 80
1147511 ..... 80, 81
1147513 ..... 80, 81
1147810 331
1148250 458
1148251 458
1148594 373
1148595 373
1148596 373
1148597 374
1148598 374
1148599 374
1148602 374
1148617 374
1148618 374
1148627 374
1148628 374
1148644 374
1148645 374
1148646 374
1148647 374
1148652 374
1148653 374
1148655 374
1148656 374
1148658 374
1148660 374
1148661 374
1148662 374
1148663 374
1148665 375
1148667 375
1148668 375
1148670 375
1148673 375
1148674 375
1148700 375
1148754 376
1148756 376
1148757 376
1148758 376
1148759 376
1148761 376
1148762 376
1148763 376
1148765 376
1148767 376
1148769 376
1148770 376
1148772 376
1148775 376
1148776 376
1148777 376
1148778 376
1148779 376
1148780 376
1148781 376
1148782 376
1148783 376
1148784 376
1148785 376
1148786 376
1148787 376
1148788 376
1148789 376
1148790 376
1148791 376
1148792 376
1148793 376
1148794 376
1148795 376
1148796 376
1148797 376
1148798 376
1148799 376
1148800 376
1148801 376
1148802 376
1148803 376
1148804 376
1148805 376
1148806 376
1148807 376
1148808 376
1148809 376
1148814 376
1148815 376
1148816 376
1148817 376
1148818 376
1148819 376
1148821 376
1148822 376
1148823 376
1148824 376
1148825 376

1148826 376
1148827 376
1148828 376
1148829 376
1148830 376
1148831 376
1148832 376
1148833 376
1148834 376
1148835 376
1148836 376
1148837 376
1148838 376
1148839 376
1148840 376
1148841 376
1148842 376
1148843 377
1148844 377
1148845 377
1148846 377
1148847 377
1148848 377
1148849 377
1148850 377
1148851 377
1148852 377
1148853 377
1148854 377
1148855 377
1148856 377
1148857 377
1148858 377
1148878 377
1148879 377
1148880 377
1148881 377
1148882 377
1148883 377
1148884 377
1148885 377
1148886 377
1148887 377
1148888 377
1148889 377
1148890 377
1148891 377
1148892 377
1148893 377
1148894 377
1148895 377
1148896 377
1148897 377
1148898 377
1148899 377
1148900 377
1148901 377
1148902 377
1148903 377
1148904 377
1148905 377
1148906 377
1148909 377
1148911 377
1148912 377
1148917 377
1148919 377
1148920 377
1148922 377
1148923 377
1148924 377
1148925 377
1148926 377
1148927 377
1148928 377
1148929 377
1148930 377
1148931 377
1148932 377
1148933 377
1148934 377
1148935 377
1148936 378
1148937 378
1148938 378
1148939 378
1148940 378
1148942 378
1148943 378
1148944 378
1148945 378
1148946 378
1148948 378
1148949 378
1148950 378
1148951 378
1148952 378
1148953 378
1148954 378
1148955 378
1148956 378
1148957 378
1148958 378
1148959 378
1148960 378
1148961 378
1148962 378
1148963 378
1148964 378
1148965 378
1148966 378
1148967 378

1148968 378
1148969 378
1148970 378
1148971 378
1148972 378
1148973 378
1148975 378
1148976 378
1148977 378
1148978 378
1148979 378
1148980 378
1148981 378
1148982 378
1155959 248
1155960 248
1156444 441
1156449 441
1164989 81
1165475 ..... 407, 411
1165477 ..... 407, 411
1165478 ..... 407, 411
1165479 411
1165882 380
1165901 249
1166275 ..... 227, 241
1166369 252
1166506 ..... 203, 204, 206
1166771 211
1166772 211
1167415 218
1167416 218
1167479 367
1167480 367
1167481 367
1167482 367
1167483 367
1167484 367
1167485 367
1167488 365
1167506 365
1167542 363
1167545 362
1167546 362
1167549 362
1168076 290
1168120 327
1168121 328
1168391 329
1168393 329
1168394 329
1168396 327
1168636 ..... 165, 299
1168923 ..... 133, 135, 137, 139
1169354 160
1169355 160
1169356 160
1170169 ..... 161, 179
1170170 ..... 161, 179
1170292 439
1170859 309
1170860 309
1171734 261
1173734 332
1179550 47
1179851 274
1180001 47
1180596 389
1181101 251
1181958 290
1182048 290
1182049 290
1182050 290
1182051 290
1182192 459
1182359 265
1182512 26
1182685 263
1182687 264
1182820 261
1182821 261
1182824 261
1182825 261
1182847 261
1182848 261
1182859 261
1182866 211
1183131 264
1183133 264
1183135 264
1183137 264
1188080 262
1221567 454
1221680 ..... 137, 139
1221682 ..... 133, 135, 137, 139
1221683 ..... 133, 135, 137, 139
1221713 261
1221714 ..... 133, 135, 137, 139
1221715 ..... 133, 135, 137
1221722 135
1225135 454
1225256 21
1225711 263
1225712 263
1225713 263
1225718 263
1225723 263
1225725 263
1225726 263
1225729 263
1225766 263
1225768 263

1225769 263
1225770 263
1225772 263
1225773 263
1225774 264
1225775 264
1225776 264
1225785 262
1225794 261
1225795 266
1226294 104
1226344 460
1226408 436
1226430 274
1226472 216
1227885 256
1227959 180
1228002 25
1228075 147
1228876 469
1230551 105
1230579 291
1232219 470
1233060 389
1233392 112
1233393 115
1233686 ..... 104, 105
1234334 26
1234335 26
1235060 81
1235112 90
1235162 436
1235208 271
1235213 271
1235215 271
1235298 ..... 103, 104
1235431 387
1235987 25
1236356 ..... 316, 330
1236358 262
1236359 262
1236804 482
1237884 271
1238010 160
1238037 160
1238071 469
1238300 451
1238612 251
1238696 104
1240470 ..... 185, 186
1240516 271
1240517 271
1241076 470
1251238 153
1251240 154
1252976 96
1253078 20
1253793 112
1254722 125
1254750 105
1254751 104
1255479 357
1255489 325
1255491 324
1255496 235
1255497 235
1255498 236
1255499 236
1255534 217
1255549 193
1255562 444
1255564 444
1255568 300
1255575 445
1255585 301
1255587 442
1255592 217
1255593 146
1255594 146
1255599 170
1255609 445
1255614 235
1255616 194
1255630 171
1255634 324
1255662 171
1255699 300
1255700 301
1255763 236
1255771 446
1255772 281
1255773 194
1255783 18
1255816 237
1255817 91
1255818 445
1255824 167
1255830 193
1255833 271
1255835 281
1255838 18
1255843 78
1255844 236
1255858 78
1255863 237
1255871 78
1255872 78
1255876 237
1255877 65
1255884 281
1255894 167
1255899 167

1256027 446
1256029 91
1256030 91
1256031 91
1256032 146
1256036 445
1256040 38
1256046 146
1256048 168
1256050 ..... 38, 39
1256054 167
1256067 281
1256091 366
1257046 469
1257136 ..... 388, 390, 391
1260628 417
1261126 366
1261528 481
1261632 482
1262205 389
1262207 381
1262879 381
1262909 253
1263132 271
1263628 125
1263629 125
1263841 457
1268278 105
1269277 459
1269278 458
1270111 178
1270125 178
1270131 180
1270132 ..... 178, 180
1270138 178
1270158 ..... 90, 93
1270164 ..... 93, 177
1270312 180
1270773 469
1271063 176
1271065 176
1272387 123
1272388 125
1272486 ..... 129, 131
1272487 131
1272488 131
1272489 ..... 129, 131
1272490 ..... 129, 131
1272491 ..... 129, 131
1272492 ..... 129, 131
1272493 ..... 129, 131
1272494 ..... 127, 131
1272497 129
1272498 129
1272499 ..... 127, 129
1272500 129
1272502 129
1272503 127
1272504 129
1272505 ..... 127, 129
1272506 ..... 127, 129
1272507 ..... 127, 129
1272508 ..... 127, 129
1272516 129
1272522 127
1272523 127
1272524 127
1272525 127
1272526 127
1272527 127
1272528 127
1272530 127
1272531 127
1272532 127
1272533 127
1272534 127
1272535 127
1272536 127
1272537 127
1272540 127
1272541 127
1272542 127
1272543 127
1272838 127
1272839 127
1274576 ..... 388, 390, 391
1274577 ..... 388, 390, 391
1275112 ..... 123, 125
1275113 ..... 123, 125
1275114 125
1275115 ..... 123, 125
1275117 125
1275118 125
1275119 ..... 118, 125
1275120 ..... 118, 125
1275128 125
1275129 125
1275173 125
1275175 125
1275258 250
1300198 295
1319670 459
1320276 105
1321563 79
1321899 ..... 436, 455
1321927 443
1323017 237
1323018 237
1323019 236
1323540 236
1324337 30
1325302 ..... 352, 354, 355, 358

1326075 91
1326433 83
1326494 83
1326498 183
1326708 83
1326713 83
1326747 183
1326784 182
1327133 68
1327139 90
1327460 66
1327681 117
1327733 158
1327734 158
1327736 158
1327737 158
1327741 76
1327742 76
1327746 76
1327748 76
1327802 168
1327803 168
1327804 168
1327805 168
1327806 168
1327808 169
1327818 169
1327824 169
1327825 169
1327826 169
1327828 169
1327830 170
1327831 170
1327833 170
1328015 77
1328020 77
1328077 77
1328081 77
1328086 77
1328090 76
1328091 76
1328777 77
1328778 318
1328799 77
1329017 64
1329026 77
1329073 217
1329109 73
1329112 73
1329113 73
1329114 73
1329116 73
1329120 73
1329121 73
1329126 227
1329189 254
1329200 59
1329279 78
1329280 77
1329314 78
1329456 161
1329467 235
1329520 145
1329557 17
1329558 ..... 320, 334, 338, 347, 349
1329559 334
1329560 ..... 334, 338
1329561 ..... 335, 339
1329570 ..... 319, 334, 339
1329571 335
1329572 335
1329573 ..... 335, 339
1329574 ..... 323, 335, 337
1329575 336
1329576 333
1329577 336
1329578 335
1329579 336
1329580 337
1329581 337
1329582 337
1329601 337
1329602 338
1329616 339
1329618 340
1329619 336
1329620 338
1329621 339
1329623 339
1329624 ..... 322, 340
1329625 339
1329635 338
1329640 334
1329642 336
1329643 336
1329645 337
1329646 ..... 319, 347, 349
1329647 319
1329649 ..... 319, 347, 349
1329651 319
1329653 ..... 320, 347, 349
1329654 ..... 320, 347
1329656 320
1329715 161
1329716 161
1329717 321
1329718 ..... 321, 322, 347, 349
1329719 321
1329720 321
1329722 ..... 323, 347
1329912 123
1330105 161

1330106 161
1330115 91
1330116 91
1330118 91
1330120 91
1330121 91
1330124 91
1330126 91
1330127 91
1330236 17
1330302 ..... 123, 438
1330303 ..... 123, 438
1330308 445
1330309 447
1330310 442
1330826 217
1330827 217
1330849 17
1330859 ..... 165, 441
1330918 ..... 165, 440
1331045 17
1331056 142
1331091 ..... 170, 443
1331092 ..... 170, 446
1331133 145
1331134 146
1331195 445
1331197 443
1331198 442
1331200 443
1331252 164
1331260 165
1331261 165
1331262 165
1331303 165
1331304 183
1331437 ..... 203, 438
1331443 183
1331666 183
1331669 444
1331670 443
1331671 444
1331672 444
1331673 444
1331674 443
1331862 322
1331863 320
1331864 322
1331866 322
1331868 321
1331869 320
1331871 323
1331872 323
1331873 323
1331995 37
1332053 171
1332054 171
1332105 438
1332108 162
1332158 203
1332159 203
1332160 161
1332195 167
1332288 355
1332314 152
1332365 ..... 333, 358
1332406 ..... 334, 358
1332449 64
1332460 ..... 166, 299
1332562 166
1332563 166
1332564 441
1333397 103
1333406 321
1333484 64
1333494 323
1333566 146
1333571 84
1333572 84
1333603 441
1333621 235
1333764 145
1334418 ..... 429, 433
1334461 166
1334469 166
1334479 442
1334501 95
1334536 235
1334800 95
1339446 442
1339447 442
1339724 381
1339868 324
1339870 324
1339871 324
1340549 ..... 249, 254
1341488 152
1341491 152
1341493 152
1341622 129
1358237 347
1358238 349
1358273 30
1358550 254
1358552 254
1358821 167
1359061 345
1359309 255
1359311 255
1360066 345
1360067 345
1360068 345

1360069 345
1360070 345
1360071 345
1360072 345
1361026 381
1362057 481
1362142 145
1363580 144
1365045 11
1366110 ..... 10, 12
1370765 190
1372878 74
1372879 ..... 74, 75, 76
1372880 ..... 74, 75, 76
1373255 74
1373256 74
1373324 75
1373355 74
1373356 74
1373403 75
1393824 75
1397061 ..... 395, 399, 403, 409, 413
1398503 281
1406668 239
1410444 316
1419184 ..... 148, 150
1419362 ..... 429, 431, 433
1426523 90
1426928 327
1427868 326
1429581 225
1430164 325
1430177 281
1430184 325
1430186 366
1430187 325
1430214 237
1430222 300
1430235 238
1430237 300
1430238 300
1430244 79
1430245 79
1430246 79
1430248 79
1430253 324
1430256 325
1459907 ..... 142, 145, 150
1467406 10
1467724 ..... 399, 403
1477122 ..... 403, 409, 413
1477199 ..... 202, 208, 212
1479601 467
1483222 365
1485066 82
1485081 82
1485259 82
1485267 82
1485269 82
1486307 ..... 10, 23
1498833 338
1503879 ..... 160, 171, 437
1507712 282
1508569 374
1508570 375
1508573 374
1508574 375
1508577 374
1508578 375
1508581 374
1508582 375
1508585 374
1508586 375
1508589 374
1508590 375
1508593 374
1508594 375
1508599 375
1508602 374
1508603 375
1508625 374
1508626 375
1508627 374
1508628 374
1508629 374
1508630 375
1509862 375
1509880 374
1509881 374
1509882 374
1509883 374
1509885 374
1509887 375
1509888 374
1509889 374
1509894 374
1509895 375
1509897 375
1509898 374
1509899 374
1509900 375
1509901 374
1509916 374
1509920 374
1510536 374
1510677 374
1510679 374
1510681 374
1510682 374
1510685 374
1510686 374
1510687 374

1510688 375
1510689 374
1510690 375
1510691 374
1510692 375
1510693 374
1510694 375
1510695 374
1510696 375
1510721 375
1510722 374
1513432 374
1514635 374
1514643 374
1514649 374
1514728 374
1516479 125
1517436 178
1519071 26
1520547 374
1527801 95
1527807 ..... 91, 94, 95
1527810 ..... 91, 92, 94, 95
1527819 93
1527822 93
1527825 93
1527843 93
1527845 93
1527846 93
1527849 93
1527852 93
1527859 93
1527881 93
1528483 374
1531581 454
1531582 453
1535563 125
1539595 242
1545561 82
1545564 82
1545565 82
1545581 82
1545583 82
1545621 82
1555147 ..... 166, 300
1570588 328
1572971 252
1580495 ..... 395, 399, 403
1586278 369
3167088 81
3324982 373
3402170 81
3477209 81
3477221 81
3525099 262
3525100 263
3535453 ..... 207, 213
13329624 322
ZF4108-302-139 ..... 401, 405

REX

30-06502-68 357
102-03800-01 218
102-04934-01 219
102-05250-10 357
102-07060-01 310
102-07874-01 182
102-08299-01 382
102-08529-01 382
102-08687-01 149
102-09003-01 460
102-09495-01 310
102-09520-01 311
102-10036-13 310
102-10072-01 382
102-10174-01 148
102-10234-02 312
102-10296-01 310
102-10300-01 312
102-11726-01 332
102-11795-01 365
102-12273-01 332
102-12273-04 332
102-12273-09 333
102-12273-19 332
102-12706-01 309
102-12709-01 311
102-12712-01 312
102-12727-01 311
102-12806-01 313
102-12860-01 312
102-13079-01 367
102-13080-01 ..... 365, 367
102-13082-01 366
102-13094-01 253
102-13259-01 333
102-13274 149
102-13441-10 103
102-30402-01 311
102-30413-01 311
102-30824-1 313
102-30839-01 83
102-30839-02 83
102-31157-02 463
102-31415 149
102-31466-01 462
102-31466-02 462
102-31474-01 83
102-31751-01 219
102-31786-01 333
102-31805-01 219
102-50001-03 219
102-50175-01 83

102-50175-02 83
102-50342-01 82
102-50362-01 149
113-20076-01 253
298-00133-53 357
298-00156-53 331
298-00179-53 331
298-00180-53 332
298-00181-53 332
298-00191-53 357
298-00400-02 ..... 182, 311
298-02086-56 288
298-02099-01 254
298-02104-56 331
298-02132-56 331
298-03041-01 150
298-06546-17 254
298-12033-17 253
298-13005-86 253
298-15062-17 253
298-50362-01 148
307-00045-47 149
307-03014-01 149
402-00718-02 196
502-00341-80 461
502-00341-81 461
502-04707-80 55
502-04707-81 56
502-04707-82 56
502-04707-83 57
502-05687-81 51
502-05687-82 52
502-05687-83 52
502-06060-80 48
502-06060-81 51
502-06371-80 463
502-06498-80 181
502-06593-80 67
502-06600-80 57
502-06600-81 58
502-06638-81 53
502-06657-80 23
502-06693-80 48
502-06825-80 49
502-06827-81 22
502-6883-80 196
502-06939-83 22
502-08479-80 312
502-08484-80 460
502-08616-80 463
502-9205-80 94
502-9205-81 94
502-9205-83 94
502-9206-80 94
502-9206-81 94
502-9207-80 94
502-9207-81 94
502-09290-80 67
502-09306-80 49
502-09394-80 50
502-09394-81 53
502-09398-81 181
502-9433-80 94
502-9433-81 94
502-09518-80 67
502-09523-80 82
502-09531-80 22
502-20002-80 463
502-20046-02 461
502-20138-80 23
502-20242-81 461
502-20259-80 462
502-20265-80 82
502-20265-81 82
502-20300-80 23
502-20509-80 182
502-20667-80 462
502-20667-81 462
502-20674-80 50
502-20674-81 54
502-20674-82 54
502-20674-83 54
502-20674-84 55
502-20730-80 464
502-20730-81 463
502-20742-80 181
502-20784-80 197
502-20805-81 182
502-20821-80 461
502-20915-80 181
502-20958-80 182
502-20972-80 461
502-20975-80 181
502-20980-80 464
502-20980-81 464
502-30111-80 312
502-30175-80 461
502-30175-81 461
502-30210-80 463
502-30309-80 181
502-30323-80 462
543-20047-80 67
602-00094-01 333
602-02212-01 288
7649 211
85632-1 219
202866 211
5050650 288
43822014 357
1020651001 211
1020651101 211
2980020002 211

2980020102 211
2980751134 211
3982000031 211
4020163102 211
5020239680 211
5020498580 211
6020502601 211

ROCKET

9873 198

SCHWING

389278 95
6112055 338
10007886 212
10195884 340
30340147 94
30342633 254
30350926 254
30356909 254
30361593 254
30369145 150
30386148 391
30386194 391
30386195 391
30386196 391
30386609 313
30386620 59
30386676 183
30389007 212
30389008 212
30389026 313
30389031 94
30389032 183
30389033 94
30389034 94
30389035 219
30389055 197
30389067 197
30389131 150
30389132 336
30389133 336
30389134 337
30389135 334
30389153 255
30389186 83
30389187 84
30389188 84
30389318 334
30389319 ..... 335, 339
30389337 338
30389339 103
30389358 339
30389376 336
30389383 212
30389428 391
30389437 94
30389446 313
30389469 ..... 334, 358
30389477 95
30389493 94
30389498 94
30389531 337
30389532 337
30389533 338
30389534 337
30389536 337
30389537 334
30389538 334
30389539 333
30389540 ..... 335, 337
30389541 ..... 335, 339
30389542 ..... 334, 338
30389543 339
30389544 340
30389545 339
30389546 338
30389547 336
30389549 336
30389550 335
30389575 335
30389578 335
30389665 183
30389666 183
30389757 182
30389765 183
30389839 313
30389877 391
30389882 391
30389884 84
30389885 84
30389911 83
30389912 83
30389913 83
30389914 83
30389925 ..... 333, 358
30389984 358
60104471 212
60306041 58
60306054 23
60306104 197
60306114 24
60306129 212
60306130 212
60306171 23
60306189 212
60306640 68
60306835 212
60306836 212
60306837 212
60306838 212

SMITH

0250CRA 96
380-43832000 197

1814CRA 96
1856CRA 96
5111LNT 86
6006 213
6007 213
6008 213
6009 213
22769 213
28522 465
28525 465
28852 213
29142B 213
32089 213
32123-00 213
32123SUB 213
33354-00 183
33359-000 68
33592 464
33593 465
55000-51 313
00104020 213
0116053 213
0125000 95
0250000 96
0385000 96
483600 289
780014 341
00944004 255
1200012 256
1200015 256
1520987 290
1570357 289
1573535 289
1814000 96
1856000 96
1857000 95
1987000 95
2550000 24
2551000 24
3257006 255
3366000 255
3589001 256
3589004 256
3590001 464
4381700 24
4381700P 24
6692000 358
6692002 359
8137000 366
8137000B 366
43619140 255
43666001 95
43666002 95
43666003 95
43666008 95
43666016 95
43666017 95
43666018 95
43666021 95
43668001 95
43668002 95
43668019 95
43668020 95
43682000 255
43766001 84
43766006 ..... 84, 85
43766008 86
43766009 ..... 86, 464
43766065 85
43766067 84
43766068 86
43766077 86
43767000 85
43767030 85
43809002 85
43811000 341
43816000 24
43832008 197
43897001 25
43940010 68
43940017 184
43940039 184
43940130 59
55000010 464
55000033 85
55000071 359
55000558 465
437877001 465
438580000 359
550000507 256
5500044004 340
5500044101 340
5500044103 340
5500044104 341
5500044105 340
5500044106 341
C342-0464 256
F4E050CC 359
HH-00356-140 213
MB-29372 220
MD-32037 60
XM-00071-000 220
YM-1024-000 25

TEREX

001524-15 123
001620 123
001764-1 123
003263 123
003267 123
003269 123
003274-1 123
003274-2 123

003349-1 123
003405-1 123
003942 123
4036 159
004070-1 123
004070-2 123
004291 123
004622-1 123
004622-2 123
006238 123
006942-1 123
006942-2 123
12675 90
12684 90
12691 90
12702 90
12709 90
13389 294
16616 436
23494 73
23495 73
23617 73
23820 73
24061 142
40113 294
40114 294
40116 294
40117 10
40130 10
40139 158
40150 295
40153 190
40166 190
40174 190
40188 437
40201 294
40285 437
40288 437
40324 158
40354 216
40355 64
40367 161
40423 142
40424 142
40426 437
40501 90
40523 190
40748 437
40749 10
40810 294
40830 202
40894 316
40909 436
40959 437
40972 316
41200 316
41345 142
41403 316
41424 436
41444 30
41580 10
41655 64
41978 438
41979 438

VENDOR

EATON

4620-044 363
4620-098 362
4620-147 362
4630-010 363
4631-010 363
4631-047 363
4631-054 363
5420-115 362
5420-125 362
5420-161 363
5420-162 363
5421-247 362
5421-248 362
5421-249 363
5421-250 363
5421-251 362
5421-252 362
5421-550 362
5421-551 362
5421-552 363
5421-553 363
5421-554 362
5421-555 362
5423-486 362
5423-551 362
5431-024 363
5431-085 363
6421-053 363
P4605 363

FIRESTONE

W01-358-6944 111
W01-358-7405 109
W01-358-7550 110
W01-358-7818 113
W01-358-9083 116
W01-358-9501 108
W01-455-6935 111
W01-455-7547 110
W01-455-7786 109
W01-675-8903 107
W01-675-9141 107
W01-W20-9370 108

GOODYEAR

1R12-388 108

HENDRICKSON

8AH490 125
001347 112
001524-15 125
001620 125
001682 125
002346-3 125
003263 125
003267 125
003405-1 125
004645 115
004828 117
005079 112
006307 125
006344 125
006347-1 125
006347-2 125
006639-1 125
006639-2 125
006645 125
006715 125
006766 125
B-14249 115
B-14487 ..... 114, 116
SA-1500-7 125

REYCO GRANNING

1014 113
1359 116

SUNDSTRAND

22-2052 364
23-2041 364
23-2084 364
23-2085 364
9510191 365
9510368-2001 364
9510368-2002 364
9800204 365
9800997 364
9801094 364

WATSON and CHALIN

1R12-066 116
3B14-359 113
3HB773 129
3HS768 129
8HR412 129
8HR413 129
33HB769 127
1600-02 127
1900 ..... 129, 131
11941 ..... 127, 129
12927-02 127
12931-01 127
12954 127
12972 ..... 127, 129
16000-02 129
16017 ..... 129, 131
16060 129
16061 ..... 127, 129
16064 127
17012 129
17815-10 127
17815-20 127
17869-01 127
17869-02 127
17870 127
18040 129
18080 127
18255-01 127
33820 ..... 127, 129
50000-11 129
50000-12 129
50133 129
50155 127
90313-03 127
90413-48 129
90517 127
90848 127
160047-04 127
920267-20 129
920397-10 127
920397-20 127
930187-04 127
950185-10 127
950185-20 127
980060 129
980120 127
1293101 131
5000011 131
5000012 131
9206710 131
9206720 131
93014112 ..... 129, 131
93014122 131
AS-0019 117
AS-0048 114
AS-0058 ..... 113, 129

WESTPORT

14390-0006 ..... 133, 135, 137
140330-0024 139
140330-0025 139
140330-0044 ..... 133, 135, 137
143621-0046 139
143621-0047 139
143621-0060 ..... 133, 135, 137
143621-0061 ..... 133, 135, 137
143622-0001 ..... 133, 135, 137, 139
143623-0001 ..... 133, 135, 137, 139
143624-0001 ..... 133, 135, 137, 139
143625-0004 ..... 133, 135, 137, 139
143640-0004 139
143640-0005 139
143640-0022 139

143640-0036 ..... 133, 135, 137
143660-0001 ..... 133, 135, 137, 139
143661-0008 ..... 133, 135, 137
143663-0001 ..... 133, 135, 137, 139
143664-0007 ..... 133, 135, 137
143686-0014 ..... 133, 135, 137, 139
143687-0193 139
143687-0194 139
143687-0195 ..... 133, 137
143687-0196 ..... 133, 137
143687-0276 135
143687-0277 135
143688-0019 ..... 133, 135, 137, 139
143689-0030 ..... 133, 135, 137, 139
143690-0006 139
143691-0002 ..... 133, 135, 137, 139
143691-0004 ..... 133, 135, 137, 139
143692-0159 133
143692-0178 ..... 137, 139
143692-0179 135
143692-0180 135
143698-0008 139
143699-0061 ..... 133, 135, 137, 139
143699-0062 ..... 133, 135, 137, 139
143699-0067 ..... 133, 135, 137, 139
143699-0109 ..... 133, 135, 137, 139
143699-0113 ..... 133, 135, 137, 139
143699-0115 ..... 133, 135, 137
143699-0149 ..... 133, 135, 137, 139
143699-0163 ..... 133, 135, 137
143699-0164 ..... 133, 135, 137
143699-0211 ..... 133, 135, 137, 139
143699-0103412 ..... 133, 135, 137, 139
143699-0108627 ..... 133, 135, 137
143699-0225861 ..... 133, 135, 137, 139
0143699-9424225 133
143699-9429093 ..... 133, 135, 137, 139
1430330-0043 ..... 133, 135, 137

ZF

0374-112-169 409
0621-610-066 411
0630-501-025 ..... 409, 413
0630-501-031 ..... 409, 413
0630-502-067 ..... 409, 413
0630-503-018 ..... 409, 413
0630-531-057 ..... 407, 411
0631-311-009 ..... 407, 411
0631-405-018 409
0632-610-066 407
0634-304-287 ..... 407, 411
0634-801-074 ..... 407, 411
0635-285-013 ..... 409, 413
0635-331-269 409
0635-332-196 409
0635-33124801 407
0636-015-120 ..... 407, 411
0636-100-824-01 407
0636-101-071 ..... 409, 413
0636-101-073 ..... 409, 413
0730-000-874 ..... 407, 411
0730-002-241 ..... 407, 411
0730-002-242 ..... 407, 411
0730-002-243 ..... 407, 411
0730-002-244 ..... 407, 411
0730-002-245 ..... 407, 411
0730-005-750 411
0730-005-751 411
0730-005-752 ..... 407, 411
0730-005-753 ..... 407, 411
0730-005-754 ..... 407, 411
0730-006-871 ..... 407, 411
0730-006-874 ..... 407, 411
0730-007-237 ..... 407, 411
0730-007-239 411
0730-007-697 411
0730-102-311 ..... 409, 413
0730-102-684 ..... 409, 413
0730-102-816 ..... 409, 413
0730-150-238 ..... 409, 413
0730-365-127 ..... 407, 411
0734-112-169 413
0735.301.585.000 ..... 395, 399, 403
0735-470-179 409
0737-502-084 ..... 409, 413
0737-502-128 ..... 407, 411
0750-116-137 ..... 409, 413
0750-116-188 407
0750.116.188.000 411
0750-116-322 413
0750-116-343 413
0750-117-015 395
0750-117-057 ..... 407, 411
0750-117-715 399
0750 117 715 01 407
0750-117-735 411
0750-119-092 ..... 409, 413
0750-119-092-01 413
4002-007-558 407
4002-302-021 407
4002-302-022 407
4002-302-023 407
4108-201-281 411
4108-202-049 407
4108-202-050 411
4108-203-149 ..... 409, 413
4108-203-154 ..... 407, 411
4108 203 173 395
4108-301-293 ..... 407, 411
4108-302-004 ..... 409, 413
4108-302-007 ..... 409, 413
4108-302-158 411
4108-302-199 ..... 409, 413

4108-303-034 ..... 407, 411
4108-303-160 ..... 407, 411
4108-303-213 409
4108-303-214 ..... 407, 411
4108-303-289 ..... 409, 413
4108-303-292 409
4108-303-296 ..... 409, 413
4108-303-298 413
4108-303-320 413
4108-303-321 413
4108-306-101 409
4108-306-102 ..... 409, 413
4108-306-171 413
4108-306-172 ..... 407, 411
4108-308-037 ..... 409, 413
4108-308-038 ..... 409, 413
4475-280-018 411
07356.330.284.01 411
36204 ..... 415, 419
157915 417
900598-2SAD 417
1030056 425
1030293 425
1030680 ..... 417, 421, 425
1030886 423
1030887 423
1031247 425
1031267 423
1031825 421
1031852 417
1031896 417
1032054 417
1032056 417
1032057 ..... 415, 419
1032059 ..... 415, 419
1032422 ..... 415, 419
1032505 419
1032507 421
1032508 421
1032509 421
1032522 419
1032523 415
1050177 ..... 415, 419
1050273 425
1050362 ..... 415, 419
1050448 421
1050601 423
1050602 423
1050786 423
1050982 ..... 417, 421
1051036 417
1051128 421
1051129 417
1051186 421
1170261 ..... 417, 421
1300047 423
1300189 423
1300190 423
1300191 423
1300192 423
1300193 423
1300194 423
1300195 423
1300300 423
1300301 423
1300431 419
1300489 ..... 415, 419
1300490 415
1300491 415
1300492 ..... 415, 419
1300493 421
1300494 ..... 415, 419
1300495 ..... 415, 419
1300496 ..... 415, 419
1300497 ..... 415, 419
1300578 419
1300579 421
1570052 423
1570464 423
1570526 ..... 417, 421
1573710 ..... 415, 419
1573971 421
1574915 421
1640320 ..... 415, 419
1670261 423
1670262 423
1670264 423
1670327 423
1670328 423
1670329 423
1670356 423
1670538 ..... 415, 419
1670539 ..... 415, 419
1670540 ..... 415, 419
1670547 415
1670548 415
1670549 ..... 417, 421
1670551 ..... 415, 419
1670553 ..... 415, 419
1670555 ..... 415, 419
1670556 ..... 415, 419
1670653 419
1670654 419
1690016 423
1690018 423
1690069 423
1690071 423
1690142 423
1690231 ..... 417, 421
1690250 425
1690411 423
1690412 423

1690413 423
1690415 423
1690438 423
1690439 423
1690440 423
1690503 425
1690740 ..... 415, 419
1690909 ..... 417, 421
1691021 421
1691022 421
1691023 421
1691024 421
1691025 421
4060034 ..... 415, 419
4060592 ..... 415, 419
4060593 ..... 415, 419
5006191 423
5060054 423
5060807 423
5060808 423
5061096 423
5061097 423
5061098 423
5061169 425
5061180 425
5061871 415
5062150 ..... 415, 419
5062153 ..... 415, 419
5062244 415
5062245 ..... 415, 419
5062246 415
5062247 ..... 415, 419
5062248 ..... 417, 421
5062249 ..... 417, 421
5062250 ..... 417, 421
5062251 ..... 417, 421
5062256 415
5062261 415
5062903 ..... 415, 419
5063003 419
5063004 419
5063006 419
5063007 419
5063022 419
5063026 419
5070696 ..... 417, 421, 425
410836102 399
0630000041 397
0630004189 ..... 395, 399, 403
0630501031 ..... 395, 399, 403
0630502039 ..... 397, 401, 405
0630502067 ..... 395, 399, 403
0630503018 ..... 395, 399, 403
0630531064 ..... 397, 401, 405
0631311009 ..... 397, 401, 403
0631405018 ..... 395, 399
0632610066 ..... 395, 399, 403
0634300610 ..... 397, 401, 405
0634304287 ..... 395, 399
0634801057 403
0635285013 ..... 395, 399, 403
0635331223 ..... 397, 401
0635331260 395
0635331269 ..... 395, 399
0635332196 ..... 395, 399
0636100824 395
0636101071 ..... 397, 401, 403
0636101073 ..... 397, 401, 403
0636108024 399
0730002171 411
0730003018 ..... 395, 399
0730003019 ..... 395, 399
0730100233 ..... 395, 399
0730100584 ..... 395, 399
0730102341 397
0730102644 ..... 395, 399, 403
0730102684 ..... 395, 399, 403
0730102816 ..... 395, 399, 403
0730106813 ..... 395, 399, 403
0730365058 ..... 397, 401
0730365127 403
0734307142 ..... 395, 399, 403
0737502084 ..... 395, 399, 403
0750116137 ..... 399, 403
0750116277 405
0750116322 403
0750116343 403
0750117735 403
0750119092 ..... 395, 399, 403
1408303212 395
4108201194 395
4108201199 395
4108201279 403
4108203152 399
4108203154 403
4108203173 ..... 399, 403
4108301293 ..... 395, 399, 403
4108301431 401
4108301450 405
4108302007 ..... 395, 399, 403
4108302062 ..... 395, 399, 403
4108302063 ..... 397, 401
4108302085 397
4108302088 395
4108302093 395
4108302139 ..... 401, 405
4108302166 399
4108302190 403
4108302192 ..... 399, 403
4108302199 403
4108303213 397
4108303219 395

4108303239 395
4108303283 ..... 399, 403
4108303285 399
4108303289 ..... 399, 403
4108303292 403
4108303296 ..... 399, 403
4108303298 403
4108303320 403
4108303929 399
4108306091 395
4108306101 ..... 395, 399
4108306102 ..... 395, 403
4108306146 395
4108306172 ..... 395, 399, 403
4475280018 403
073533028401 407
4108303214101 407
H-70-568-114 ..... 417, 421
P-5300BK 395
P-5300EX 395
P-5300SK 395
P-6300BK 399
P-6300EX 399
P-6300SK 399
P-7300BK 403
P-7300EX 403
P-7300SK 403
PK-6500BK 407
PK-6500EX 407
PK-6500SK 407
PK-7500BK 411
PK-7500EX 411
PK-7500SK 411

STREET SMART PARTS BY McNEILUS

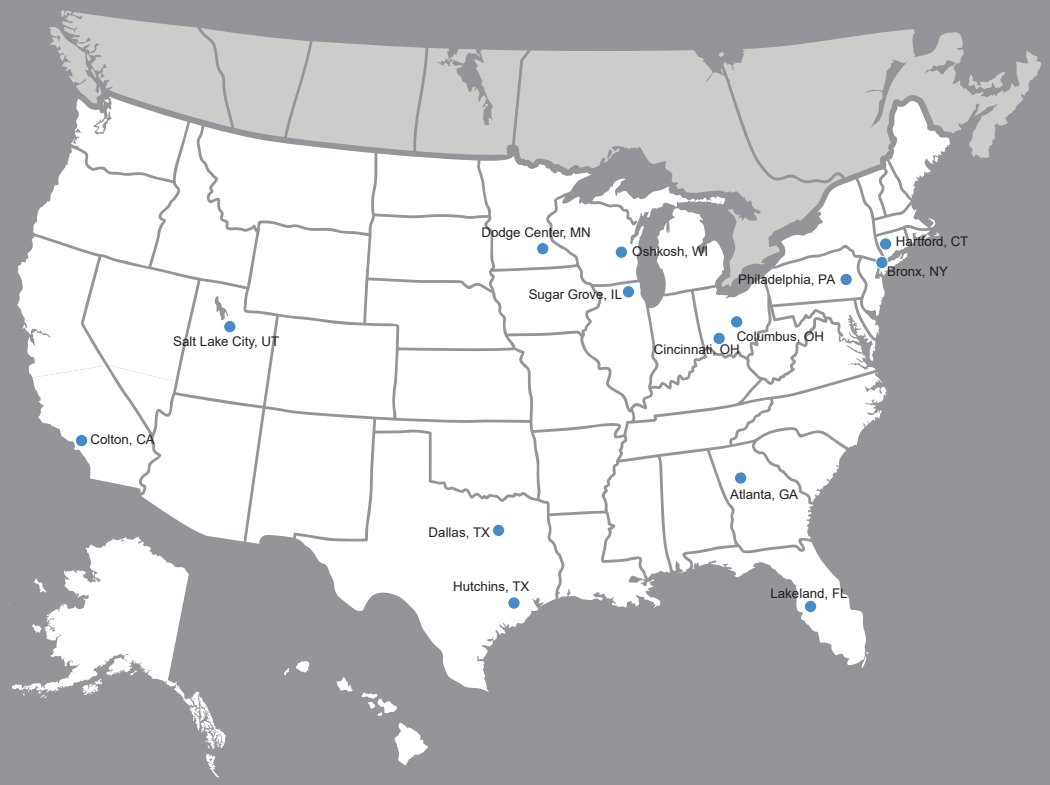

888.686.7278

www.streetsmartparts.com

ARIZONA	Mobile Technician
CALIFORNIA	P.O. Box 1588, 401 North Pepper, Colton, CA 95215
CALIFORNIA	Mobile Technician (Stockton)
COLORADO	Mobile Technician
CONNECTICUT	P.O. Box 1126, 35 Nicholson Rd, East Granby, CT 06026
FLORIDA	4950 S. Frontage Rd, Lakeland, FL 33815
FLORIDA	Mobile Technician (Pompano Beach)
GEORGIA	1 McNeilus Court, Villa Rica, GA 30180
ILLINOIS	490 Heartland Drive, Sugar Grove, IL 60554
LOUISIANA	Mobile Technician
MINNESOTA	524 County Road 34 East, Dodge Center, MN 55927
MISSOURI	Mobile Technician
NORTH CAROLINA	Mobile Technician
NEVADA	4140 Frehner Rd, Las Vegas, NV 89060
NEW YORK	1080 Leggett Ave, Bronx, NY 10474
OHIO	8997 Lesaint Drive, Fairfield, OH 45014
OHIO	P.O. Box 30777, 1130 Morrison Rd, Gahanna, OH 43230
PENNSYLVANIA	P.O. Box 219, 941 Hemlock Rd, Morgantown, PA 19543
TEXAS	P.O. Box 458, 1101 Interstate Hwy 45 South, Hutchins, TX 75141
TEXAS	1812 McCarty Street, Houston, TX 77229
UTAH	2221 South 3270 West, West Valley City, UT 84119
WASHINGTON	Mobile Technician
WISCONSIN	4325 South Washburn Street, Oshkosh, WI 54904

© 2015 McNeilus Truck and Manufacturing Inc. McNeilus, the McNeilus logo are registered trademarks and Street Smart Parts is a trademark of McNeilus Truck and Manufacturing Inc., Dodge Center, MN, USA. Oshkosh is a registered trademark of Oshkosh Corporation, Oshkosh, WI, USA. All other designated trademarks are the property of their respective owners.