002238.idw, 10/29/2014 1:47:47 PM, Fit to Page

## REVISION HISTORY

| ZONE | REV | DESCRIPTION | DATE | ECO | BY |
|---|---|---|---|---|---|
| -- | 3 | CREATED IDW, MADE HOLE SIZES STANDARD | 1/13/2012 | 11-0527 | SAM |

| | | | | |
|---|---|---|---|---|
| UNLESS OTHERWISE NOTED TOLERANCES ARE: X: +/-.1 XX: +/-.06 XXX: +/-.030 ANGULAR: +/-.5 TORQUE: +10%/-0% | DRAWN BY: MASSA | DATE: 1/13/2012 | DRAWING No. 002238 | REVISION 3 |
| | CHECKED BY: DANKOW | | | |
| | APPROVED BY: DANKOW | | ECO No. 11-0527 | SIZE D / SCALE .5=1 |
| | MODIFIED BY: | DATE: | TITLE BUSHING SADDLE PATTERN A | |

This print remains the property of Hendrickson. All information contained therein is confidential. It is loaned, subject to return on demand and on the expressed condition it may not be copied or used for any other purpose than for which it was loaned.

DIMENSIONS ADHERE TO ANSI Y14.5M-1982 | WELDS CONFORM TO AWS D1.1 | PAGE 1 OF 1

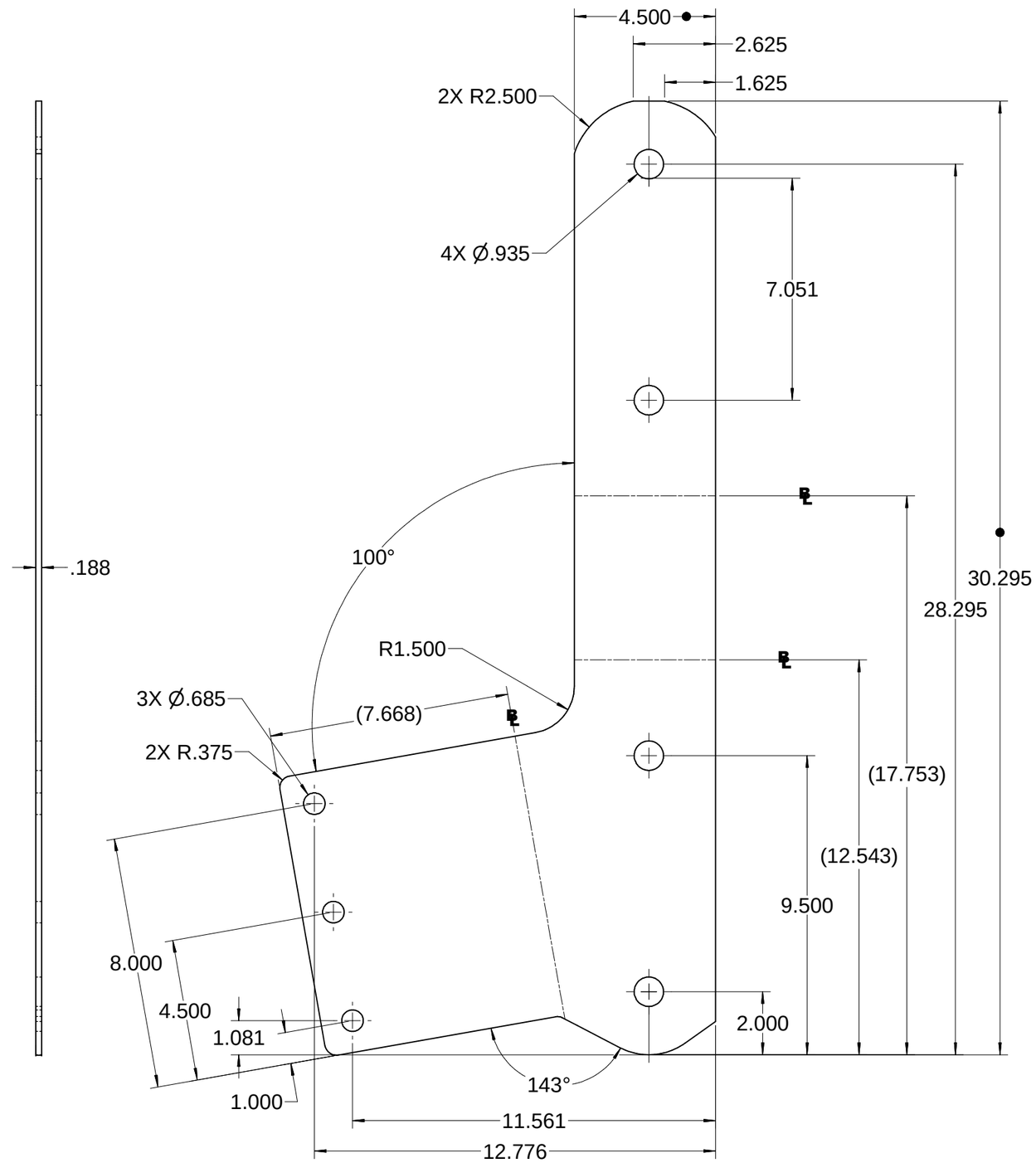

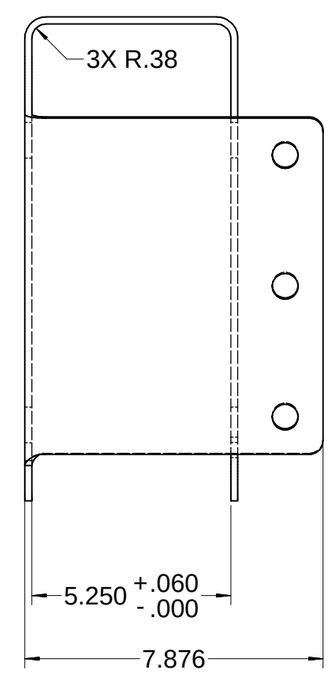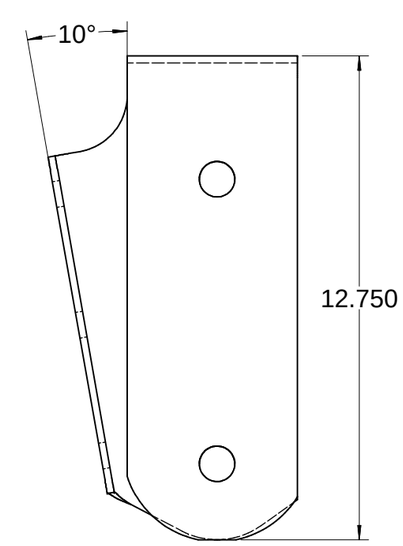
NOTES
1. MATERAL: 3/16" A36
2. WEIGHT: 11.1 LBS (5.0 kg)
3. ALL ROUNDS AND FILLETS TO BE .375 UNLESS OTHERWISE NOTED
4. • DENOTES QUALIFYING DIMENSION
5. 002238-1 SHOWN, 002238-2 OPPOSITE HAND
6. 002238-B DENOTES BLANK